This Base Manual covers all International Commerical Combination/Convection Microwave Ovens with 230 V, 50 Hz. Refer to individual Technical Sheet for information on specific models.

ACE530
UACE530
DS30E
UDS30E
UCA2000NT

Service

International Commercial Combination/Convection Microwave Oven with 230 V, 50 Hz

Service Manual for
Amana®

This manual is to be used by qualified appliance technicians only. Amana does not assume any responsibility for property damage or personal injury for improper service procedures done by an unqualified person.

Amana®

RS5320016
Revision 0
December 2001

Important Information

Pride and workmanship go into every product to provide our customers with quality products. It is possible, however, that during its lifetime a product may require service. Products should be serviced only by a qualified service technician who is familiar with the safety procedures required in the repair and who is equipped with the proper tools, parts, testing instruments and the appropriate service manual. **REVIEW ALL SERVICE INFORMATION IN THE APPROPRIATE SERVICE MANUAL BEFORE BEGINNING REPAIRS.**

Important Notices for Consumers and Servicers

WARNING

To avoid risk of serious injury or death, repairs should not be attempted by an unauthorized personal, dangerous conditions (such as exposure to electrical shock) may result.

CAUTION

Amana will not be responsible for any injury or property damage from improper service procedures. If preforming service on your own product, assume responsibility for any personal injury or property damage which may result.

To locate an authorized servicer, please consult your telephone book or the dealer from whom you purchased this product. For further assistance, please contact:

CONSUMER AFFAIRS DEPT. AMANA AMANA, IOWA 52204	**OR** **CALL**	1-319-622-5511 and ask for Consumer Affairs

If outside the United States contact:

AMANA
ATTN: CONSUMER AFFAIRS DEPT
AMANA, IOWA 52204, USA
Telephone: (319) 622-5511
Facsimile: (319) 622-2180
TELEX: 4330076 AMANA
CABLE: "AMANA", AMANA, IOWA, USA

Recognize Safety Symbols, Words, and Labels

DANGER

DANGER - Immediate hazards which **WILL** result in severe personal injury or death.

WARNING

WARNING - Hazards or unsafe practices which **COULD** result in severe personal injury or death.

CAUTION

CAUTION - Hazards or unsafe practices which **COULD** result in minor personal injury or product or property damage.

Table of Contents

Important Information 2
Important Product Information 4
Important Safety Information 5
Product Information
- Strirrer Blade 8
- Blower/Fan Assembly 8
- Stirrer Cover 8
- Door Interlock and Monitoring Switch 8
- Transformer High Voltage 8
- High Voltage Capacitor 8
- High Voltage Diode (Rectifier) 8
- Magnetron 8
- Thermal Protectors 8
- Touch Panels 8
- Triacs 8
- RTD (Resistive Thermal Device) 8
- Heating Elements 8

Component Testing Procedures 9
Test Modes
- Microwave Power Test 13
- Temperature Chart 13
- Convection Temperature Test 14
- Convection Temperature Calibration 14

Microwave Leakage Test 15
- Equipment 15
- Procedure For Measuring Radiation Leakage 15
- Measurement With the Outer Panel Removed 15
- Measurement With a Fully Assembled Oven 15
- Record Keeping and Notification After Measurement 15

Display Diagnostics
- Error Codes 16

Service Test 17
Troubleshooting
- Power up 19
- Preheat/Convection Condition 19
- Microwave Condition 20

Disassembly
- Door Handle 21
- Outer Door 21
- Inner Door Assembly 21
- Hinge 21
- Outer Case 22
- Back Panel 22
- Stirrer Cover 22
- RTD (Resistance Thermal Device) 22
- Top Touch Panel Assembly 22
- Side Touch Panel Assembly 23
- High Voltage Circuit Board 23
- Interlock Switch Module 23
  - Adjustment 23
- Display Module 24
- Magnetron 24
- Magnetron, Control, and Fan Thermal Cutout (TCO) 24
- Triacs 24
- Microwave Blower Wheel and Motor 24
- Fan Blade 25
- Transformer 25
- Capacitor 25
- Heater Box 25
- Heating Elements 25
- Convection Fan and Motor 25
- Fuse 25
- Power Cord 26
- Light Socket 26
- Line Filter 26
- Replacing Oven Light Bulb 26

Component Location 27
Appendix A
- Owner's Manual A-2

Important Product Information

⚠ WARNING

Precautions to be observed before and during servicing to avoid possible exposure to excessive microwave energy, or electrical shock disconnect power to oven.

Do not operate or allow oven to be operated with door open.

Make the following safety checks on all ovens to be serviced before activating the magnetron or other microwave source, and make repairs as necessary:

- Interlock operation
- Proper door closing
- Seal and sealing surfaces (arcing, wear, and other damage)
- Damage to or loosening of hinges and latches
- Evidence of dropping or abuse

Before turning on microwave power for any service test or inspection within the microwave generating compartments, check the magnetron, waveguide or transmission line, and cavity for proper alignment, integrity, and connections.

Any failed or misadjusted components in the interlock, monitor, door seal, and microwave generation and transmission systems shall be repaired, replaced or adjusted by procedures described in this manual before oven is released to the consumer.

Check microwave leakage to verify compliance with the federal performance standard should be performed on each oven prior to release to the consumer.

WIRING

Good service practice is to never route wiring over terminals and/or sharp edges. This applies to any wiring without regard to the circuit voltage. Wire insulation material and thickness is designed and regulated for electrical spacing purpose only, but cannot always be relied upon because of possible cuts and/or abrasions, which can occur during servicing.

⚠ WARNING

To avoid risk of electrical shock, personal injury or death; verify earthing instructions are followed.

Earthing Instructions

⚠ WARNING

Do not remove earthing prong when installing earthed appliance in a home or business that does not have three wire earthing receptacle, under no condition is earthing prong to be cut off or removed. It is the personal responsibility of the consumer to contact a qualified electrician and have properly earthed three prong wall receptacle installed in accordance with appropriate electrical codes

Should a two prong adapter plug be required temporarily it is the personal responsibility of the consumer to have it replaced with properly earthed three prong receptacle or the two prong adapter properly earthed by a qualified electrician in accordance with appropriate electrical codes.

Servicing of Earthed Products

The standard accepted color coding for earthing wires is GREEN or GREEN WITH YELLOW STRIPE. These earth leads are NOT to be used as current carrying conductors. It is extremely important that the technician replace any and all earths prior to completion of the service call. Under no condition should earth wire be left off causing a potential hazard to technicians and consumer.

PRECAUTIONS TO AVOID POSSIBLE EXPOSURE TO EXCESSIVE MICROWAVE ENERGY

(a) **DO NOT** attempt to operate this oven with the door open since open-door operation can result in harmful exposure to microwave energy. It is important not to defeat or tamper with the safety interlocks.

(b) **DO NOT** place any object between the oven front face and the door or allow soil or cleaner residue to accumulate on sealing surfaces.

(c) **DO NOT** operate the oven if it is damaged. It is particularly important that the oven door close properly and that there is no damage to the: (a) Door (bent), (b) hinges and latches (broken or loosened), (c) door seals and sealing surfaces.

(d) The oven should **NOT** be adjusted or repaired by anyone except properly qualified service personnel.

PRECAUTIONS A PRENDRE POUR EVITER LES RISQUES D'EXPOSITION A DES QUANTITES EXCESSIVES D'ENERGIE MICRO-ONDE

(a) **NE PAS** essayer de faire marcher le four avec la porte ouverte car cela risque d'exposer l'utilisateur à une quantité nocive d'énergie micro-onde. Ne jamais supprimer ou altérer les verrouillages de sécurité.

(b) **NE RIEN METTRE** entre la face avant du four et la porte et ne pas laisser de saletés ou de produits de nettoyage s'accumuler sur les surfaces d'étanchéité.

(c) **NE JAMAIS** faire fonctionner le four s'il est endommagé. Il est tout particulièrement important que la porte du four se ferme correctement et que les éléments suivants fonctionnent sans problème : a) la porte (faussée), b) les charnières et les verrouillages (cassés ou desserres), c) les joints et les surfaces d'étanchéité de la porte.

(d) Le four **NE DOIT ETRE** réparé que par des réparateurs qualifiés.

PRECAUCIONES PARA EVITAR LA POSIBLE EXPOSICION EXCESIVA A LA ENERGIA DE MICROONDAS

(a) **NO** intente hacer funcionar este horno con la puerta abierta ya que podría resultar en una exposición dañina a la energía de microondas. Es muy importante no pasar por alto o averiar los interruptores de seguridad.

(b) **NO** coloque ningún objeto entre el frente del horno y la puerta. Tampoco permita que suciedad o residuos de limpiador se acumulen en las superficies de sellado del aparato.

(c) **NO** haga funcionar el horno si éste estuviera averiado. Es de particular importancia que la puerta del horno se cierre correctamente y que no existan daños en: (a) la puerta (dobladuras), (b) las bisagras y el pestillo (rotos o flojos), (c) los sellos de las puertas y otras superficies de sellado.

(d) El horno **NO** deberá ser ajustado o reparado por ninguna persona excepto personal de servicio propiamente calificado.

VORSICHTSMASSNAHMEN ZUM SCHUTZ GEGEN MIKROWELLENSTRAHLUNG

(a) **NICHT** versuchen, den Herd mit offener Tür zu betreiben, da Sie dadurch schädlicher Mikrowellenstrahlung ausgesetzt werden können. Auf keinen Fall die Sicherheitsverriegelung unwirksam machen oder ändern.

(b) **KEINE** Gegenstände zwischen Herd und Tür einklemmen oder Schmutz und Rückstände von Reinigungsmitteln auf den Dichtflächen sich ansammeln lassen.

(c) **KEINEN** beschädigten Herd benutzen. Es ist besonders wichtig, daß die Herdtür richtig schließt und die folgenden Teile nicht beschädigt sind: (a) Tür (z.B. verbogen), (b) Scharniere und Klinken (z.B. gebrochen oder lose), (c) Türdichtungen und Dichtflächen.

(d) Das Gerät **NUR** von qualifiziertem Kundendienstpersonal reparieren lassen.

Important Safety Information

VAROITUS MIKROAALTOSÄTEILYÄ

Käyttäjä ei saa joutua alttiiksi mikroaaltoenergialle, jota voi säteillä magnetronista tai muusta mikroaaltoja kehittävästä laitteesta, jos sitä käytetään väärin tai jos se kytketään väärin. Kaikkien mikroaaltoliitäntöjen sekä syöttöettä ulostulopuolella, aaltoputkien laippojen ja tiivisteiden tulee olla varmistettuja. Mikroaaltouunia ei saa koskaan käyttää ilman kuormaa, jossa mikroaaltoenergiaa kuluu. Avoimeen aaltoputkeen tai antenniin ei saa koskaan katsoa virran ollessa kytkettynä.

VARNING FÖR MIKROVÅGSSTRÅLNING

Mikrovågsenergi kan stråla från magnetronen eller från annan mikrovågsgenererande anordning om den används eller ansluts felaktigt. Alla anslutningar för mikrovåg, såsom flänsar och tätningar måste vara betryggande ur säkerhetssynpunkt. Starta aldrig anordningen utan mikrovågsabsorberande belastning. Mikrovågsstrålning från en öppen vågledare eller antenn har sådan strålningstäthet att uppenbar skaderisk föreligger.

ADVARSEL FOR MIKROBØLGESTRALING

Mikrobølgeenergi kan stråle fra magnetronen eller annen mikrobølgeproduserende anordning ved feilkopling eller feil bruk. Alle mikrobølgeinntak og -uttaksforbindelser, flenser og pakninger, må være sikkerhetsmessig betryggende utført. Anordningen må aldri startes uten mikrobølgeabsorberende belastning. Se aldri inn mot en åpen bølgeleder eller antenne mens apparatet er i drift.

FORSIGTIG MIKROBØLGESTRÅLING

Undgå at blive udsat for stråling fra mikrobølgegeneratoren eller andre dele som fører mikrobølgeenergi.

PRECAUZIONI PER EVITARE L'EVENTUALE ECCESSIVA ESPOSIZIONE ALLE MICROONDE

(a) **NON** cercare di far funzionare questo forno con lo sportello aperto: ciò può causare l'esposizione nociva alle microonde. È importante non danneggiare o manomettere i dispositivi di sicurezza.
(b) **NON** porre alcun oggetto fra il lato anteriore del forno e lo sportello o permettere il depositarsi di sporcizia o residui sulle superfici di tenuta.
(c) **NON** usare un forno danneggiato. È molto importante che lo sportello del forno si chiuda bene e che non vi siano danni a: (a) sportello (piegato); (b) cardini e dispositivi di chiusura (rotti o allentati); (c) guarnizioni dello sportello e delle superfici di tenuta.
(d) Il forno va regolato o riparato **ESCLUSIVAMENTE** da personale d'assistenza debitamente qualificato.

VOORZORGSMAATREGELEN TER VOORKOMING VAN MOGELIJKE BLOOTSTELLING AAN OVERMATIGE MICROGOLFENERGIE

(a) Probeer **NIET** om deze magnetron met de deur open te gebruiken. daar gebruik met open deur schadelijke blootstelling aan microgolfenergie ten gevolge kan hebben. Het is belangrijk dat u de veiligheidssluitingen nooit onklaar maakt of ermee knoeit.
(b) Plaats **GEEN** voorwerpen tussen de voorkant van de oven en de deur. Zorg dat geen vuil of schoonmaakmiddel op de sluitvlakken achterblijft.
(c) Gebruik de magnetron **NIET** indien hij beschadigd is. Het is vooral belangrijk dat de deur goed sluit en dat er geen beschadigingen zijn aan: (a) de deur (verbogen), (b) de scharnieren en sloten (gebroken of los). (c) de deurdafichtingen en sluitvlakken.
(d) De magnetron mag **UITSLUITEND** door daartoe bevoegd servicepersoneel bijgesteld en gerepareerd worden.

Product Information

Stirrer Blade

Distributes microwave energy throughout the cavity.

Blower/Fan Assembly

Circulates cooling air throughout the convection or microwave oven compartment and cavity.

Stirrer Cover

Covers and protects the stirrer blade assembly.

Door Interlock and Monitoring Switch

NOTE: When the line fuse is blown the Interlock Switch Assembly must be replaced.

Interlock switch (assembly) mounts behind oven cavity front bulkhead. It is actuated by door hook and guide attached to the door.

Monitoring switch (contacts 7 and 8) is actuated by the door guide.

The secondary interlock switch (contacts 2 and 3) and primary interlock switch (contacts 4 and 5) are actuated by the door hook.

The secondary interlock switch is in series with the interlock monitoring switch in the monitor circuit.

If a malfunction occurs in the secondary interlock when door opens, current will flow through the monitor switch causing the oven fuse to open.

If a faulty door interlock switch has allowed current through the monitor switch, the switch assembly must be replaced (see interlock switch testing) before replacing fuse.

⚠ DANGER

To avoid severe personal injury or death avoid contacting any high voltage parts. The capacitors are at high voltage (4000 volt) potential and it is extremely important that they be grounded before handling.

Transformer High Voltage

High voltage transformer is used in this unit, which supplies high voltage A.C. for operation of the magnetron tube.

High Voltage Capacitor

Doubles the A.C. output voltage from the high voltage transformer.

High Voltage Diode (Rectifier)

Is connected at the output side of the high voltage capacitor. It changes voltage from A.C. to D.C. It passes current in one direction and blocks it in the other. Also called a rectifier.

Magnetron

With filament voltage and high D.C. voltage from the output of the H.V. capacitor, diode junction the magnetron will put out an electomagnetic radio frequency of 2450 MHz to heat the food load in the oven.

Thermal Protectors

At a predetermined temperature the thermal cut-outs will open or close. The oven will indicate an error code in the display, initiate cooling fan operation, or prevent the generation of microwave energy.

- Magnetron thermal cut-out is mounted directly on the body of the magnetron
- Fan thermal cut-out is mounted directly on the exhaust duct
- Control thermal cut-out is mounted directly on the heater box

Touch Panels

Allows consumer operation and programming of oven.

Triacs

Triacs are controlled by high voltage circuit boards. Triacs control one side of the power line going to the high voltage power transformer and heating elements.

- Microwave triacs, heating elements A, and B triacs are mounted inside oven chassis behind oven cavity front bulkhead

RTD (Resistance Thermal Device)

Senses temperature inside oven cavity.

Heating Elements

Heating elements are used to produce convection heat.

Component Testing Procedures

⚠ WARNING

To avoid risk of electrical shock, personal injury or death; disconnect power to oven and discharge capacitor before servicing, unless testing requires power.

Illustration	Component	Test	Results
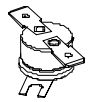	Thermal cutout	Disconnect all wires from TCO. Measure resistance across terminals. Control TCO..... Fan TCO..... Magnetron TCO.....	 Open at 300°F (149°C) and closed at 257°F (125°C) Open at 125°F (52°C) and closed at 160°F (71°C) Open at 235°F (113°C) and closed at 150°F (66°C)
	Diode	**Discharge Capacitor** Remove diode lead from capacitor and connect ohmmeter. Reverse leads for second test.	Infinite resistance should be measured in one direction and 50KΩ or more in the opposite direction. **NOTE:** Ohmmeter must contain a battery of 6 volts minimum.
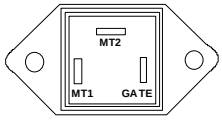	Triac	Disconnect wires to triac. Measure resistance from: MT1 to MT2 ..... MT1 to Gate..... MT2 to Gate..... All terminals to ground	**Caution - Do not operate oven with wire to terminal MT2 removed.** Infinite Approximately 15 Ω, then reverse meter leads 30 Ω Infinite Infinite
Triac 1 (top) is for front element Triac 2 (middle) is for rear element Triac 3 (bottom) is for microwave		Measure voltage from: MT1 to Gate	0.8 VAC when energized If no voltage, check H.V. board and wiring.
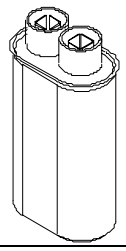	Capacitor	**Discharge Capacitor** Remove wires from capacitor terminals and connect ohmmeter, set on highest resistance scale to terminals. Also check between each terminal and capacitor case.....	 Between Terminals: Meter should momentarily deflect towards zero then return to over 5 MΩ. If no deflection occurs, or if continuous deflection occurs, replace capacitor. Terminal to Case: Infinite resistance
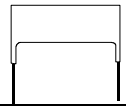	Snubber assembly	Disconnect wires to snubber. Measure resistance across terminals.....	 Infinite
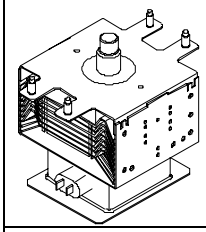	Magnetron	**Discharge Capacitor** Remove wires from magnetron and connect ohmmeter to terminals. Also check between each terminal and ground.	Between Terminals: Less than 1 Ω Each terminal to ground measures Infinite resistance. **Note:** This test is not conclusive. If oven does not heat and all other components test good replace the magnetron and retest.
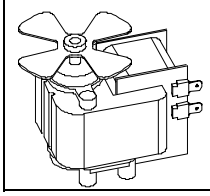	Microwave blower motor	Remove all wires from motor. Measure resistance across coil.....	 Approximately 30 Ω

Component Testing Procedures

⚠ WARNING

To avoid risk of electrical shock, personal injury or death; disconnect power to oven and discharge capacitor before servicing, unless testing requires power.

Illustration	Component	Test	Results
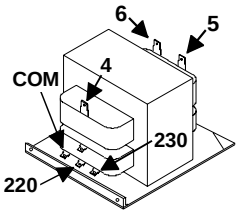	Transformer	**Discharge Capacitor** Remove all wires from terminals. Measure resistance from: 230 to COM ..... 220 to COM ..... 230 to Ground..... 220 to Ground..... Terminal 5 to 6..... Terminal 4 to Ground.....	 < 1.5 Ω < 1.5 Ω Infinite Infinite < 1 Ω Approximately 70 Ω
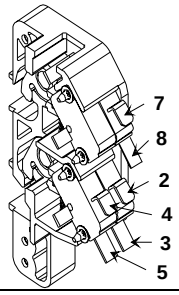	Interlock switch 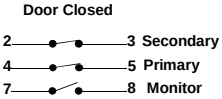	Disconnect wires to switch. With door open measure resistance from: Terminal 2 to 3..... Terminal 4 to 5..... Terminal 7 to 8..... With door closed measure resistance from: Terminal 2 to 3..... Terminal 4 to 5..... Terminal 7 to 8.....	 Infinite Infinite Indicates continuity Indicates continuity Indicates continuity Infinite
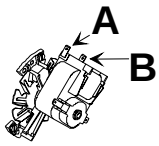	Convection blower motor	Remove wires from motor. Measure resistance across terminals A and B	 Approximately 20 Ω
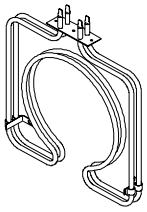	Heating element assembly	Disconnect wires from terminals. Measure resistance across heating element. Front element 1200 W ..... Rear element 1500 W ..... Front element 1100 W ..... Rear element 1100 W	 Indicates continuity 44 Ω 35 Ω 48 Ω 48 Ω
	Resistance thermal device (RTD)	Temperature 0°C (32°F)..... 177°C (350°F).....	Resistance 1000 Ω 1654 Ω
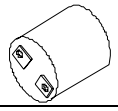	Lamp receptacle	Test continuity of receptacle terminals.	Indicates continuity with bulb screwed in.
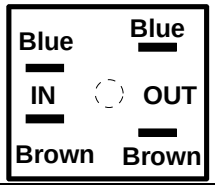	Line filter	Disconnect wire from terminals. Measure resistance of the following terminals: Blue to Blue..... Brown to Brown.....	 < 1 Ω < 1 Ω

Component Testing Procedures

⚠ WARNING

To avoid risk of electrical shock, personal injury or death; disconnect power to oven and discharge capacitor before servicing, unless testing requires power.

Illustration	Component	Test	Results		
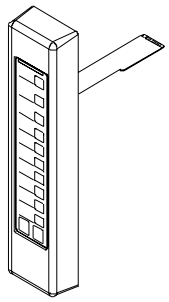	Side touch panel	Continuity is indicated as 100 Ω and below. 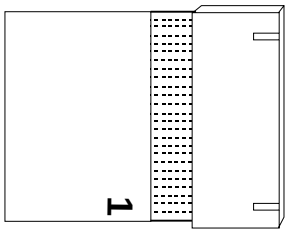	**Pad**	**Trace**	**Measurement**
			1	3 & 5	Continuity
			2	3 & 6	Continuity
			3	3 & 7	Continuity
			4	3 & 8	Continuity
			5	3 & 9	Continuity
			6	4 & 5	Continuity
			7	4 & 6	Continuity
			8	4 & 7	Continuity
			9	4 & 8	Continuity
			0	4 & 9	Continuity
			Start	5 & 6	Continuity
			Stop/Reset	6 & 9	Continuity
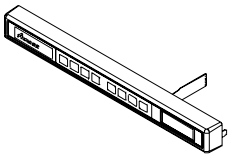	Top touch panel	Continuity is indicated as 100 Ω and below. 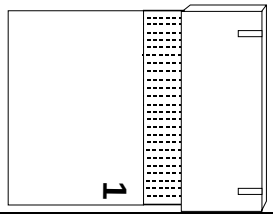	**Pad**	**Trace**	**Measurement**
			Preheat	3 & 4	Continuity
			Time Entry	5 & 7	Continuity
			Temp Entry	7 & 8	Continuity
			Power Level	5 & 8	Continuity
			Stage	5 & 9	Continuity
			Program Save	6 & 7	Continuity
			Hidden Pad	8 & 9	Continuity
Wire harness	High voltage board to display module harness	Test continuity of wires.	Indicates continuity		

Display board

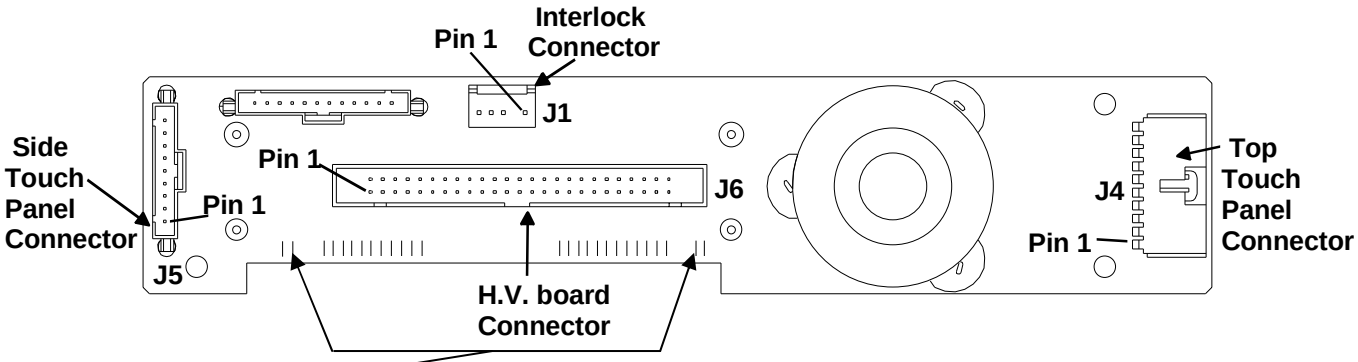

3.5 VAC should be indicated whenever the oven is plugged into a power supply.

If voltage is present and no display is indicated, replace display board.
If no voltage is present, check wire harness connections and H.V. board.

Component Testing Procedures

WARNING

To avoid risk of electrical shock, personal injury or death; disconnect power to oven and discharge capacitor before servicing, unless testing requires power.

H.V. board

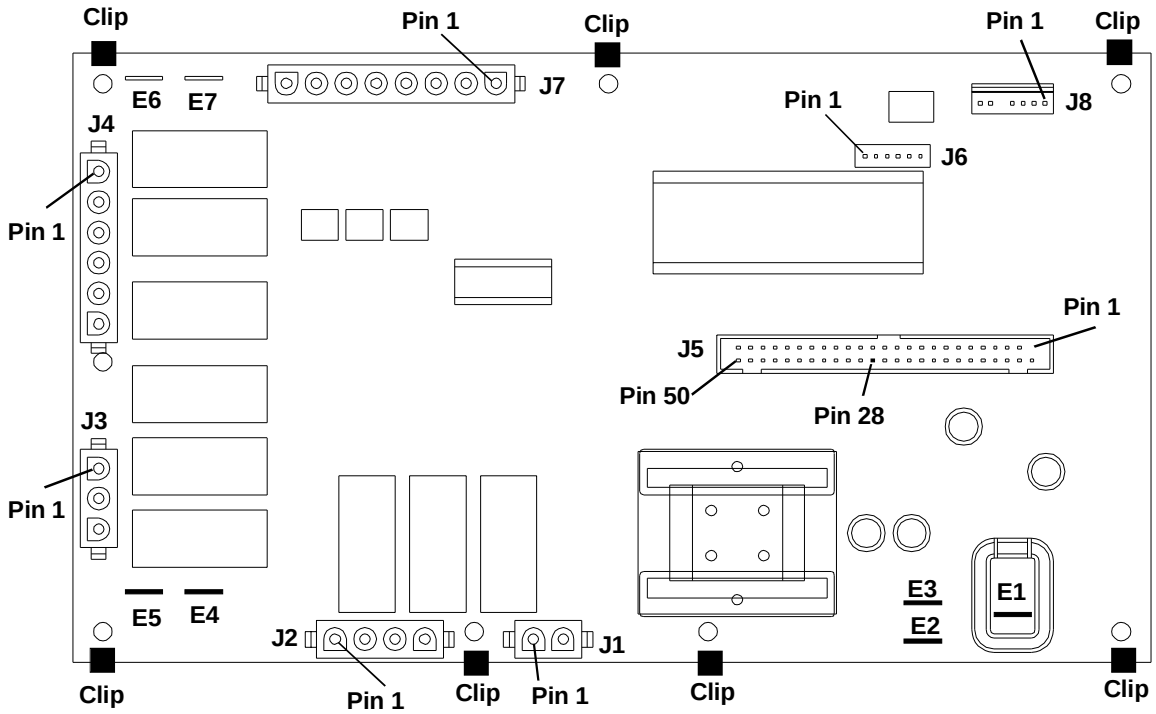

In straight convection mode, both elements operate simultaneously.
In combination mode, the rear element will operate simultaneously with either the microwave or front element.

Function	Test Set-Up	Meter Setting	Probe Placement	Results
Input to H.V. board	At H.V. board	Volts	J1 pin 1 (Black wire) & J1 pin 2 (Red wire)	Line voltage
Output to display board	Disconnect J5 connector	Volts	J5 pin 28 & J5 pin 50	Ě 24 VDC

NOTE: For the following test, place oven in Service Test Mode (see page 27).

Relay	Function	Test Set-Up	Meter Setting	Probe Placement	Results
K1	Cooling fan	Disconnect J2 connector	Ohms	J1 pin 1 (Black wire) & J2 pin 4	Test mode 5 off Ě no continuity Test mode 5 on Ě < 1 Ω
K2	Convection motor	Disconnect J2 connector	Ohms	J1 pin 1 (Black wire) & J2 pin 3	Test mode 4 off Ě no continuity Test mode 4 on Ě < 1 Ω
K3	Cavity light	Disconnect J2 connector	Ohms	J2 pin 1 & J2 pin 2	Test mode 6 off Ě no continuity Test mode 6 on Ě < 1 Ω
K4	Heater A (front)	Disconnect J3 connector	Ohms	E4 & J3 pin 3	Test mode 2 off Ě no continuity Test mode 2 on Ě < 1 Ω
K7	Microwave	Disconnect J4 connector	Ohms	J4 pin 4 & J4 pin 5	Test mode 3 off Ě no continuity Test mode 3 on Ě < 1 Ω
K9	Heater B (rear)	Disconnect J4 connector	Ohms	E6 & J4 pin 1	Test mode 1 off Ě no continuity Test mode 1 on Ě < 1 Ω

Test Modes

Microwave Power Test

(TRADITIONAL TEST METHOD)

Test Equipment Needed:

- Amana power test kit R0157397, Fahrenheit or
- Menumaster power test kit M95D5, Centigrade.

1. Place one rack in the oven using lowest rack position.
2. Fill the plastic container to the bottom of the 1000 ml. lines with cool tap water.
3. Using the thermometer; Fahrenheit or Centigrade, stir the water, measure and record the water temperature. IMPORTANT: Initial water temperature should be approximately 20°C (60°F).
4. Place the container on the center of the oven rack and heat the water for 62 seconds.
   a. Close the door.
   b. Press Hidden Pad, 1, 3, 5, 7, 9.
   c. Press 3 to activate microwave mode.
   d. Display counts up to 62 seconds, and unit shuts off.
   e. Open the door.
5. Stir the water, measure and record the temperature of the water after heating time is completed.
6. Subtract the starting water temperature (Step 3) from the ending water temperature (Step 5) to obtain the temperature rise.
7. Refer to the Temperature Chart.

NOTES:

- The IEC-705 test method requires precision measurements and equipment. It is not practical to perform the IEC test in the field. To convert the traditional power test results to the approximate IEC-705 rating, take the traditional power test results and add 100 watts per magnetron for the unit being tested.

  Example: 900 — watts output using the traditional power test for model ACE530
  + 100 — watts (100 watts X each magnetron)
  1000 — Approximate IEC-705 results

- Always perform power test three times for accuracy, changing the water after each test is performed.
- Variation or errors in the test procedure will cause a variance in the temperature rise. Additional power tests should be made if temperature rise appears marginal.
- Low line voltage will cause lower temperature rise.

Temperature Chart

ONE MINUTE, TWO SECONDS run time chart for units less than 1550 watts cooking power.

DT (°F)	Cooking Power Output	DT (°F)	Cooking Power Output
12	464	20	775
13	504	21	814
14	542	22	852
15	581	23	891
16	620	24	930
17	659	25	969
18	697	26	1007
19	736		

DT (°C)	Cooking Power Output	DT (°C)	Cooking Power Output
7	490	12	840
8	560	13	910
9	630	14	980
10	700	15	1050
11	770		

Test Modes

Convection Temperature Test

NOTE: It is absolutely necessary to own and use a thermocouple type oven tester to accurately measure oven temperature. No other type of thermometer can take its place.

NOTE: Before testing an oven to check calibration, inspect the RTD for proper mounting.

1. Place one wire rack in center position. Remove any other racks and utensils.
2. Clip thermocouple to the center rack and run lead outside oven door, or wrap thermocouple around rack and have tip of thermocouple extend upward towards top of cavity approximately 1".
3. Press *PREHEAT ON/OFF* pad.
4. Press *PROGRAM SAVE* pad.
5. Press *TEMP* pad.
6. Enter 230°C (450°F).
7. Allow oven to cycle one time.
8. Record high and low peaks from next two cycles.

NOTE: Display **does not** indicate if heating elements are on or off.

Fahrenheit Example:

		LOW		HIGH
Cycle	1	440°F		460°F
Cycle	2	439°F		461°F
		879°F	+	921°F = 1800°F

1800°F / 4 = 450°F average temperature

Celsius Example:

		LOW		HIGH
Cycle	1	230°C		240°C
Cycle	2	230°C		240°C
		450°C	+	480°C = 930°C

930°C / 4 = 230°C average temperature

If the average temperature is too high or too low the oven temperature offset needs to be calibrated.

Convection Temperature Calibration

NOTE: It is normal for the average oven temperature to vary from the oven setting by as much as 25°F (14°C). Difference will not effect cooking since recipes are written with this difference in mind.

Calibration

NOTE: Door must be closed.

1. Press *HIDDEN PAD*.
2. Press pads *1,3,5,7, 9.*
3. Press *"0"* pad.

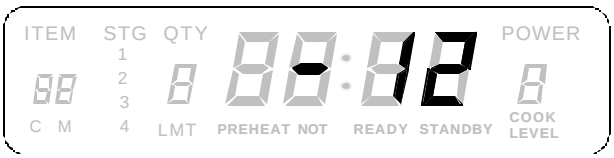

NOTE: Display will show the current offset setting.

4. Press the *"0"* pad to change the offset.

Fahrenheit

NOTE: Offset temperature range is +40°F to -40°F and advances in 2 and 3° increments.

Celsius

NOTE: Offset temperature range is +22°C to -22°C and advances in 1 and 2° increments.

5. Press *STOP/RESET* pad to save offset changes.

NOTE: Retest the oven after any offset changes are made.

Fahrenheit Example:

- Oven temperature is set for 450°F.
- Average of temperature test is 475°F.
- Offset setting must be reduced by 25°F.
- If offset is shown as 10°, press the "0" pad until -15 is shown in the display (10 – 25 = -15).

Celsius Example:

- Oven temperature is set for 230°C.
- Average of temperature test is 240°C.
- Offset setting must be reduced by 10°C.
- If offset is shown as 5°, press the "0" pad until -5 is shown in the display (5 – 10= -5).

Microwave Leakage Test

⚠ WARNING

Check for radiation leakage after servicing. Should the leakage be more than 4mW/cm^2 inform Amana immediately. After repairing or replacing any radiation safety device, keep a written record for future reference, as required by D.H.H.S. and HEW regulations. This requirement must be strictly observed. In addition, the leakage reading must be recorded on the service repair ticket while at the customer's location.

Equipment

- Electromagnetic radiation monitor
- 600 cc glass beaker

Procedure For Measuring Radiation Leakage

Note before measuring -

- Do not exceed meter full scale deflection. Leak monitor should initially be set to the highest scale.
- To prevent false readings the test probe should be held by the grip portion of the handle only.
- The scan speed is equal to one inch per antenna revolution or one inch per second if antenna speed is unknown.
- Areas to be checked are all door seal areas and any venting parts.
- Leakage with the outer panel removed, 4mW/cm2 or less.
- Leakage for fully assembled oven with door normally closed, 4mW/cm2 or less.
- Leakage for a fully assembly oven (before the latch switch (primary) is interrupted) while pulling the door, 4mW/cm2 or less.

1. Open the oven door and verify that there is only one rack in place on the bottom rack hooks.
2. Pour 275 ± 15 cc (9 oz ± 1/2 oz) of 20 ± 5°C. (68± 9°F.) water in a glass beaker which is graduated to 600 cc and place the beaker in the center of rack.
3. Set the radiation monitor to 2450 MHz and use it following the manufacturer's recommended test procedure to assure correct results.
4. While measuring the leakage, always use the two inch (5 cm) spacer supplied with the probe.
5. Press the start pad or turn on the timer and with the magnetron oscillating, measure the leakage by holding the probe perpendicular to the surface being measured.

Measurement With the Outer Case Removed

⚠ DANGER

To avoid risk of personal injury or death avoid contacting any high voltage components.

Whenever you replace the magnetron, measure for radiation leakage before the outer case is installed and after all necessary components are replaced or adjusted. Special care should be taken in measuring around the magnetron.

Measurement With a Fully Assembled Oven

After all components, including the outer panel are fully assembled, measure for radiation leakage around the door periphery, the door viewing window, the exhaust opening, and air inlet openings.

Record Keeping and Notification After Measurement

1. After any adjustment or repair to a microwave oven, a leakage reading must be taken. Record this leakage reading on the repair ticket even if it is zero.
2. A copy of the repair ticket and the microwave leakage reading should be kept by the repair facility.

Display Diagnostics

⚠ CAUTION

All repairs as described in this troubleshooting section are to be performed only after the caution procedures one through eight listed below have been followed.

1. Check grounding before checking for possible causes.
2. Be careful of the high voltage circuit.
3. Discharge high voltage capacitor.
4. When checking the continuity of the switches or the high voltage transformer, disconnect one lead wire from these parts and then check continuity with the AC plug removed. To do otherwise may result in a false reading or damage to your meter.
5. Do not touch any parts of the circuitry on the P.C. Board circuit since static electric discharge may damage this control panel. Always touch yourself to ground while working on this panel to discharge any static charge in your body.
6. 208/230 VAC is present in the high voltage circuit board, power relay and primary circuit of low voltage transformer.
7. When troubleshooting, be cautious of possible electrical hazard.
8. When testing convection operation, convection fan may start at any time or if oven is hot.

Error Codes

During operation, the display may show the following service codes:

NOTE: Before scheduling service for any error codes, instruct customer to unplug oven for 1 minute, reconnect power, and retest. If unit operates properly, no service call is required.

Display	Description	Corrective Action
Err1	Checksum Error	See note above. Replace H.V. board.
Err2	Hardware Problem	See note above. Verify wiring at H.V. board. If wiring is good, replace H.V. board. May be a failed Touch Panel. Verify before replacing.
Err3	Hardware Problem	See note above. Verify wiring at H.V. board. If wiring is good, replace H.V. board. May be a failed Touch Panel. Verify before replacing.
Err4	Hardware Problem	See note above. Check green jumper at J8 connector on H.V. board. If jumper is good, replace H.V. board.
Err5	Defective Touch Panel	See note above. If Touch Panel is pressed for more than 30 seconds, this error code will appear. Replace touch panel.
Err6	RAM Error	See note above. Replace H.V. board.
Err7	Error with RTD circuit If power level shows 0 - Uncalibrated ..... 1 - Shorted RTD circuit..... 2 - Open RTD circuit	See note above. Replace H.V. board. Check RTD and wiring to H.V. board. Check RTD and wiring to H.V. board.
HOT		See note above. Open TCO. Convection motor inoperative. Restricted air filter. H.V. board inoperative. Broken or loose wire.
Door	Door Interlock Primary Switch	See note above. Verify latch mechanism moves freely on door. Verify J1 connector on display board is properly seated. Test interlock switch assembly and perform door adjustment if necessary. Replace interlock switch assembly if failed.

Service Test

NOTE: Unit must be in STANDBY mode.

To Enter Service Mode, oven door must be closed.

NOTE: Pads will not beep when pressed.

Press → **Display** **Component Evaluation**

---

0 = Deactivated
1 = Activated

Indicates Service Mode

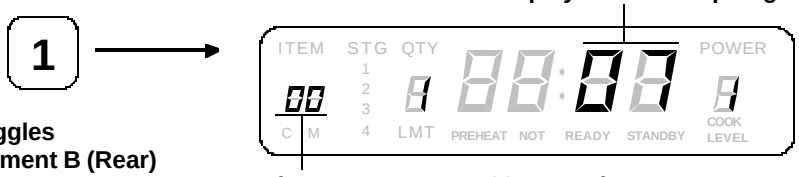

Displays actual Amperage

Toggles Element B (Rear) ON/OFF.

Timer counts up to 99 seconds.

If no Amperage, check:
- **Heating element**
- **Triac 2 (middle)**
- **H.V. board (relay K9 and triac 2 drive voltage)**
- **Wiring**

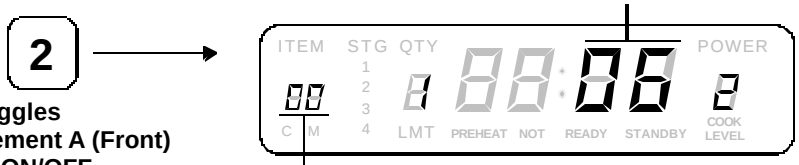

Displays actual Amperage

Toggles Element A (Front) ON/OFF.

Timer counts up to 99 seconds.

If no Amperage, check:
- **Heating element**
- **Triac 1 (top)**
- **H.V. board (relay K4 and triac 1 drive voltage)**
- **Wiring**

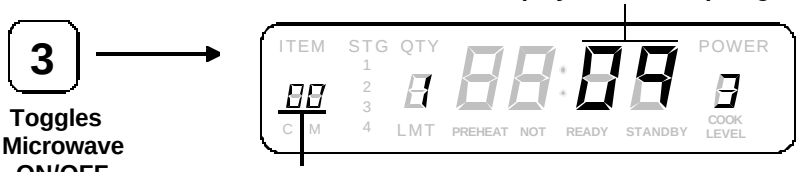

Displays actual Amperage

Toggles Microwave ON/OFF.

Timer counts up to 62 seconds and unit shuts off.

If no Amperage, check for line voltage at H.V. transformer primary winding.
If no voltage, check:
- **Interlock switch (secondary)**
- **Magnetron TCO**
- **Triac 3 (bottom)**
- **H.V. board (relay K7 and triac 3 drive voltage)**
- **Wiring**

If voltage is present, check H.V. components and wiring.

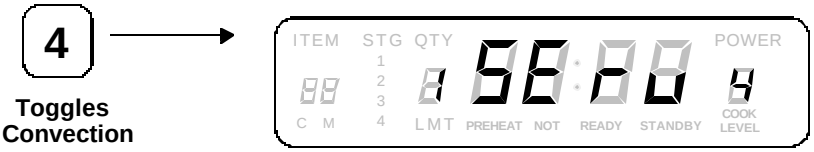

Toggles Convection Fan ON/OFF.

If no fan operation, check:
- **Convection fan motor and wheel**
- **H.V. board (relay K2)**
- **Wiring**

Service Test

Press →	Display	Component Evaluation
5 → Toggles Cooling Fan ON/OFF.		If no fan operation, check: • Cooling fan motor and wheel • H.V. board (relay K1) • Wiring
6 → Toggles Oven Light ON/OFF.		If no light operation, check: • Oven light • H.V. board (relay K3) • Wiring
7 → Displays # of Magnetron Hours.		
8 → Displays # of Door Cycles with a 1 to 1 ratio rounded to the nearest ten		
9 → Clears Hours and Cycles (press START to activate) (Resets to 0).		
0 → Displays current Temperature OFFSET.		
TEMP →	Display current oven Temperature as sensed by RTD.	

To Exit Service Mode Press STOP / RESET

Troubleshooting

Power Up

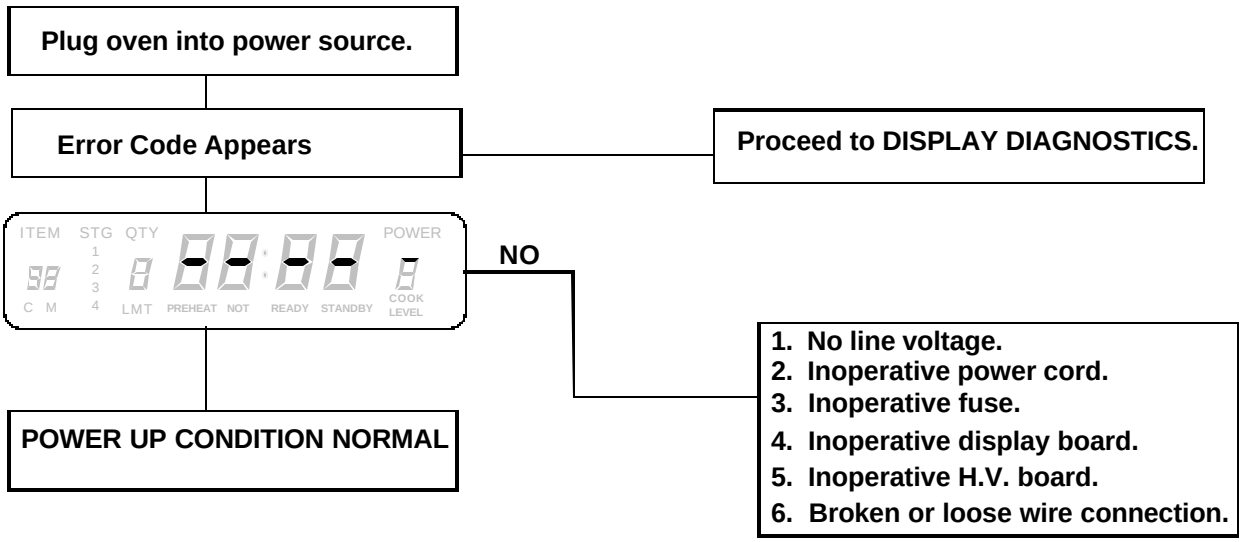

Preheat/Convection Condition

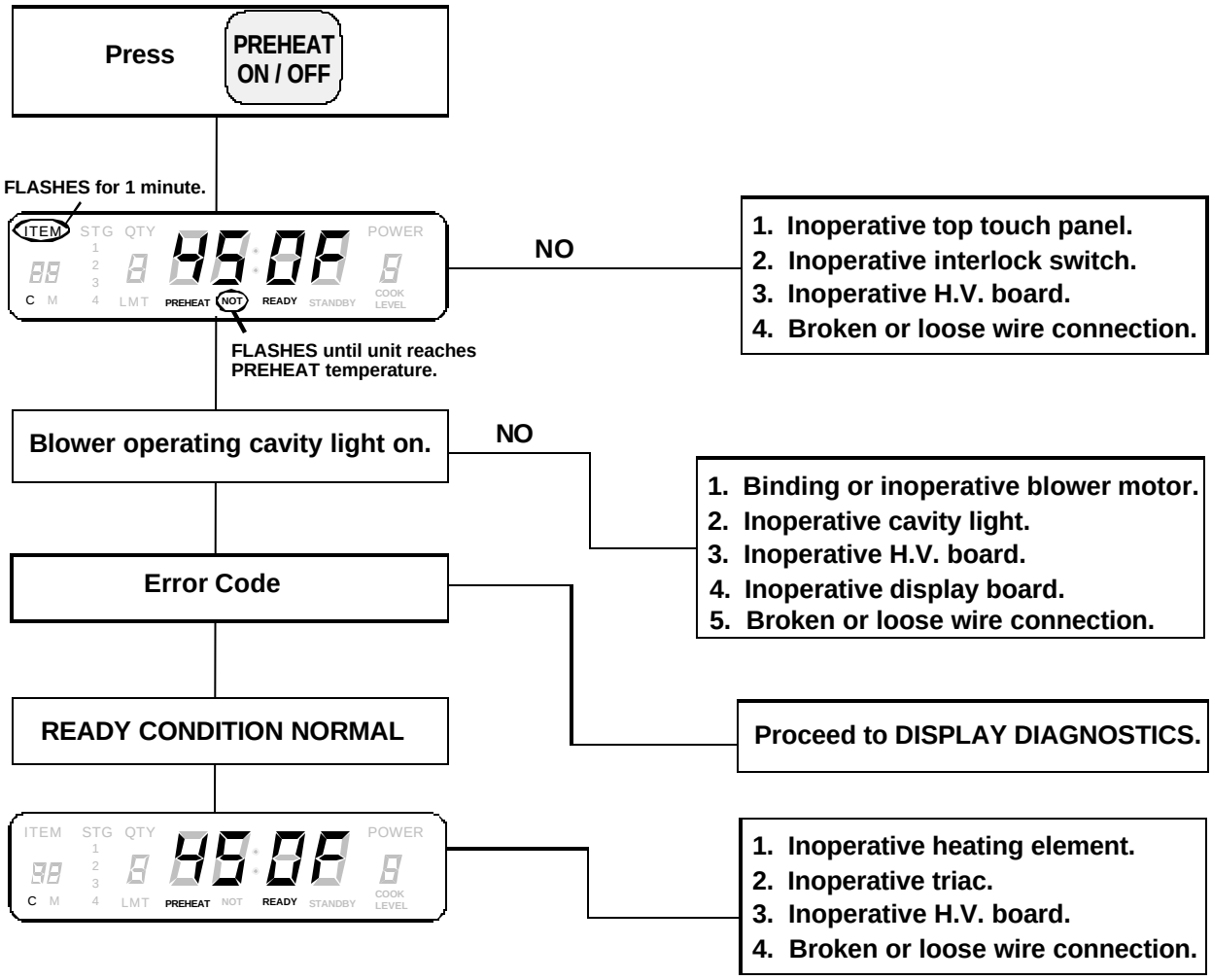

Troubleshooting

Microwave Condition

Open door, place cup of water in oven.

Close oven door.

Press PREHEAT ON / OFF | TIME **enter desired time** | TEMP **enter 70°C** | POWER LEVEL **enter desired microwave power level.**

Press START

NO

1. **Inoperative top touch panel.**
2. **Inoperative side touch panel.**
3. **Inoperative H.V. board.**
4. **Broken or loose wire connection.**

End of cycle tone sounds.

Open door and remove water. Is water heated?

NO

Heats Slowly

1. **Inoperative or misadjusted interlock switch module.**
2. **Inoperative magnetron.**
3. **Inoperative thermal cutout.**
4. **Broken or loose wire connection.**

No Heat

1. **Inoperative or misadjusted interlock switch module.**
2. **Inoperative thermal cutout.**
3. **Inoperative triac.**
4. **Inoperative diode.**
5. **Inoperative capacitor.**
6. **Inoperative H.V. transformer.**
7. **Inoperative magnetron.**
8. **Broken or loose wire connection.**

YES

MICROWAVE CONDITION OPERATING PROPERLY

Disassembly

⚠ WARNING

To avoid the risk of electrical shock, personal injury or death; disconnect power to oven and discharge capacitors before following any disassembly procedure.

Door Handle

Remove door handle by removing plactic plugs to gain access to set screws. Loosen set screws using a (3/32 inch allen screws), one located to the left of the door handle and one located on the bottom of the door handle.

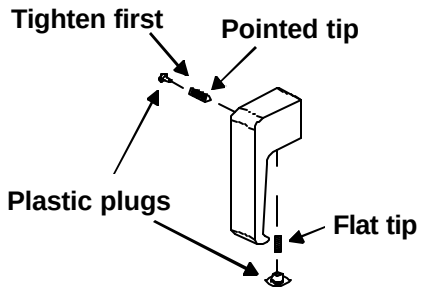

NOTE: When replacing door handle, tighten side set screw first.

NOTE: If set screws are removed, the set screw with the flat end must be used in the bottom of the door handle.

Outer Door

1. Remove door handle.
2. Remove plastic plugs covering screws with a thin flat blade screwdriver.
3. Remove crows foot screws using crows foot driver (92113P01), securing outer door to inner door assembly.
4. Remove outer door from inner door assembly.
5. Reassemble outer door in reverse order.

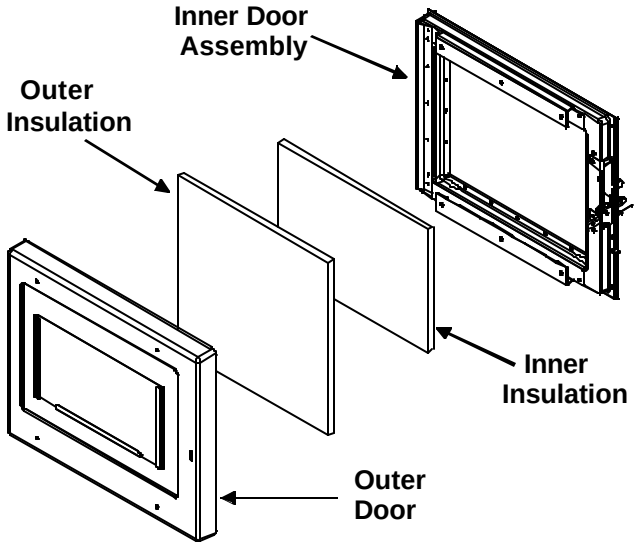

Inner Door Assembly

1. Remove door handle.
2. Remove outer door.
3. Remove insulation pads from inner door assembly.
4. Remove screws securing inner door assembly to hinge.
5. Reassemble inner door assembly in reverse order.

Hinge

1. Remove outer case.
2. Remove door handle.
3. Remove outer door assembly.
4. Remove hinge mounting screws from hinge (five on front, four on side).

NOTE: Discard foam gasket on side of hinge.

5. When reinstalling hinge mounting screws, keep the side screws loose and the front screws tight, close door, press door against oven on the hinge side and tighten side hinge mounting screws in the sequence shown below.

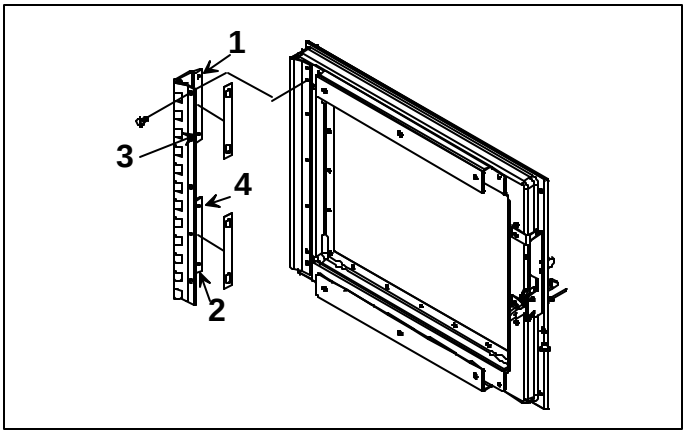

Disassembly

⚠ WARNING

To avoid the risk of electrical shock, personal injury or death; disconnect power to oven and discharge capacitors before following any disassembly procedure.

Outer Case

1. Remove screws securing outer case to chassis, see illustration below.
2. Slide outer case back and lift off.
3. Reassemble outer case in reverse order.

Back Panel

1. Remove outer case.
2. Remove screws securing back panel.
3. Reassemble back panel in reverse order.

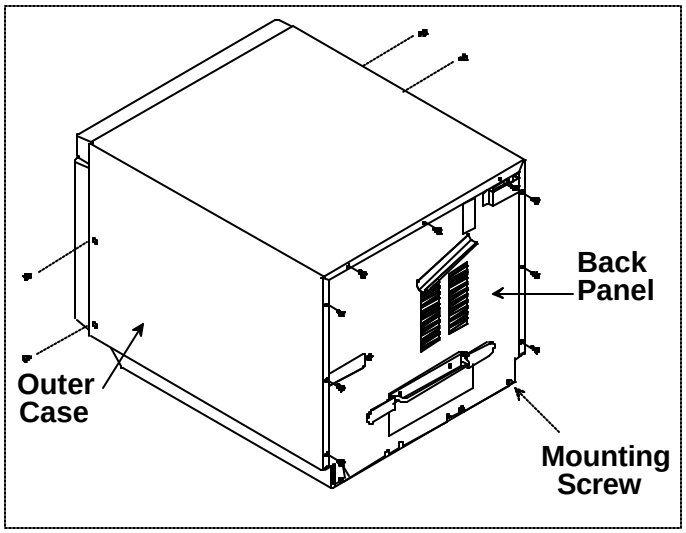

Stirrer Cover

1. See “Component Location” Figure 4, for location.
2. Unplug oven before removing stirrer cover to access stirrer assembly.
3. Loosen screw securing stirrer cover mounting clip and rotate clip to the side.
4. Slowly lower front of stirrer cover, then pull gently towards front of unit to release cover.
5. Replace stirrer cover by fitting stirrer blade on stirrer insert. Place back of stirrer cover into place, align stirrer insert onto stirrer shaft. Lift front of cover into position, rotate mounting clip into position, tighten screw.

⚠ CAUTION

If mounting clip is loose arcing will occur.

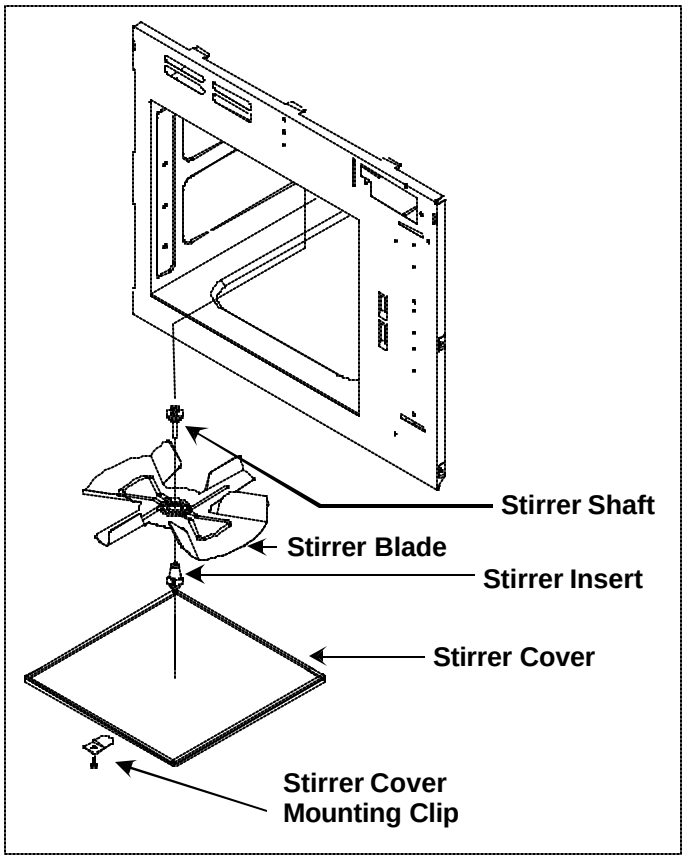

RTD (Resistance Thermal Device)

1. See “Component Location” Figure 4, for location.
2. Remove outer case.
3. Disconnect RTD harness connector.
4. Remove mounting screw located inside oven.
5. Lift RTD from top of the oven.
6. Reassemble RTD in reverse order.

Top Touch Panel Assembly

1. See “Component Location” Figure 1, for location.
2. Remove outer case.
3. Disconnect all wire connectors at display board.
4. Remove screws securing top touch panel to unit.
5. Remove screws securing display board to top touch panel assembly.
6. Reassemble touch panel in reverse order.

Disassembly

WARNING

To avoid the risk of electrical shock, personal injury or death; disconnect power to oven and discharge capacitors before following any disassembly procedure.

Side Touch Panel Assembly

1. See “Component Location” Figure 1, for location.
2. Remove outer case.
3. Remove ribbon cable from display board.
4. Remove mounting screws securing side touch panel to unit.
5. Reassemble touch panel in reverse order.

High Voltage Circuit Board

1. See “Component Location“ Figure 2, for location.
2. Remove outer case.
3. Unplug connectors.
4. Disconnect wires from terminal locations on H.V. board.
5. Release mounting clips and remove board.
6. Reassemble high voltage board in reverse order.

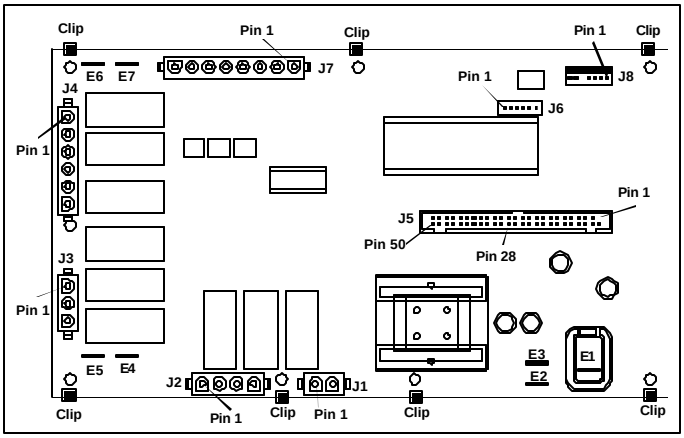

NOTE: When reassembling, verify cable connection with illustration of cable locations.

Interlock Switch Module

1. See “Component Location” Figure 2, for location.
2. Remove outer case.
3. Disconnect wiring from interlock switch assembly.
4. Remove mounting screws securing interlock switch.
5. When replacing assembly, all wires must be connected before operating oven.

NOTE: When the line fuse is blown **interlock switch module** must be replaced.

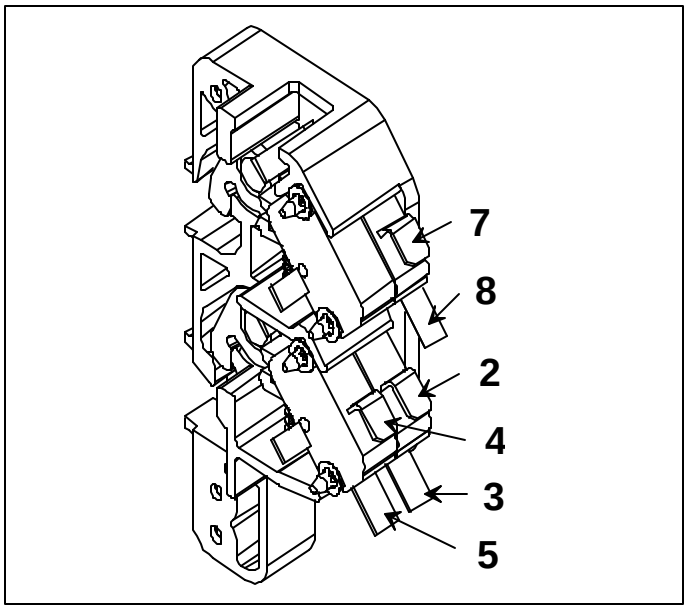

Adjustment

1. To adjust interlock switch assembly, close door.
2. Loosen bottom and top screw on the interlock switch assembly, allowing switch assembly to move in or out.
3. With door closed, push forward on interlock assembly to engage door latch. Then pull back on interlock assembly until door is "snug" against front oven cavity and tighten bottom screw first, then top screw.
4. Door will remain latched when proper adjustment is made.

NOTE: If door is not properly adjusted display will indicate *DOOR* when the door is closed.

Disassembly

WARNING

To avoid the risk of electrical shock, personal injury or death; disconnect power to oven and discharge capacitors before following any disassembly procedure.

Display Module

1. See “Component Location” Figure 1, for location.
2. Remove outer case.
3. Remove top touch panel, see Top Touch Panel Assembly procedure.
4. Reassemble display module in reverse order.

Magnetron

1. See “Component Location” Figure 3, for location.
2. Remove outer case.
3. Remove screws securing magnetron inlet cover and remove cover.
4. Remove screws securing waveguide duct.
5. Remove wires from magnetron.
6. Remove allen screws securing magnetron thermal cutout bracket to magnetron.
7. Remove magnetron mounting nuts and remove front magnetron cover bracket.
8. Remove magnetron.
9. When replacing magnetron, verify wire mesh gasket is reinstalled properly.

NOTE: When reinstalling magnetron, slide air baffle inside magnetron before mounting magnetron in place.

NOTE: Place front magnetron cover bracket in place before securing magnetron.

Magnetron, Control, and Fan Thermal Cutout (TCO)

1. See “Component Location” Figure 3, for location.
2. Remove outer case.
3. Remove wiring from selected thermal cutout.
4. Remove screws securing thermal cutout.
5. Reassemble thermal cutout in reverse order.

Triacs

1. See “Component Location” Figure 1, for location.
2. Remove outer case and back panel.
3. Remove wires from terminals of selected triac.
4. Remove screws securing triac to chassis.
5. Reassemble triac in reverse order.

Microwave Blower Wheel and Motor

1. Remove outer case and back panel.
2. Remove wiring from blower motor terminals.
3. Remove screws securing blower assembly to bracket.
4. Remove assembly from oven.
5. Loosen allen set screw securing blower wheel to motor shaft.
6. Remove blower wheel.
7. Remove screws securing motor to scroll.
8. Reassemble blower wheel and motor in reverse order.

NOTE: When reinstalling blower wheel, push blower wheel on shaft, tighten, and rotate to insure clearance between blower wheel, and blower housing.

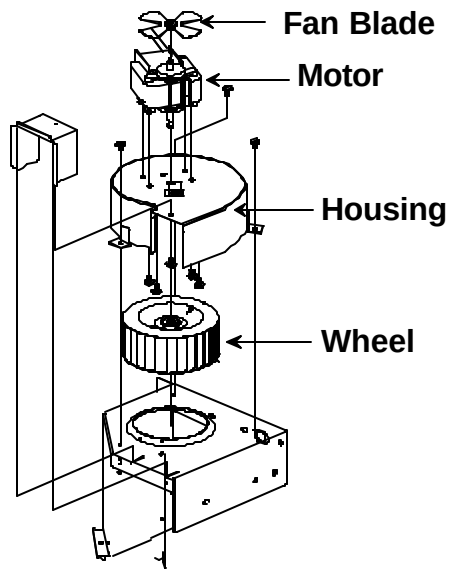

Blower Assembly

Disassembly

⚠ WARNING

To avoid the risk of electrical shock, personal injury or death; disconnect power to oven and discharge capacitors before following any disassembly procedure.

Fan Blade

1. Pull blade off shaft.
2. When reinstalling blade, push blade on shaft and rotate to insure clearance between fan blade and motor mounting bolt.

Transformer

1. See “Component Location” Figure 3, for location.
2. Remove outer case and back panel.
3. Remove screws securing transformer to chassis.
4. Pry upward and back to release transformer from chassis.
5. Remove wire connections from transformer.

NOTE: When placing transformer back into chassis. Front portion of transformer **must** slide into base pan tab.

6. Reassemble transformer in reverse order.

Capacitor

1. See “Component Location” Figure 2, for location.
2. Remove outer case and back panel.
3. Discharge capacitor and remove wires from terminals.
4. Remove capacitor bracket mounting screw.
5. Reassemble capacitor in reverse order.

NOTE: Capacitor case must be installed into indent in back panel.

Heater Box

1. See “Component Location” Figure 3, for location.
2. Remove outer case and back panel.
3. Remove wires connected to heating elements, convection fan, and control thermal cutout.
4. Remove screws securing heater box.
5. Slide heater box sideways from chassis.
6. Reassemble heater box in reverse order.

Heating Elements

1. See “Component Location” Figure 5, for location.
2. Remove outer case and back panel.
3. Remove heater box.
4. Remove screws securing heater assembly to heater box.
5. Reassemble heating element in reverse order.

NOTE: Center heating element around convection fan blade.

Convection Fan and Motor

1. See “Component Location” Figure 5, for location.
2. Remove outer case and back panel.
3. Remove heater box.
4. Remove left handed threaded nut on fan blade, and slide fan off.
5. Remove screws securing convection motor to heater box.
6. Reassemble convection motor in reverse order.

Fuse

1. See “Component Location” Figure 2, for location.
2. Remove outer case.
3. Replace fuse and reassemble in reverse order.

Disassembly

⚠ WARNING

To avoid the risk of electrical shock, personal injury or death; disconnect power to oven and discharge capacitors before following any disassembly procedure.

Power Cord

1. See “Component Location” Figure 3, for location.
2. Remove outer case and back panel.
3. Disconnect wiring.
4. Remove strain relief by compressing with pliers.
5. Remove power cord.
6. Reassemble power cord in reverse order.

Light Socket

1. Remove outer case.
2. Remove screws securing lamp cover bracket.
3. Unscrew light bulb from socket.
4. Disconnect wire terminals to light socket.
5. Remove screw securing light socket to light retainer.
6. Reassemble light socket in reverse order.

Line Filter

1. See “Component Location” Figure 2, for location.
2. Remove outer case.
3. Replace line filter and reassemble in reverse order.

Replacing Oven Light Bulb

⚠ WARNING

To avoid electrical shock which can cause severe personal injury or death, unplug power cord or open circuit breaker to oven before replacing light bulb. After replacing light bulb, restore power.

⚠ CAUTION

To avoid personal injury or property damage, observe the following:

- Allow oven and light bulb to cool.
- Wear gloves when replacing light bulb.

Tools Needed

- Protective gloves
- Phillips screwdriver
- 40-watt, 250-volt appliance bulb (available from authorized distributor or servicer)

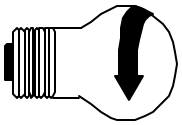

To remove bulb, turn in direction shown.

1. Remove screw from access cover on top left wall of oven exterior. Remove access cover.
2. Remove old bulb and replace with new bulb.
3. Replace access cover and screw by reversing procedure in step 1.

Disassembly

WARNING

To avoid the risk of electrical shock, personal injury or death; disconnect power to oven and discharge capacitors before following any disassembly procedure.

Component Location

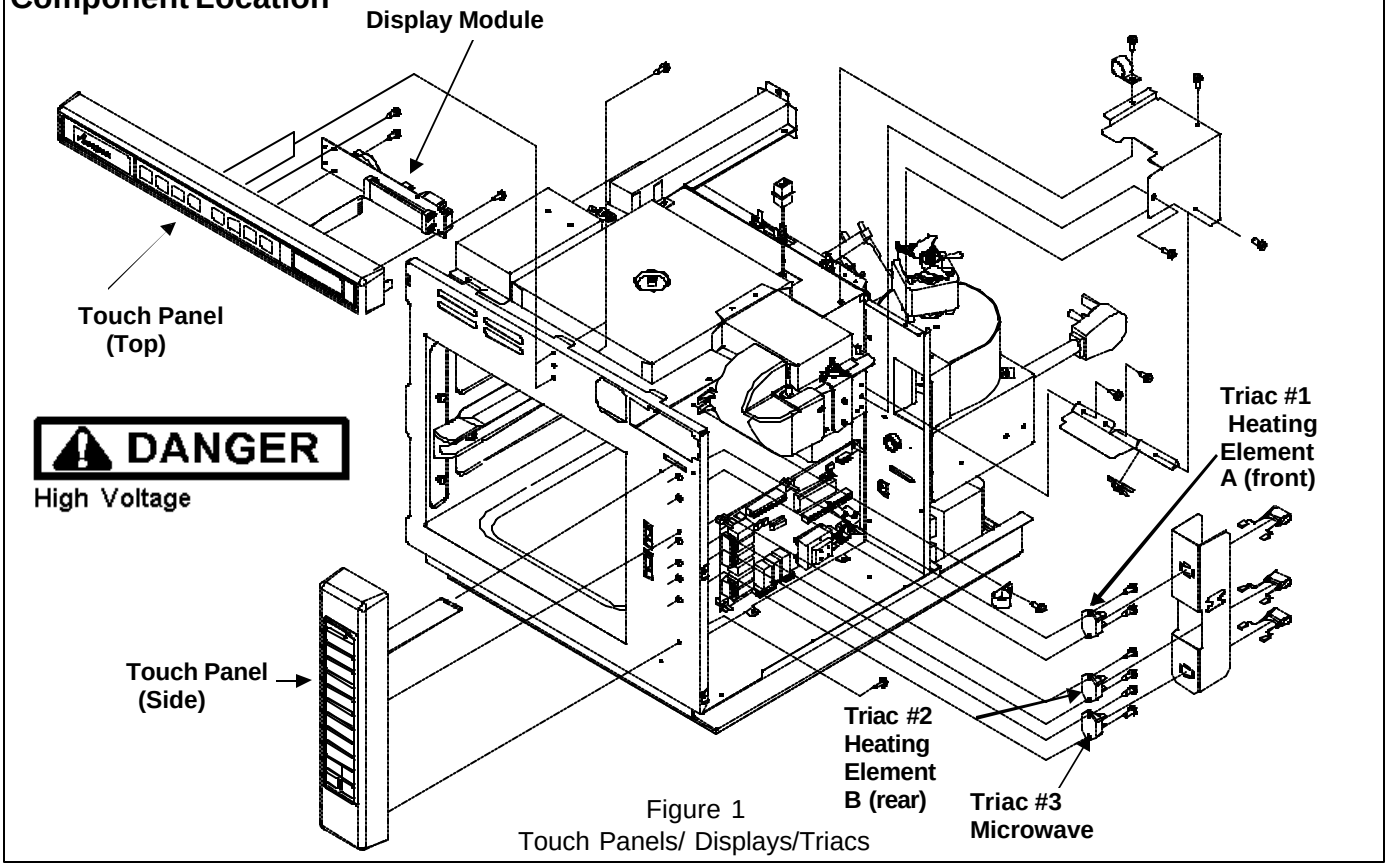

Figure 1
Touch Panels/ Displays/Triacs

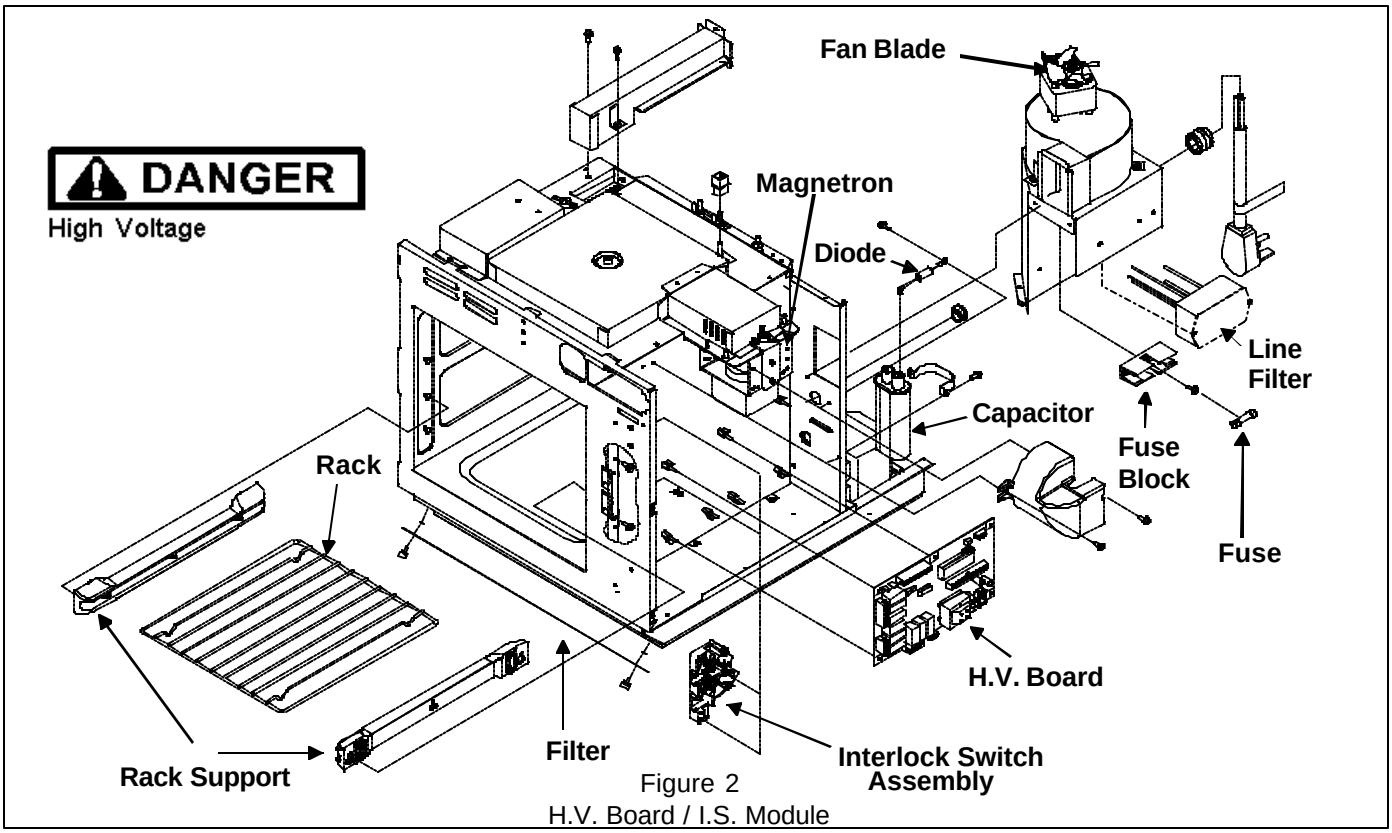

Figure 2
H.V. Board / I.S. Module

Disassembly

⚠ WARNING

To avoid the risk of electrical shock, personal injury or death; disconnect power to oven and discharge capacitors before following any disassembly procedure.

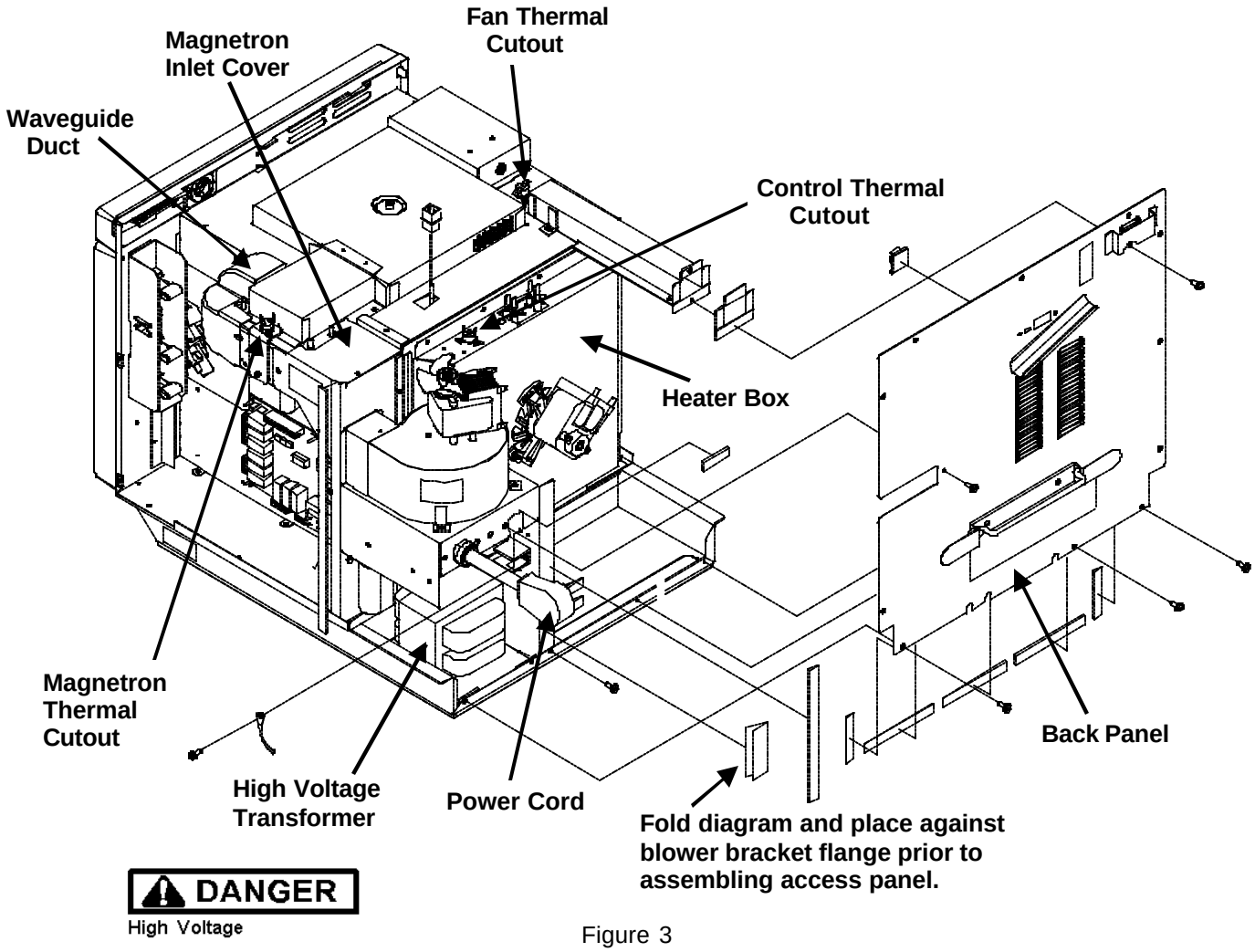

Figure 3
Back Panel

Disassembly

WARNING

To avoid the risk of electrical shock, personal injury or death; disconnect power to oven and discharge capacitors before following any disassembly procedure.

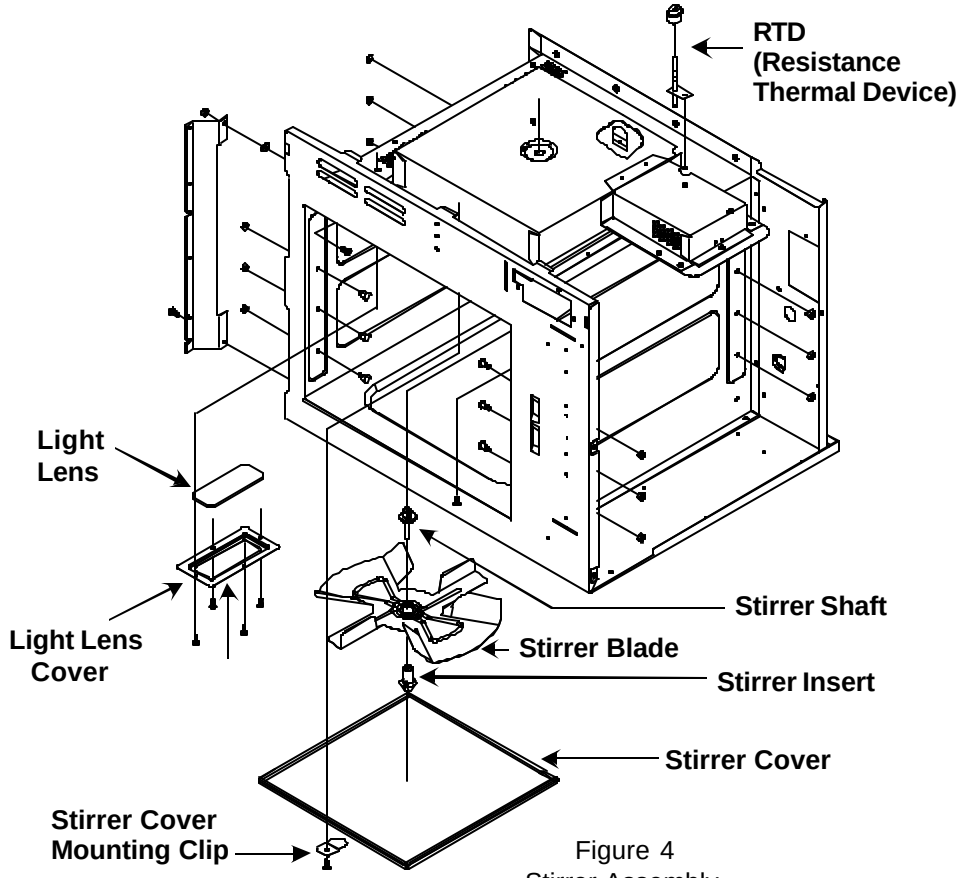

Figure 4
Stirrer Assembly

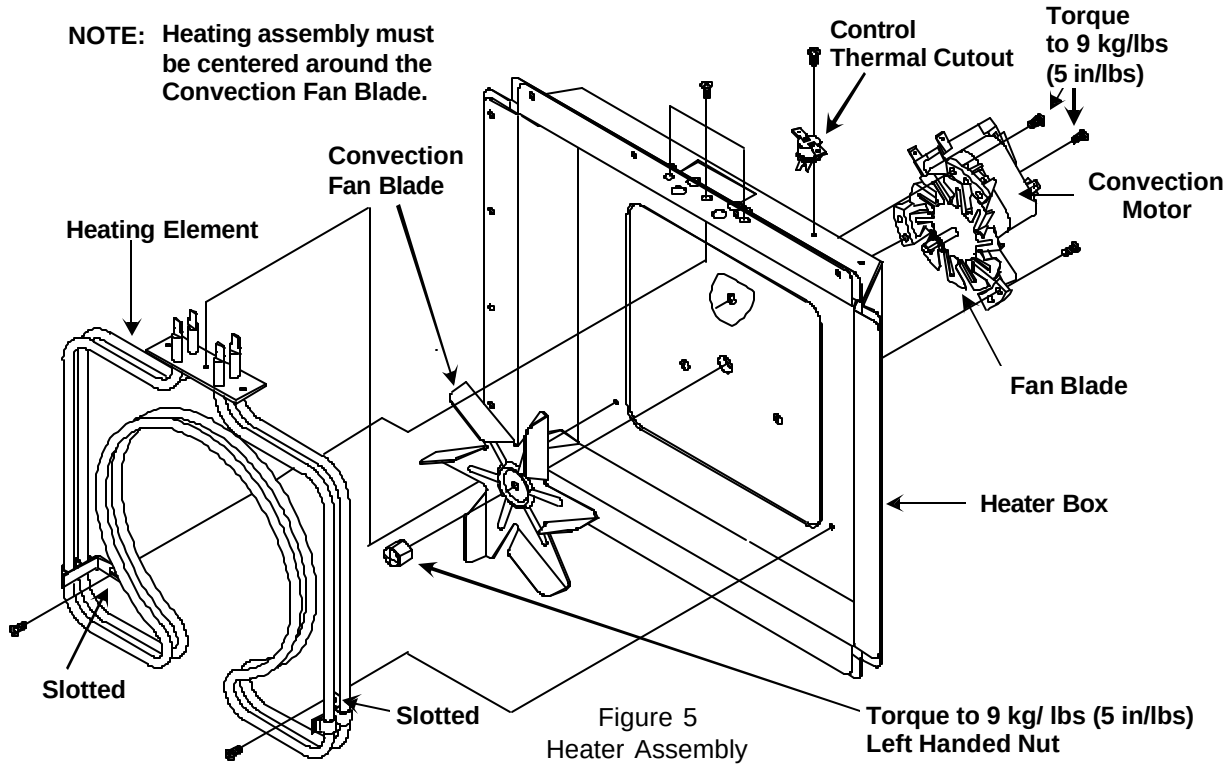

Figure 5
Heater Assembly

WARNING

To avoid the risk of electrical shock, personal injury or death; disconnect power to oven and discharge capacitors before following any disassembly procedure.

This page intentionally left blank.

Appendix A

Owner's Manual

International Commercial Combination Microwave and Convection Oven

Keep these instructions for future reference. If the equipment changes ownership, be sure this manual accompanies equipment.

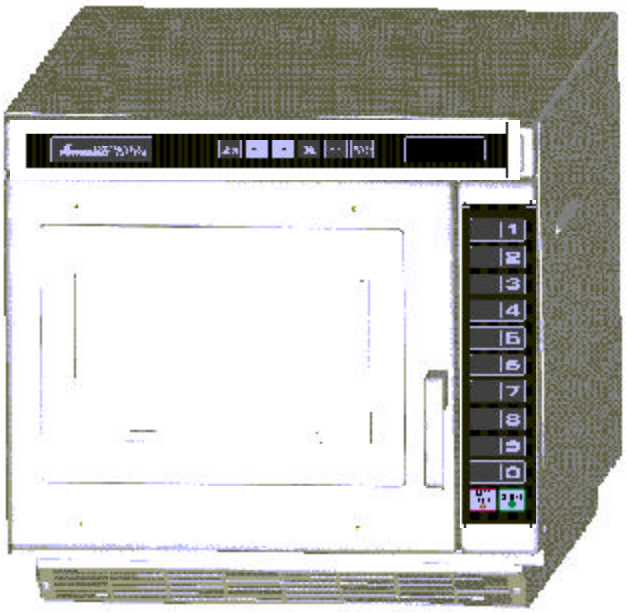

Model Identification

When contacting Amana, provide product information. Product information is located on oven serial plate. Record the following information:

Model Number: _____
Manufacturing Number: _____
Serial or S/N Number: _____
Date of purchase: _____
Dealer's name and address: _____
_____

Any questions or to locate an authorized servicer, call 1-319-622-5511 If an automated telephone system is reached, select Commercial Microwave Ovens category. Warranty service must be performed by an authorized servicer. Amana also recommends contacting an authorized servicer if service is required after warranty expires.

PRECAUTIONS TO AVOID POSSIBLE EXPOSURE TO EXCESSIVE MICROWAVE ENERGY

A. **DO NOT** attempt to operate this oven with door open since open door operation can result in harmful exposure to microwave energy. It is important not to defeat or tamper with safety interlocks.

B. **DO NOT** place any object between oven front face and door or allow soil or cleaner residue to accumulate on sealing surfaces.

C. **DO NOT** operate oven if it is damaged. It is particularly important that oven door close properly and that there is no damage to:

(1.) door (bent)
(2.) hinges and latches (broken or loosened)
(3.) door seals and sealing surfaces.

D. Oven should not be adjusted or repaired by anyone except properly qualified service personnel.

Contents

Model Identification 2
PRECAUTIONS TO AVOID POSSIBLE EXPOSURE TO EXCESSIVE MICROWAVE ENERGY 2
IMPORTANT SAFETY INSTRUCTIONS 3
Grounding Instructions 5
Installation 5
Display and Features 6
Programming 9
Convection Cooking 10
Combination Cooking (Microwave and Convection) 11
User Options 12
User Maintenance 13
Service Codes 13
Care and Cleaning 14
Troubleshooting 15
Model Specifications 16

IMPORTANT SAFETY INSTRUCTIONS

Recognize this symbol as a SAFETY message

Recognize this symbol as a HOT SURFACE WARNING

WARNING

When using electrical oven, basic safety precautions should be followed to reduce risk of burns, electric shock, fire, or injury to persons or exposure to excessive microwave energy.

1. **READ** all instructions before using equipment.
2. **READ AND FOLLOW** the specific ***PRECAUTIONS TO AVOID POSSIBLE EXPOSURE TO EXCESSIVE MICROWAVE ENERGY*** on page 2.
3. This equipment **MUST BE GROUNDED**. Connect only to properly grounded outlet. See ***GROUNDING INSTRUCTIONS*** on page 5.
4. Install or locate this equipment **ONLY** in accordance with the installation instructions in this manual.
5. Some products such as whole eggs and sealed containers—for example, closed glass jars—may explode and **SHOULD NOT** be **HEATED** in this oven.
6. Use this equipment **ONLY** for its intended use as described in this manual. Do not use corrosive chemicals or vapors in this equipment. This type of oven is specifically designed to heat or cook. It is not designed for industrial or laboratory use.
7. As with any equipment, **CLOSE SUPERVISION** is necessary when used by **CHILDREN**.
8. **DO NOT** operate this equipment if it has a damaged cord or plug, if it is not working properly, or if it has been damaged or dropped.
9. This equipment, including power cord, must be serviced **ONLY** by qualified service personnel. Special tools are required to service equipment. Contact nearest authorized service facility for examination, repair, or adjustment.
10. **DO NOT** cover or block any openings on the equipment.
11. **DO NOT** store this equipment outdoors. **DO NOT** use this product near water – for example, near a kitchen sink, in a wet basement, or near a swimming pool, and the like.
12. **DO NOT** immerse cord or plug in water.
13. Keep cord **AWAY** from **HEATED** surfaces.
14. **DO NOT** let cord hang over edge of table or counter.
15. See door cleaning instructions in *Care and Cleaning* section of manual on page 14.
16. For commercial use only.
17. **DO NOT** insert oversized foods or oversized utensils in a microwave/convection oven as they may create a fire, an electrical arc, or risk of electrical shock.
18. **DO NOT** clean with metal scouring pads. Pieces can break off the pad and touch electrical parts involving risk of electrical shock.
19. **DO NOT** use paper products not intended for cooking when equipment is operated in convection or combination mode.
20. **DO NOT** store any materials, other than manufacturer's recommended accessories, in this equipment when not in use.
21. **DO NOT** cover racks or any other part of the oven with metal foil. Airflow restriction will cause overheating of the oven.
22. **DO NOT** spray oven cleaning solutions toward the rear inner cavity surface. This will contaminate and damage the convection heating assembly.

SAVE THESE INSTRUCTIONS

IMPORTANT SAFETY INSTRUCTIONS

⚠ CAUTION

To avoid risk of personal injury or property damage, observe the following:

1. Briskly stir or pour liquids before heating with microwave energy to prevent spontaneous boiling or eruption. Do not overheat. If air is not mixed into a liquid, liquid can erupt in oven or after removal from oven.
2. **Do not** deep fat fry in oven. Fat could overheat and be hazardous to handle.
3. **Do not** cook or reheat eggs in shell or with an unbroken yolk using microwave energy. Pressure may build up and erupt. Pierce yolk with fork or knife before cooking.
4. Pierce skin of potatoes, tomatoes, and similar foods before cooking with microwave energy. When skin is pierced, steam escapes evenly.
5. **Do not leave oven unattended.**
6. **Do not** use regular cooking thermometers in oven when cooking in microwave or combination mode. Most cooking thermometers contain mercury and may cause an electrical arc, malfunction, or damage to oven.
7. **Do not** heat baby bottles in oven.
8. **Do not** use metal utensils in oven except when recommended by microwave food manufacturers or recipe requires metal utensils in convection or combination mode. Heat food in containers made of glass or china if possible.
9. Never use paper, plastic, or other combustible materials that are not intended for cooking. If oven temperature is high, material may ignite.
10. Oven temperature is at least 150°F in convection mode. Verify plastic, paper or other combustible materials are recommended by the manufacturer to withstand the minimum oven temperature.
11. When cooking with paper, plastic, or other combustible materials, follow manufacturer's recommendations on product use.
12. **Do not** use paper towels which contain nylon or other synthetic fibers. Heated synthetics could melt and cause paper to ignite.
13. **Do not** heat sealed containers or plastic bags in oven. Food or liquid could expand quickly and cause container or bag to break. Pierce or open container or bag before heating.
14. Racks, utensils, rack guides, and oven surfaces may become hot during or after use. Use utensils or protective clothing, like pan grips or dry oven mitts, when necessary to avoid burns.
15. **Do not** unplug oven immediately after use. Internal fan must cool oven to avoid damage of electrical components.
16. To avoid pacemaker malfunction, consult physician or pacemaker manufacture about effects of microwave energy on pacemaker.
17. **DO NOT** pop popcorn in this oven.

⚠ WARNING

To reduce risk of fire in the oven cavity:

a. DO NOT overcook food. Carefully attend oven if paper, plastic, or other combustible materials are placed inside the oven to facilitate cooking.

b. Remove wire twist-ties from paper or plastic bags before placing bag in oven.

c. KEEP oven DOOR CLOSED, turn oven off, and disconnect the power cord, or shut off power at the fuse or circuit breaker panel, if materials inside the oven should ignite. Fire may spread if door is opened.

d. DO NOT use the cavity for storage. DO NOT leave paper products, cooking utensils, or food in the cavity when not in use.

SAVE THESE INSTRUCTIONS

Unpacking Oven

- Inspect oven for damage such as dents in door or inside oven cavity.
- Report any dents or breakage to source of purchase immediately. **Do not attempt to use oven if damaged.**
- Remove all materials from oven interior.
- If oven has been stored in extremely cold area, wait a few hours before connecting power.

Radio Interference

Microwave operation may cause interference to radio, television, or a similar oven. Reduce or eliminate interference by doing the following:

- Clean door and sealing surfaces of oven according to instructions in *Care and Cleaning* section.
- Place radio, television, etc. as far as possible from oven.
- Use a properly installed antenna on radio, television, etc. to obtain stronger signal reception.

Oven Placement

- Do not install oven next to or above source of heat, such as pizza oven or deep fat fryer. This could cause microwave oven to operate improperly and could shorten life of electrical parts.
- Do not block or obstruct oven filter. Allow access for cleaning.
- Install oven on level countertop surface.
- Place warning label in a conspicuous place close to microwave oven.
- Outlet should be located so that plug is accessible when oven is in place.

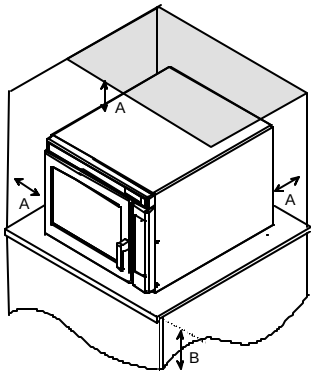

A—Allow at least 1 1/4" (3.18 cm) of clearance around top, back and sides of oven. Proper air flow around oven cools electrical components. With restricted air flow, oven may not operate properly and life of electrical parts is reduced.

B—Install combination oven so oven bottom is at least 3 feet (91.5 cm) above floor.

Oven Clearances

The switching operation of this microwave oven can cause voltage fluctuations on the supply line. The operation of this oven under unfavorable voltage supply conditions can have adverse effects. This device is intended for the connection to a power supply system wiht a maximum permissable system impedance Zmax of **1.1 Ohm** at the interface point of the user's supply. The user has to ensure that this device is connected only to a power supply system which fulfills the requirement above. If necessary, the user can ask the public power supply company for the system impedance at the interface point.

WARNING

To avoid risk of electrical shock or death, this oven must be grounded and plug must not be altered.

Earthing Instructions

Oven MUST be grounded.

Grounding reduces risk of electric shock by providing an escape wire for the electric current if an electrical short occurs. This oven is equipped with a cord having a grounding wire with a grounding plug. The plug must be plugged into an outlet that is properly installed and grounded.

Consult a qualified electrician or servicer if grounding instructions are not completely understood, or if doubt exists as to whether the oven is properly grounded.

Do not use an extension cord.
If the product power cord is too short, have a qualified electrician install a three-slot receptacle. This oven should be plugged into a separate 50 hertz circuit with the electrical rating as shown in specifications table. Models require a 230/240 voltage supply. When the combination oven is on a circuit with other equipment, an increase in cooking times may be required and fuses can be blown.

External Equipotential Earthing Terminal

Equipment has secondary earthing terminal. Terminal provides external earthing connection used in addition to earthing prong on plug. Located on outside of oven back, terminal is marked with symbol shown below.

Display and Features

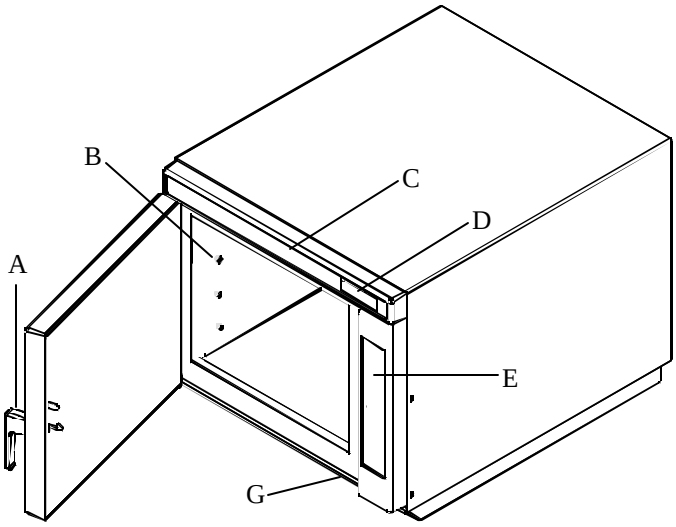

A—Oven Door Handle (Lift to open.)
B—Rack Guides
C—Top Control Panel
D—Display
E—Side Control Panel
G—Air Intake Filter

Oven Features

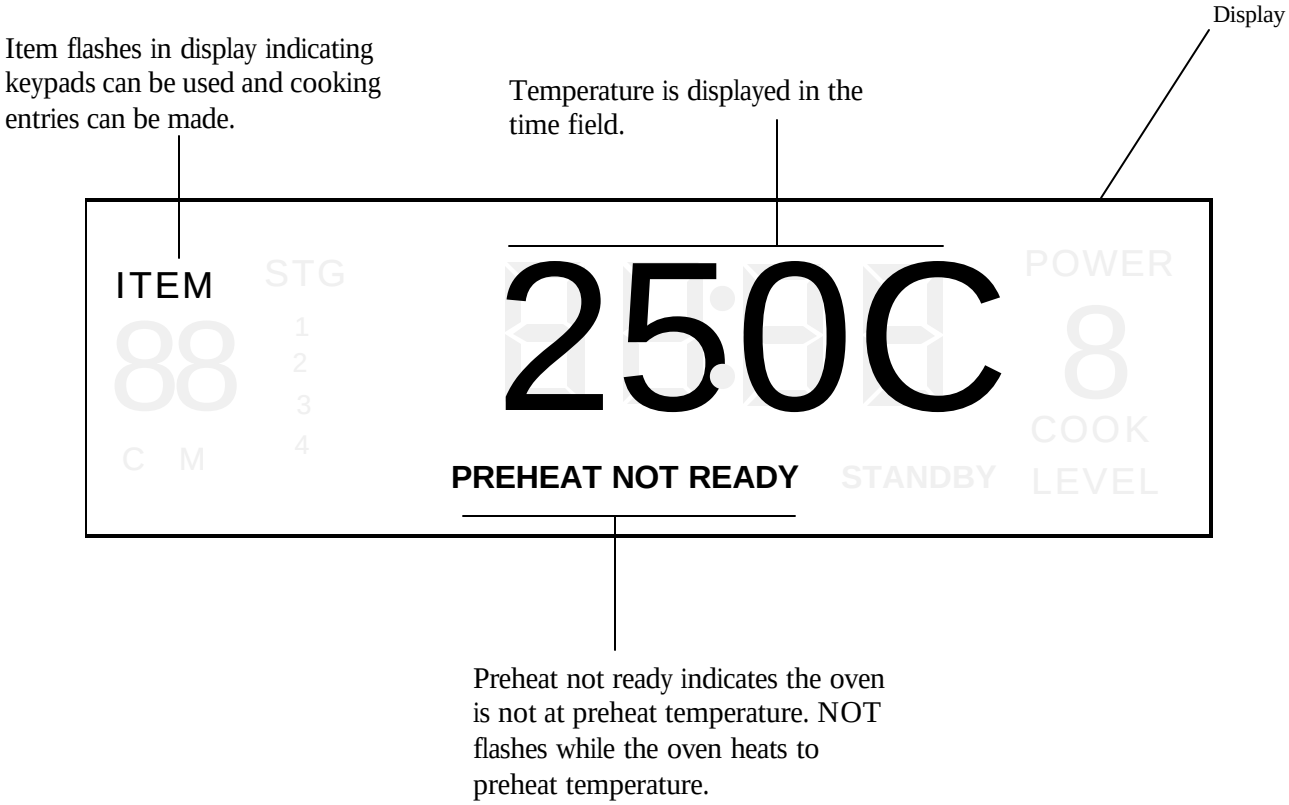

Display and Features (cont'd)

Item is not displayed indicating keypad will not accept entries. To activate keypad, open and close oven door—Item will then display.

Displays stage the oven is cooking in during multi-stage cooking cycles.

Preheat ready displays when oven has reached the preset preheat temperature.

Displays menu pad selected by user.

Convection cooking only.

Power displays when oven is actively generating microwave energy. Will not display when set at 0, and will turn on and off when set less than HI.

Time left in cooking condition

Indicates percentage of microwave power (0 to 100%).
9 is 90%,
5 is 50%,
H is High (100%).

Combination cooking: both convection (C) and microwave energy (M) are used.

Cook level displays with the amount of microwave energy used.

Display and Features (cont'd)

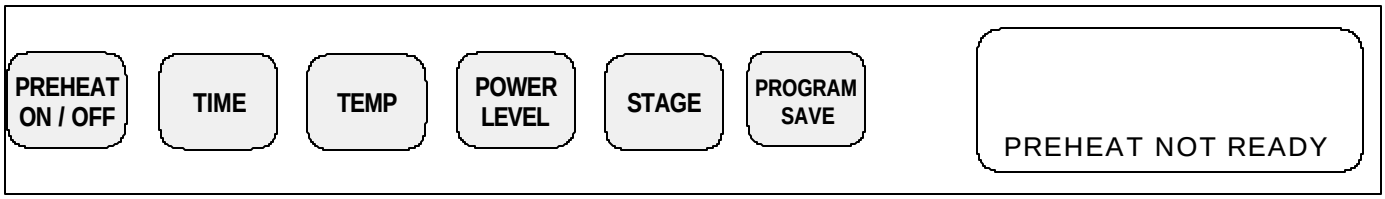

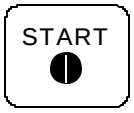

Start Pad

The start pad is used to begin a manual time entry cooking cycle.

STOP/RESET pad

The STOP/RESET pad stops a cooking sequence in progress, clears out any remaining time, and also ends a programming or user option cycle. When the STOP/RESET pad is used to end a programming or option change, the changes are discarded.

Temperature warnings

The combination oven has two distinct temperature warnings:

- A warning when the preheat temperature does not match the preprogrammed temperature of a cooking condition.
- A warning when the actual oven cavity temperature is not to preheat temperature, such as when the oven is first started.

Cooking Display

DISPLAYS	DESCRIPTION
PREHEAT READY	PREHEAT READY displays when oven has reached preheat temperature and is ready to cook.
00:00	Displays cooking time. If stage cooking is programmed, total cooking time is displayed.
PREHEAT NOT READY	PREHEAT NOT READY displays and NOT flashes when oven is turned on and is warming up to the selected preheat temperature.
COOK LEVEL	COOK LEVEL displays the current microwave power level. HI is the highest setting, and 0 is lowest (no microwave energy used).
ITEM	ITEM displays the single or double digit entry of a programmed cooking condition when using a programmed pad. ITEM also flashes when a cooking condition can be started or programmed.
STG	STG displays with a single number. This is the stage the oven is at in the cooking condition.
STANDBY	STANDBY displays when oven is turned off, and also after the oven is plugged in, the door is opened, and then shut.
C M	C M displays when oven is convection cooking.
C M	C M displays when oven is cooking using both microwave energy and convection.
POWER	POWER displays during active microwave generation in the oven. POWER will not display when power setting is at 0; and POWER will turn on and off when microwave energy is set at less than HI.

Programming Display

DISPLAYS	DESCRIPTION
Prog	Displays when oven is in programming mode for single pad or double pad memory.
OP: –	Displays when oven is in user option mode. User options can then be set or specified.
STG	Displays stage number during cooking or when programming a specific cooking stage. Stage number (1 through 4) indicates the stage that is being used.

Programming Pads

Oven is shipped from the factory for single pad programming. To change the oven default to double pad programming, see *User Option* section. To program the amount of time, power level, or temperature setting for a pad:

1. Oven must be ON.
   - Press PREHEAT ON/OFF.
   - ITEM must flash in display.
2. Press PROGRAM SAVE.
   - Programming mode begins.
   - PROG displays.
   - Oven is in programming mode.
3. Press pad to be programmed or reprogrammed.
   - Display will change to review all settings for the pad.
   - The pad number that is being programmed displays below the word ITEM.
4. Press TIME to program amount of cooking time.
   - Enter desired cooking time by using numeric key pads.
5. Press TEMP pad to program the cooking temperature.
   - Enter desired convection temperature by using numeric pads.
6. Press POWER LEVEL to program level of microwave power.
   - Press POWER LEVEL again to set to H (High).
   - For a lower microwave power, press pads 1 (for 10%) through 9 (for 90%). **0 turns off the microwave power and cooking is by convection only.**
7. Press PROGRAM SAVE to save the program changes.
8. To discard changes, press STOP/RESET.

PREHEAT ON / OFF

PROGRAM SAVE

TIME

TEMP

POWER LEVEL

PROGRAM SAVE

Programming Multiple Stages

Stage cooking allows consecutive cooking cycles without interruption.
Up to four different cooking cycles can be programmed into a memory pad.

To use stage cooking:

1. Follow steps 1 through 6 above.
7. Press STAGE.
   - This will begin programming for the next cooking stage.
   - Display indicates stage to be programmed.
   - Enter cook time, temp and power level as in steps 4. 5 and 6.
   - To enter another cooking stage for that pad, press STAGE pad again.
   - Up to four different stages can be programmed.
8. Press PROGRAM SAVE to save the program and changes.
9. To discard changes, press STOP/RESET before pressing PROGRAM SAVE.

STAGE

PROGRAM SAVE

Programming Preheat Setting

The convection temperature setting can be set between 65°C to 250°C (150°F to 475°F). It is recommended to set the preheat setting to the most commonly used temperature for that oven. The factory default preheat setting is 230°C (450°F).

To program the preheat setting:

1. Press PROGRAM SAVE pad.
2. Press TEMP pad.
3. Enter desired temperature by using the numeric key pads.
4. Preheat temperature is changed.

STAGE

What is stage cooking?

Stage cooking enables several different cooking cycles, or stages, to be used consecutively without repeated input from the user. Stage cooking can be set to to defrost food initially, then cook it, and then keep the food warm until serving time.

Example of Stage Cooking Conditions

	Stage 1	Stage 2	Stage 3
Temp	230°C	230°C	230°C
Power	H (high)	3	0
Time	2:30	1:30	1:30

Convection Cooking

⚠ CAUTION

To avoid risk of burns, handle utensils, racks, and door with care. Allow oven, utensils, and racks to cool before cleaning. Oven, utensils, and racks, become hot during operation.

Convection Cooking

Convection cooking utilizes both a convection element and fan to evenly distribute heated air throughout the oven cavity. By circulating air, no hot or cold spots occur, creating a consistent temperature envelope around the food. These consistent temperatures cook food evenly and reduces cooking time. Oven will always operate in convection mode.

? All the pad does is beep.

Ovens are not shipped preprogrammed. Any preset cooking conditions must be set by the customer. If a pad is pressed that has not been programmed, a rapid triple beep will sound and no cooking condition will initiate.

To operate the oven for convection cooking only, you can use preprogrammed pads or manual time entry. **The following instructions are for convection cooking only.** For combination cooking, see that section.

Convection Cooking with Programmed Pads

1. Press PREHEAT ON/OFF to start the oven.
   - Oven begins a preheat cycle.
   - PREHEAT NOT READY displays.
   - To change preheat settings, see *Programming.*
2. Oven reaches preheat temperature.
   - Signal sounds and PREHEAT READY displays.
3. Press selected pad.
   - ITEM must be flashing in display. If not, open and close door.
   - If using single pad programming, press pad and oven begins automatically.
   - For double pad programming, press pads in proper sequence and oven begins automatically.
4. Cooking cycle begins
   - Total cooking time is displayed.
   - To display the temperature while a program is running, press the TEMP button and the temperature will briefly display.
5. Oven finishes cooking sequence
   - An end of cycle beep signals the end of the cooking cycle.
   - **Oven interior and cooking dish will be hot.**
6. Press PREHEAT ON/OFF to shut off oven.

Convection Cooking Using Manual Time Entry

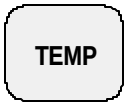

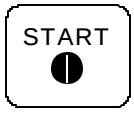

1. Press PREHEAT ON/OFF to start the oven.
   - Oven begins a preheat cycle.
   - PREHEAT NOT READY displays.
   - To change preheat settings, see *Programming*.
2. Oven reaches preheat temperature.
   - Signal sounds and PREHEAT READY displays.
3. Press TIME.
   - Enter desired cooking time by using the keypad.
4. Press TEMP if cooking temperature is different than preheat temperature.
   - Enter the new temperature.
5. Press POWER LEVEL.
   - **For convection cooking only, press 0.**
6. To activate stage cooking, press STAGE and repeat steps 3, 4, and 5.
   - Up to 4 different stages can be programmed.
7. Press the START pad to begin the cooking cycle.

Combination Cooking (microwave and convection)

⚠ CAUTION

To avoid risk of burns, handle utensils, racks, and door with care. Allow oven, utensils, and racks to cool before cleaning. Oven, utensils, and racks, become hot during operation.

To operate the oven for combination cooking, you can use preprogrammed pads or manual time entry. **The following instructions are for combination cooking only.** For convection only cooking, see that section.

Combination Cooking With Preprogrammed Pads

PREHEAT ON / OFF

1. Press PREHEAT ON/OFF to start the oven.
   - Oven begins a preheat condition.
   - PREHEAT NOT READY displays with NOT flashing.
   - To change preheat temperature, see *Programming* section.
2. Oven reaches preheat temperature.
   - Signal sounds and PREHEAT READY displays.
3. Press desired pad.
   - For double pad programming, press pads in proper sequence.
   - Oven begins automatically.
4. Cooking cycle begins
   - Total cooking time is displayed.
   - To display the temperature while a program is running, press the TEMP button and the temperature will briefly display.
5. Oven finishes cooking sequence
   - An end of cycle beep signals the end of the cooking cycle. **Oven interior and cooking dish will be hot.**
6. Press PREHEAT ON/OFF to shut off oven.

Using manual time entry

PREHEAT ON / OFF

1. Press PREHEAT ON/OFF to start the oven.
   - Oven begins a preheat condition.
   - PREHEAT NOT READY displays with NOT flashing.
   - To change the preheat temperature, see *Programming*.
2. Oven reaches preheat temperature.
   - Signal sounds and PREHEAT READY displays.
3. Press TIME.
   - Enter desired cooking time by using numeric keypad.
4. Press TEMP if cooking temperature differs from preheat temperature.
   - Enter the new temperature.
5. Press POWER LEVEL.
   - To have microwave power on HIGH, press the POWER LEVEL pad again. H displays.
   - For a lower microwave power, press pads 1 (for 10%) through 9 (for 90%). 0 turns off the microwave power and cooking is by convection only.
6. If stage cooking is desired, press STAGE and repeat steps 3, 4, and 5.
   - Up to 4 different stages can be programmed.
7. Press the START pad to begin the cooking cycle.

TIME

TEMP

POWER LEVEL

START

Combination Cooking

The combination mode uses both the speed of **microwave energy** and browning of **convection** cooking to yield fast, high quality food.

- Microwave cooking uses high frequency energy waves to heat the food. When cooking, microwave energy causes food molecules to move rapidly. This rapid movement between the food molecules creates heat, which cooks the food. POWER displays when oven is generating microwave energy for the current cycle.
- Convection cooking uses the selected oven temperature to bake and brown foods. The circulating air surrounds food in an envelope of evenly heated air.
- Oven will maintain a minimum convection temperature of 65°C (150°F) to ensure drier air and more even cooking.

User Options

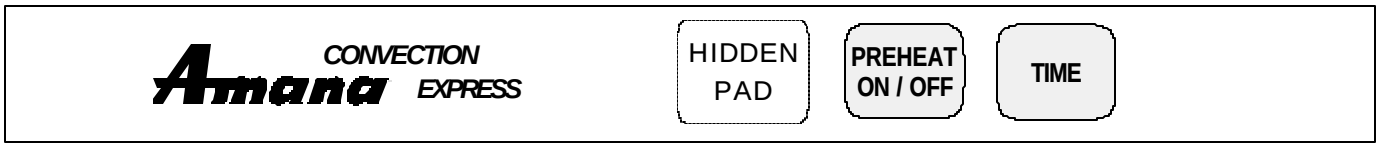

Didn't like an option?

Factory settings are marked in bold. To change the oven back to the factory setting, simply select the option that is marked in bold.

My changes weren't saved.

In order for any changes to be saved, the PROGRAM SAVE pad must be pressed after selecting an option. Pressing the STOP/RESET pad will not save changes.

Changing user options

Options such as single or double pad programming, beep volume, and maximum cooking time can be changed to suit individual preferences.

To change options oven STANDBY must display:

1. Press hidden pad.
   - Pad is unmarked and located to the direct left of PREHEAT ON/OFF pad.
   - Nothing will be displayed when hidden pad is pressed.
2. Press PROGRAM SAVE pad.
   - OP: displays. Oven is now in options mode.
3. Press number pad that controls option to be changed.
   - See table below for options.
   - Current option will display.
4. Press number pad again to change the option.
   - Each time pad is pressed, option will change.
   - Match code displayed with code for desired option.
5. Press PROGRAM SAVE pad to save changes.
   - To change additional options, repeat steps 3 and 4.
   - Changes take affect after PROGRAM SAVE pad is pressed.
   - Press STOP/RESET to return to STANDBY, or open and close oven door.

Numbered Pads	Display	Options (Factory Settings in Bold)
1	**OP:10**	**Allows 10 (0-9) preprogrammed pads.**
Preprogrammed Pads	OP:11	Allows 100 (00-99) preprogrammed pads.
2	OP:20	Manual time entry/cooking not allowed
Manual Time Entry	**OP:21**	**Manual time entry/cooking allowed**
3	**OP:30**	**Opening oven door does not reset oven back to ready mode**
Reset to READY mode	OP:31	Opening oven door resets the oven back to ready mode
4	OP:40	Keys do not beep when pressed (keybeep off)
Keybeep	**OP:41**	**Keys beep when pressed (keybeep on)**
	OP:50	Keybeep volume OFF
5	OP:51	Keybeep volume low
Keybeep Volume	OP:52	Keybeep volume medium
	OP:53	**Keybeep volume high**
	OP:60	**Food done signal is a continuous beep until reset by user**
6	OP:61	Food done signal is a three second beep
Food Done Signal	OP:62	Food done signal is four beeps, continuously.
	OP:63	Food done signal is four beeps, four times
	OP:70	Keypad time entry window is 15 seconds
7	OP:71	Keypad time entry window is 30 seconds
Keypad Time Entry	**OP:72**	**Keypad time entry window is one minute**
	OP:73	Keypad time entry window is two minutes
	OP:80	**Both temperature warnings off**
8	OP:81	Warning only when preheat temperature does not match preprogrammed temperature
Temperature Warnings	OP:82	Warning only when actual oven cavity temperature is not to preheat temperature
	OP:83	Both temperature warnings on
TEMP PAD	OP:bo	°F
Temperature Scale	**OP:b1**	**°C**

Replacing Oven Light

1. Disconnect electrical supply.
2. Remove screw from access cover on top left wall of oven exterior.
3. While wearing protective gloves, unscrew the light bulb counterclockwise.
4. Replace light bulb with 230-volt (rated 250V), 40-watt appliance bulb.
   - **Do not over tighten bulb or it may be difficult to remove later.**
5. Replace light bulb cover and access cover before use.
6. Reconnect power supply.

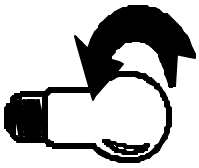

WARNING

To avoid risk of burns or electrical shock:
- disconnect electrical supply to oven before changing light bulb.
- before replacing light bulb make sure oven and bulb are cool.
- do not operate oven without bulb and access cover in place.

CAUTION

Wear gloves to protect hands from accidental bulb breakage.

Moving Oven Rack Guides **(some models)**

The oven rack guides can be moved to one of three positions within the oven, allowing for versatility in cooking and placement of food. The middle rack position is the most common. Guides can also be removed for easier cleaning.

To remove rack guides:
1. Oven cavity must be cool to touch.
2. Remove oven rack by lifting up and sliding to the front of the oven.
3. Apply gentle pressure by pulling upwards on the front of rack guide.
4. Lift the rear of the rack guide to remove. Guide may be snug.

To replace rack guides:
1. Oven cavity must be cool to touch.
   - UP on guide rack should be in correct direction for placement.
2. Place rear of rack guide over desired anchor in back of oven and push down.
3. Place front of rack guide over desired anchor in front of oven.
   - Apply firm pressure to front and rear of rack guide to fit onto anchor.
   - Fit may be tight.
   - Rack guide should not move after being set in place.
4. Replace oven rack as desired.
   - Slide oven rack towards rear of oven, holding upwards to avoid detents.
   - Oven rack can be placed upwards or downwards. Upwards is recommended.
   - **Oven rack must be seated in detents.**

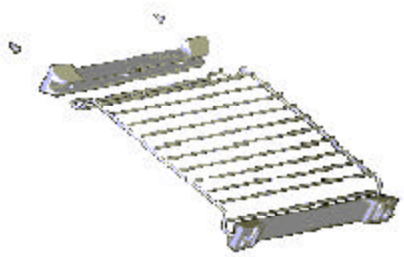

Oven Racks and Rack Hooks **(some models)**

Clean oven racks and rack hooks with detergent diluted in warm water or in dishwasher. Scrub with soft nylon pad to remove baked on material.
Do not soak rack hooks for an extended period of time.

NOTE: if the oven rack hook breaks do NOT use rack position. Replace broken oven rack hook immediately.

Service codes

During operation, the oven may display one of the following codes. **If this should occur:**

1. Unplug oven and leave unplugged for approximately one minute. Plug oven in and see if code reappears.
   - If code does not reappear, continue normal use with the oven.
2. If service code reappears, write down the service code displayed and contact the nearest authorized Amana Servicer.
   - Do not use oven until contacting the Amana Servicer.

Error Codes
Err1
Err2
Err3
Err4
Err5
Err6
Err7

Care and Cleaning

Clean oven frequently to maximize oven life, performance, and efficiency. A dirty oven cooks inefficiently because moisture, spills, and grease absorb convection and microwave energy.

⚠ WARNING

To avoid electrical shock which can cause severe personal injury or death, unplug power cord or open circuit breaker to oven before cleaning oven.

⚠ CAUTION

To prevent burns, handle utensils, racks, and door with care. Allow oven, utensils, racks to cool before cleaning. Oven, utensils, and racks, become hot during operation.

Oven Racks and Guides

Clean the oven racks and rack guides with a detergent solution made with warm water. Scrub with a soft nylon pad to loosen and remove any baked on materials. **DO NOT use a lye based oven cleaner, such as many of the 'instant' oven cleaners.** This will damage the finish of the oven, the racks, and rack guides.

Air Filter

Air filter must be cleaned regularly to prevent overheating of oven. The air filter is located directly below the oven door.

1. Remove the filter retaining screws, located on the outside edges of the filter.
2. Remove the air filter.
3. Wash filter in a mild detergent solution made with warm water.
4. Rinse and dry thoroughly.
5. Replace filter and screws.

Discharge Air Vents

Check for a build up of cooking vapors along discharge louvers in the back of the oven. Clean the air vent using a damp cloth to ensure proper airflow. Dry thoroughly.

Recommended Maintenance Schedule

Schedule Maintenance Cleaning (Not covered under warranty)

- Contact an authorized servicer to remove and clean heater box.
- Schedule appointment every 12 months or when heavy grease buildup is apparent on back of oven cavity.

Recommended Cleaning Schedule

- **Schedule daily cleaning and clean after use.**
- Clean interior, exterior, door and racks according to instructions.
- Clean spills immediately.
- Remove oven racks, and clean according to instructions.
- Wipe dry after cleaning.
- Clean air filter and air vents regularly to prevent overheating.

Cleaning Oven Exterior

Clean the door and other exterior surfaces with a clean cloth, sponge or nylon pad using a mild detergent and warm water solution. Wring cloth well to remove excess water before wiping oven.

- If spraying solutions into oven cavity, protect interior rear wall from moisture or mist.
- Do not use harsh or abrasive cleaners or cleaners containing ammonia.
- Do not use water pressure type cleaning systems.

Cleaning Oven Cavity

Remove racks and rack guides for best results. Recommended cleaning solution is **Convection Express Cleaner**. Repeat cleaning several times if necessary. Saturate oven interior surfaces with Amana Convection Express Cleaner and let sit for 2 to 5 minutes. Rub vigorously with nylon scouring pad to loosen debris. Wipe clean with warm, damp clean cloth.

NOTE: A plastic putty knife or equivalent may be used to remove baked on debris.

- Wear protective rubber gloves when cleaning oven.
- Use only a plastic putty knife, nylon scouring pad or equivalent, to aid in removing soil or build-up from the oven interior.
- **Do not use** knife, **metal** utensil, or **steel wool pad** to remove baked on material. This will damage the teflon coating.
- Refer to warranty for limitations regarding teflon interior and cleaning requirements.

Troubleshooting

⚠ WARNING

To avoid risk of electrical shock which can cause severe personal injury or death, do not remove outer case at any time. Only authorized servicer should remove outer case.

Problem	Possible Cause
Oven does not operate.	Confirm oven is plugged into dedicated circuit. Confirm oven is on grounded circuit. (Contact electrician to confirm) Check fuse or circuit breaker.
Oven operates intermittently.	Check air filter and discharge areas for obstructions.
If oven does not accept entries when pad is pressed.	Make sure oven is on and preheated. Open and close oven door. Press pad again.
If oven malfunctions or shows "ERR":	Oven control is equipped with a self-diagnostic system. Self-diagnostic system alerts you if there is a error or problem. When electronic control signals a problem, follow steps listed below. 1. Record number shown. 2. Unplug oven, wait for 1 minute, and plug in oven. • Disconnecting electrical supply may eliminate service code. If failure continues, contact an authorized servicer.
Oven fan turns on while oven is not preheating or cooking.	Normal operation.
"PREHEAT NOT READY" displays when cook pad is pressed.	Oven is operating normally. Display flashes "PREHEAT NOT READY" if the preheat temperature is different than programmed cooking cycle temperature.

Specifications

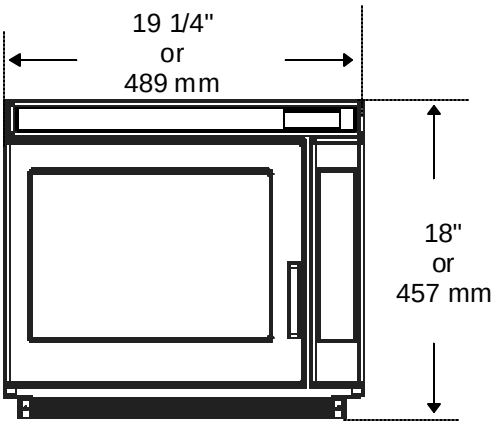

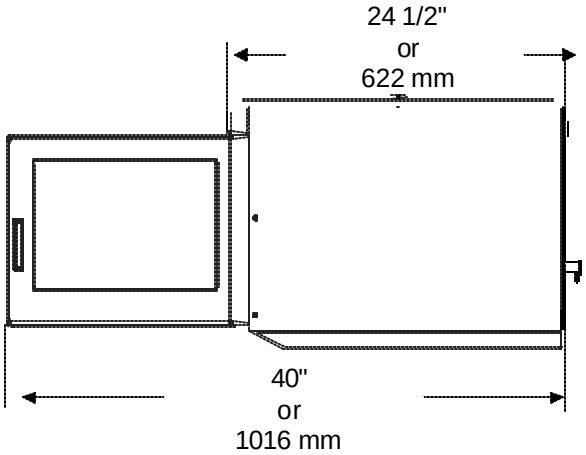

MODEL	ACE530, DS30E	UCA2000NT, UACE530, UDS30E
Power Source		
Voltage AC	230 V	230 V
Frequency	50 Hz	50 Hz
Amperage	16 A	13 A
Power		
Frequency	2450 MHz	2450 MHz
Nominal Microwave Energy (IEC705)	1000 Watts	1000 Watts
Power Consumption	Combination: 3400 watts Convection only: 2700 watts	Combination: 3000 watts Convection only: 2200 watts
Power Cord Length	5' 6" (168 cm)	5' 6" (168 cm)
Oven Cavity Dimensions inches (cm)	13" (33 cm) x 10½" (27 cm) x 15" (38 cm)	13" (33 cm) x 10½" (27 cm) x 15" (38 cm)
Net Weight	112lbs. (51 kg)	112lbs. (51 kg)
Oven Cavity Capacity	1.2 Cu. Ft. (34 L)	1.2 Cu. Ft. (34 L)
Receptacle and plug	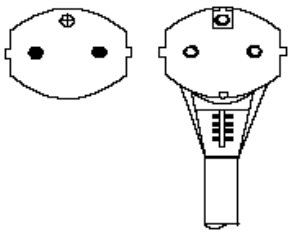	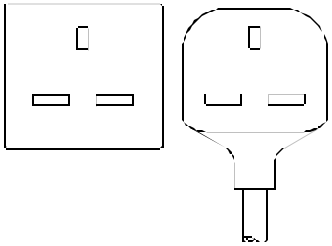

Product specifications can change at any time without notice.

© 2001 Amana Appliances
Amana, Iowa 52204