CATALOG OF REPLACEMENT PARTS

FMS20 MIXER

WITH ATTACHMENT HUB

ML-134387
ML-134388

WITHOUT ATTACHMENT HUB

ML-134398
ML-134399

FORM 43166 (September 2016)

 © 2016

Table of Contents

5 CONTROL PANEL
7 ELECTRICAL COMPONENTS
9 ATTACHMENT HUB (ML-134387 & ML-134388)
11 BASE AND PEDESTAL
13 BOWL SUPPORT
15 TRANSMISSION CASE AND MOTOR
17 TRANSMISSION
19 BOWL GUARD AND HEIGHT SENSOR
21 AGITATORS AND ACCESSORIES
23 WIRING HARNESSES

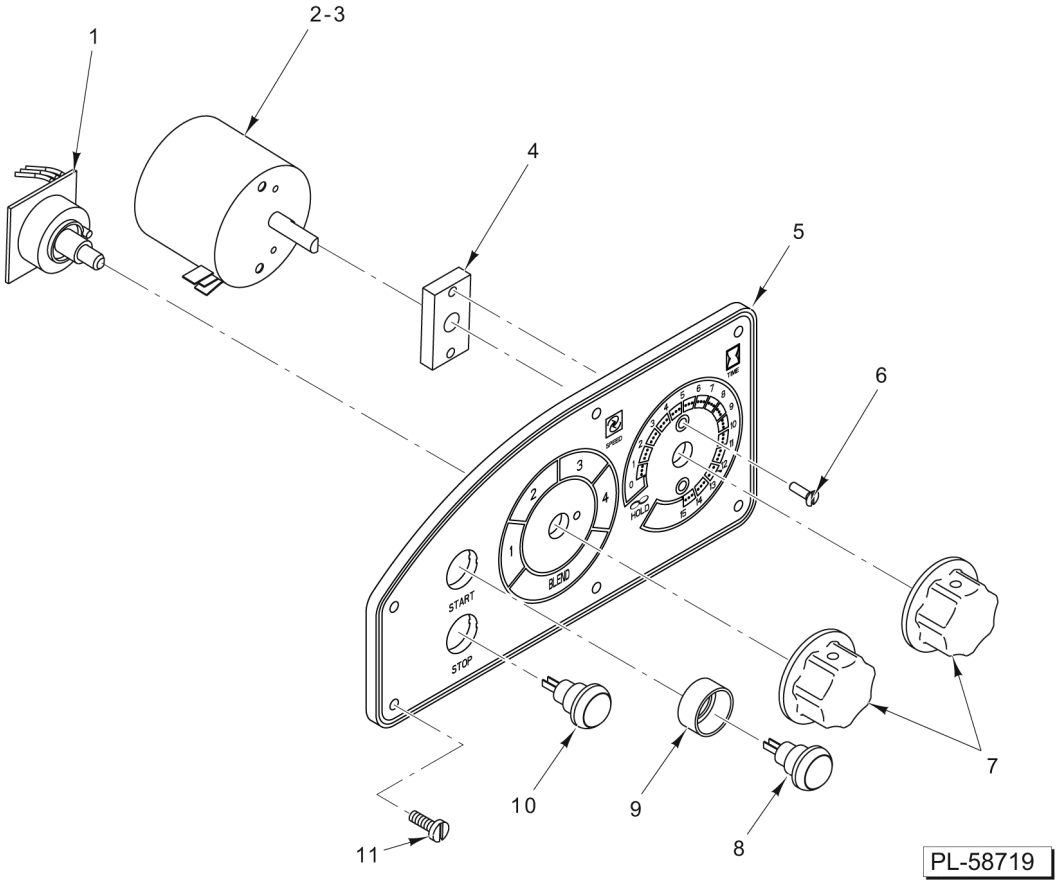

CONTROL PANEL

CONTROL PANEL

ILLUS. PL-58719	PART NO.	NAME OF PART	AMT.
1	00-917029	PCB Assy. - Speed Select	1
2	00-916988-00002	Timer Assy. (180-250 V., 60 Hz.) (ML-134388 & ML-134399)	1
3	00-916988-00001	Timer Assy. (90-130 V., 60 Hz.) (ML-134387 & ML-134398)	1
4	00-916938	Spacer - Timer	1
5	00-917442	Panel - Operator (Red)	1
6	SC-022-72	NLA - Obsolete--Mach. Screw 5-40 x 7/16 Slotted Flat Hd	2
7	00-917141	Knob - Control	2
8	00-917447	Switch - Start	1
9	00-917446	Guard - Switch	1
10	00-917448	Switch Assy. - Stop	1
11	SC-019-34	Mach. Screw 8-32 x 1/2 Slotted Bndg. Hd	6

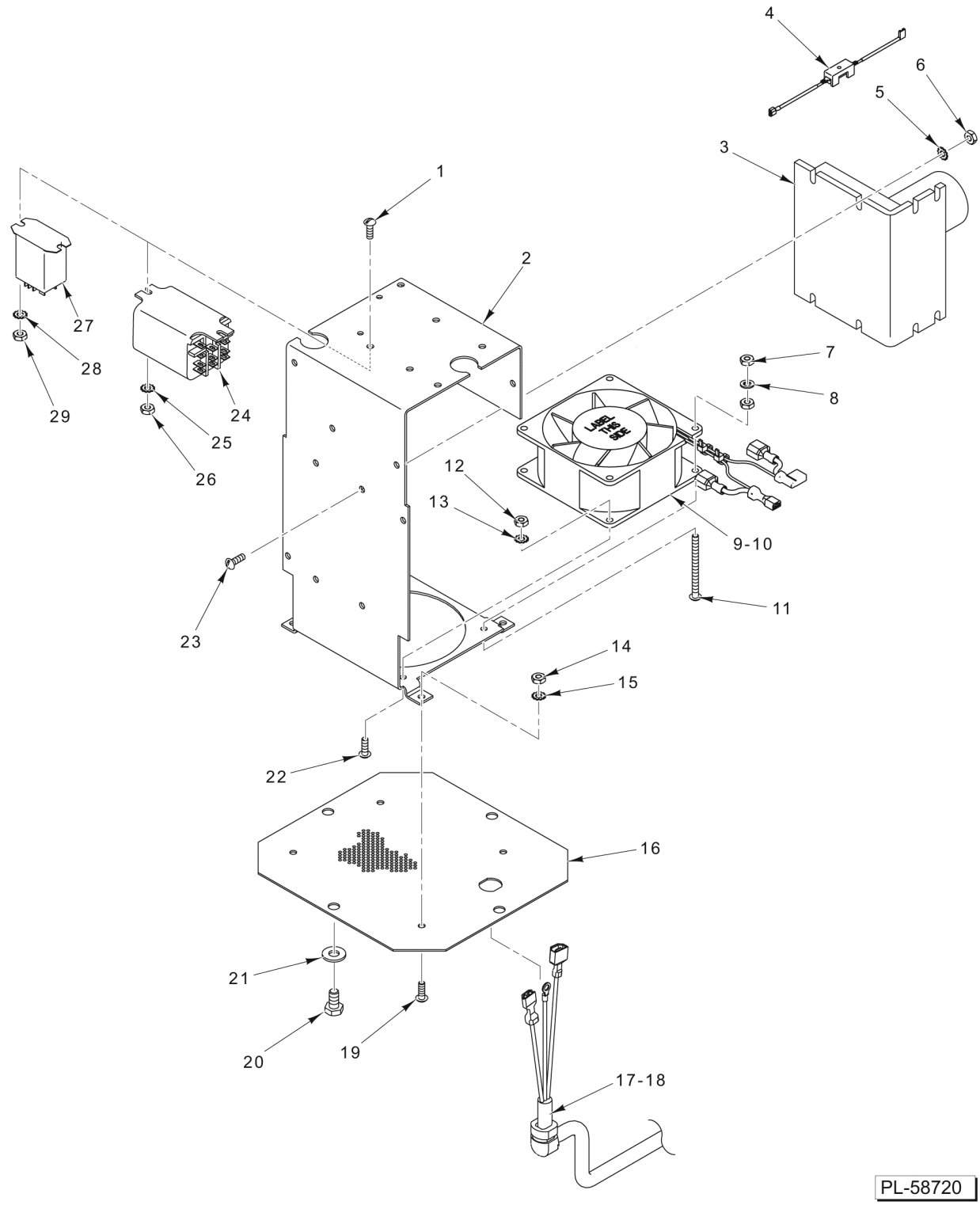

ELECTRICAL COMPONENTS

ELECTRICAL COMPONENTS

ILLUS. PL-58720	PART NO.	NAME OF PART	AMT.
1	SC-021-15	Mach. Screw 8-32 x 1/2 Slotted Rd. Hd. (SST)	2
2	00-917256	Plate - Mounting	1
3	00-917027-00001	Control - Speed (90 V.)	1
4	00-917668	Fuse Assy. (8 Amp.)	1
5	WL-007-07	Lockwasher #8 External Shakeproof	4
6	NS-009-12	Nut 8-32 Hex	4
7	NS-009-12	Nut 8-32 Hex	2
8	WL-013-08	Lockwasher #8 Internal Shakeproof	1
9	00-917447-00001	Fan Assy. (115 V.) (ML-134387 & ML-134398)	1
10	00-917447-00002	Fan Assy. (230 V.) (ML-134388 & ML-134399)	1
11	SC-116-66	Mach. Screw 8-32 x 2 Slotted Rd. Hd	1
12	NS-009-12	Nut 8-32 Hex	3
13	WL-007-07	Lockwasher #8 External Shakeproof	3
14	NS-009-12	Nut 8-32 Hex	4
15	WL-007-07	Lockwasher #8 External Shakeproof	4
16	00-917111	Plate - Bottom Cover	1
17	00-917525	NLA - Obsolete--Cord & Plug Assy. (120 V.) (Incls. Strain Relief) (ML-134387 & ML-134398)	1
18	00-917526	Cord & Plug Assy. (250 V.) (Incls. Strain Relief) (ML-134388 & ML-134399)	1
19	SC-021-15	Mach. Screw 8-32 x 1/2 Slotted Rd. Hd. (SST)	4
20	SC-036-14	Cap Screw 1/4-20 x 1/2 Hex Hd	4
21	WS-017-25	Washer	4
22	SC-021-15	Mach. Screw 8-32 x 1/2 Slotted Rd. Hd. (SST)	3
23	SC-021-15	Mach. Screw 8-32 x 1/2 Slotted Rd. Hd. (SST)	4
24	00-087714-020-3	Relay (3.P.D.T.) (ML-134388 & ML-134399)	1
25	WL-007-07	Lockwasher #8 External Shakeproof	2
26	NS-009-12	Nut 8-32 Hex	2
27	00-087714-00063	Relay (D.P.D.T.) (90 V.) (ML-134387 & ML-134398)	1
28	WL-007-07	Lockwasher #8 External Shakeproof	2
29	NS-009-12	Nut 8-32 Hex	2
	00-916972-002-2	Tubing - Convoluted Slit	1

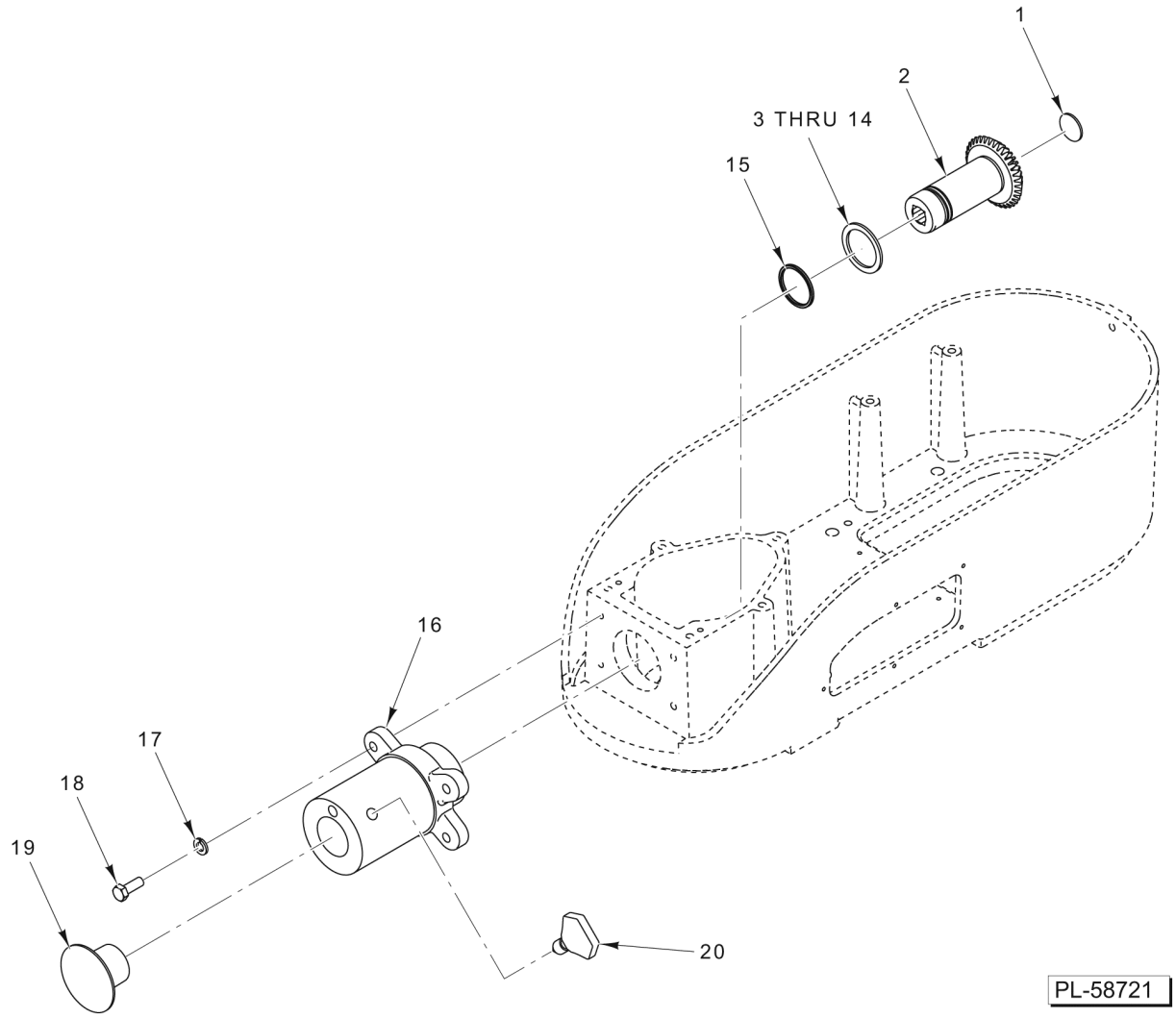

ATTACHMENT HUB
(ML-134387 & ML-134388)

ATTACHMENT HUB
(ML-134387 & ML-134388)

ILLUS. PL-58721	PART NO.	NAME OF PART	AMT.
1	PL-003-17	Plug - Expansion	1
2	00-917174	Gear - Drive Attachment (Incls. Item 1)	1
3	00-061920-00001	Washer - Thrust (0.076 Thk.)	AR
4	00-061920-00002	Washer - Thrust (0.079 Thk.)	AR
5	00-061920-00003	Washer - Thrust (0.082 Thk.)	AR
6	00-061920-00004	Washer - Thrust (0.085 Thk.)	AR
7	00-061920-00005	Washer - Thrust (0.088 Thk.)	AR
8	00-061920-00006	Washer - Thrust (0.091 Thk.)	AR
9	00-061920-00007	Washer - Thrust (0.094 Thk.)	AR
10	00-061920-00008	Washer - Thrust (0.097 Thk.)	AR
11	00-061920-00009	Washer - Thrust (0.100 Thk.)	AR
12	00-061920-00010	Washer - Thrust (0.103 Thk.)	AR
13	00-061920-00011	Washer - Thrust (0.106 Thk.)	AR
14	00-061920-00012	Washer - Thrust (0.070 Thk.)	AR
15	OR-001-03	O-Ring - Quad	1
16	00-917066-00002	Hub - Attachment	1
17	WL-003-47	Lockwasher 5/16 Helical	4
18	SC-037-85	Cap Screw 5/16-18 x 1 Hex Hd	4
19	00-917322	Plug - Attachment (Black)	1
20	00-108197-00001	Thumb Screw 1-1/4	1

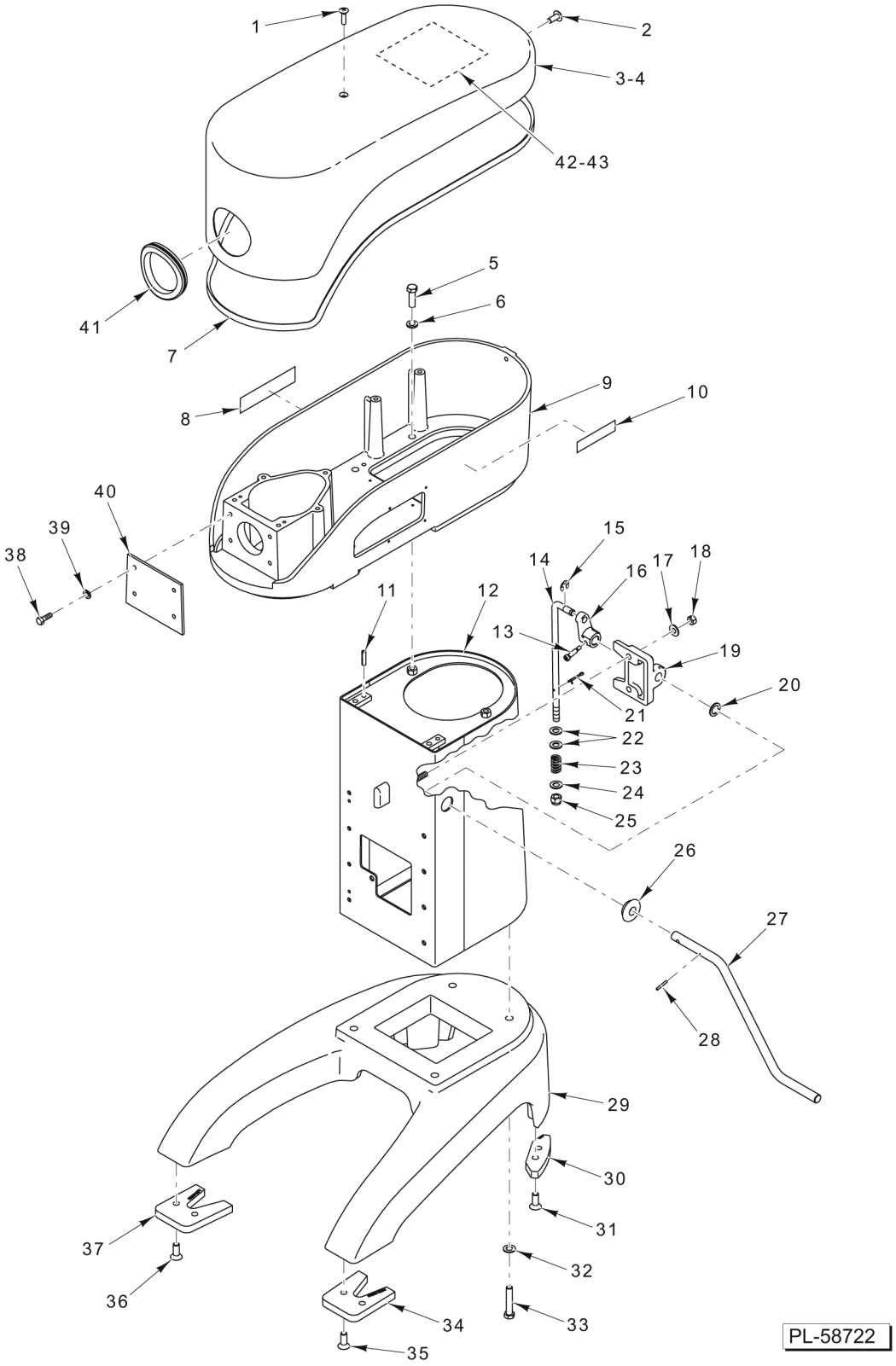

BASE AND PEDESTAL

BASE AND PEDESTAL

ILLUS. PL-58722	PART NO.	NAME OF PART	AMT.
1	SC-120-29	Mach. Screw 1/4-20 x 1 Phil. Oval Hd	1
2	SC-130-16	Mach. Screw 5/16-24 x 3/4 Phil. Truss Hd	1
3	00-917118	Cover - Top (With Hub) (ML-134387 & ML-134388)	1
4	00-917118-00002	Cover - Top (Without Hub) (ML-134398 & ML-134399)	1
5	SC-118-09	Cap Screw 3/8-16 x 1-1/4 Hex Hd	2
6	WL-004-06	Lockwasher 3/8 Helical	2
7	00-874925-00007	Seal - Neoprene	1
8	00-917341	Logo - Berkel (Large)	1
9	00-917067-00002	Transmission	1
10	00-916992	Logo (Berkel)	1
11	RP-006-37	Pin - Roll	1
12	00-917071	Pedestal - Weldment	1
13	SC-086-49	Shoulder Screw 10-24 x 1 Hex Socket Hd	1
14	00-917824	Rod - Bowl Lift	1
15	RR-012-42	Retaining Ring	2
16	00-917089-00003	Arm - Bowl Lift	1
17	WS-017-16	Washer	2
18	NS-013-14	Nut 5/16-18 Hex	2
19	00-917082-00003	Bearing - Bowl Lift	1
20	WS-020-01	Washer (SST)	1
21	PC-003-55	Cotter Pin 1/8 x 3/4	1
22	WS-006-26	Washer	2
23	00-012782	Spring	1
24	WS-006-26	Washer	1
25	NS-036-15	Stop Nut 3/8-24 Hex Special	1
26	00-439586	Grommet	1
27	00-917826	Handle - Bowl Lift	1
28	RP-002-25	Roll Pin 1/8 Dia. x 7/8 Lg	1
29	00-917065-00002	Base	1
30	00-917166	Pad - Rear	2
31	SC-061-15	Cap Screw 3/8-16 x 1 Hex Flat Hd	4
32	WS-006-26	Washer	4
33	SC-118-07	Cap Screw 3/8-16 x 2 Hex Hd	4
34	00-917165-00002	Pad - Front (RH)	1
35	SC-061-15	Cap Screw 3/8-16 x 1 Hex Flat Hd	2
36	SC-061-15	Cap Screw 3/8-16 x 1 Hex Flat Hd	2
37	00-917165-00001	Pad - Front (LH)	1
38	SC-062-07	Cap Screw 5/16-18 x 1/2 Hex Hd. (ML-134398 & ML-134399)	4
39	WL-003-47	Lockwasher 5/16 Helical (ML-134398 & ML-134399)	4
40	00-917273	Plate - Attachment Hub Closeoff (ML-134398 & ML-134399)	1
41	00-917128	Grommet - Attachment Hub (ML-134387 & ML-134388)	1
42	0F-037216	Diagram - Wiring (ML-134387 & ML-134398)	1
43	0F-037217	Diagram - Wiring (ML-134388 & ML-134399)	1

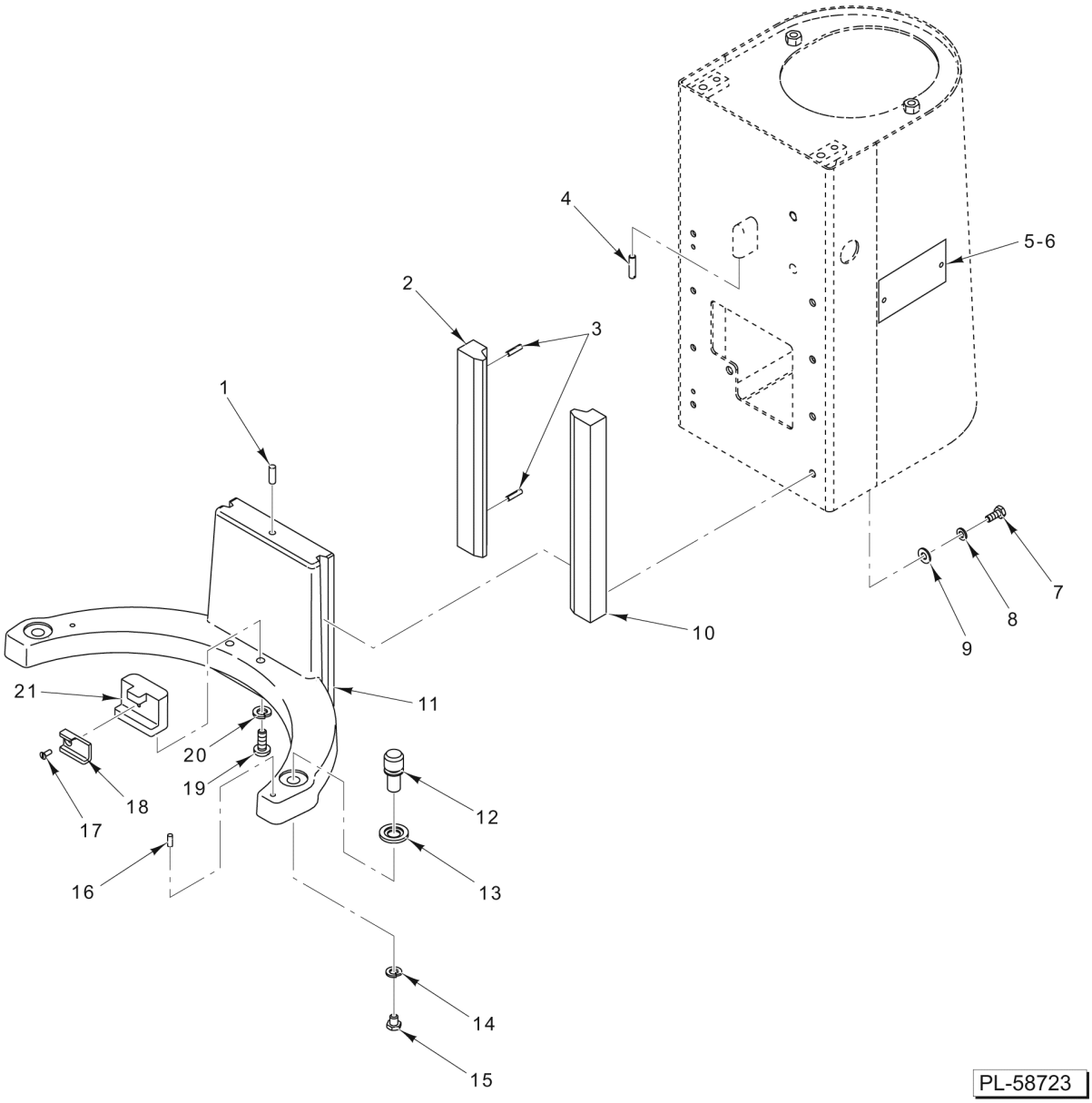

BOWL SUPPORT

BOWL SUPPORT

ILLUS. PL-58723	PART NO.	NAME OF PART	AMT.
1	00-011800-00295	Dowel 1/4 x 3/4 (SST)	1
2	00-917084-00001	Slideway (LH)	1
3	RP-005-09	Pin - Roll	2
4	00-917249	Screw - Adjustment (Bowl Up)	1
5	00-438131-00179	Label - Warning (ML-134387 & ML-134388)	1
6	SD-005-14	Self-Tapping Screw #4 x 1/4 Rd. Hd., Type U (SST)	2
7	SC-110-12	Cap Screw 1/4-20 x 5/8 Hex Hd	8
8	WL-003-38	Lockwasher 1/4 Helical	8
9	WS-017-25	Washer	8
10	00-917084-00002	Slideway (RH)	1
11	00-917117-00002	Support - Bowl	1
12	00-917193	Pin - Bowl Mounting	2
13	00-917180	Bushing - Bowl Support	2
14	WL-003-47	Lockwasher 5/16 Helical	2
15	SC-125-20	Cap Screw 5/16-18 x 3/8 Hex Hd	2
16	PG-006-29	Pin - Grooved (SST)	2
17	SC-130-50	Mach. Screw M3 x 8mm Slotted Flat Hd. (SST)	1
18	00-917511	Bracket - Insert	1
19	SC-130-49	Mach. Screw M6 x 1.0 x 16mm Slotted Flat Hd. (SST)	2
20	WL-019-97	Lockwasher M6 Helical	2
21	00-917510	Bracket	1

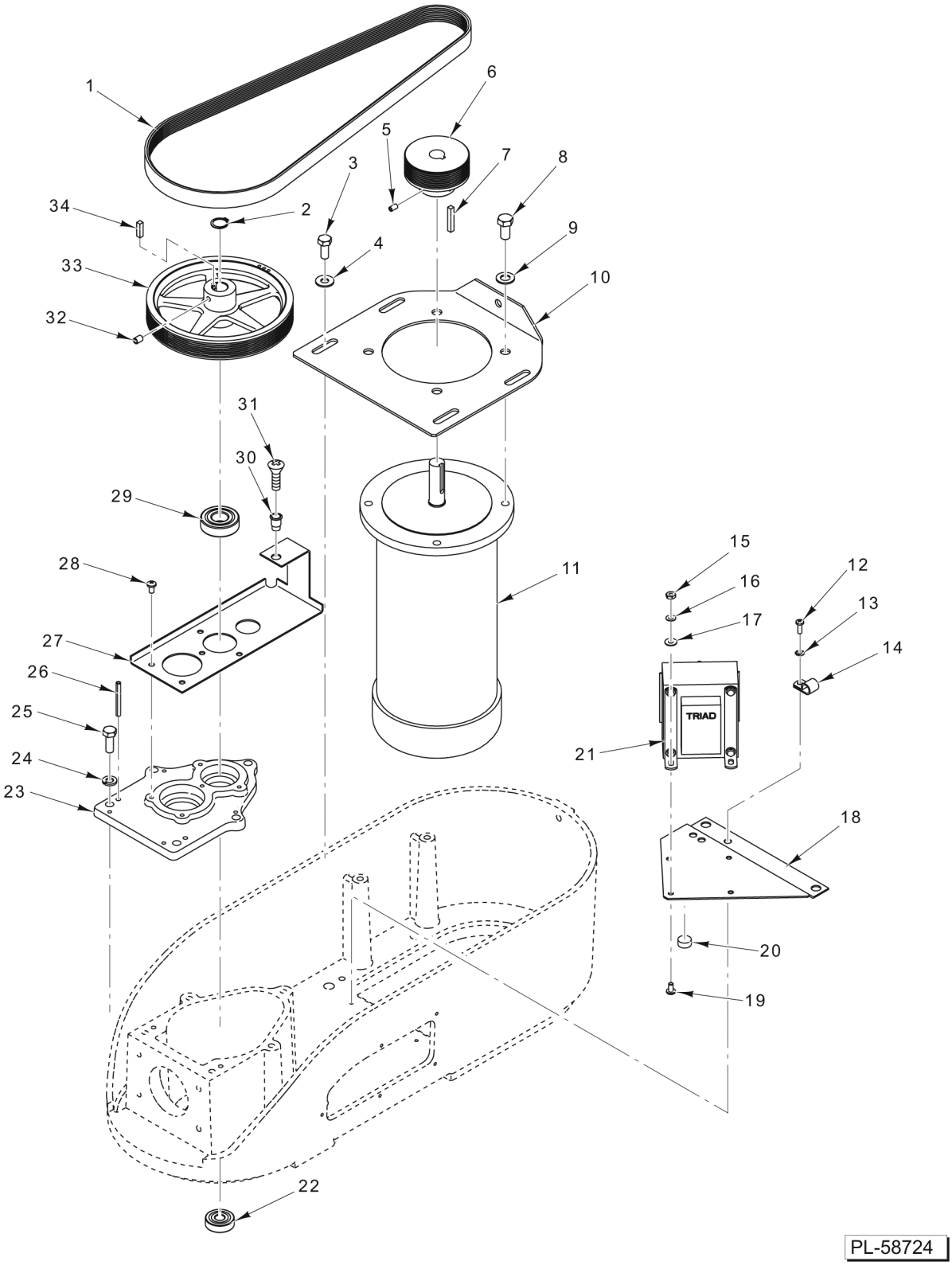

TRANSMISSION CASE AND MOTOR

TRANSMISSION CASE AND MOTOR

ILLUS. PL-58724	PART NO.	NAME OF PART	AMT.
1	00-917502	Belt - V Ribbed	1
2	RR-004-18	Retaining Ring	1
3	SC-117-92	Cap Screw 5/16-18 x 3/4 Hex Hd	4
4	00-291284	Washer - Toothed	4
5	SC-075-36	Set Screw 10-24 x 3/8 Hex Hdls., Cup Pt	1
6	00-917497	Pulley - Driver	1
7	00-917496-00001	Key	1
8	SC-118-12	Cap Screw 3/8-16 x 3/4 Hex Hd	4
9	WL-004-06	Lockwasher 3/8 Helical	4
10	00-917085	Plate - Motor Mounting	1
11	00-917025-00001	Motor (90 V.)	1
12	SC-018-34	Mach. Screw 8-32 x 1/2 Phil. Pan Hd	1
13	WL-007-07	Lockwasher #8 External Shakeproof	1
14	00-078752-00009	Clamp - Cable	1
15	NS-009-22	Nut 10-24 Hex (ML-134387 & ML-134398)	4
16	WL-007-12	Lockwasher 10 External Shakeproof (ML-134387 & ML-134398)	4
17	WS-002-51	Washer (ML-134387 & ML-134398)	4
18	00-917716	Plate - Transformer (ML-134387 & ML-134398)	1
19	SC-093-23	Mach. Screw 10-24 x 3/8 Phil. Pan Hd. (ML-134387 & ML-134398)	4
20	00-916063	Bumper (ML-134387 & ML-134398)	1
21	00-916905-00001	Transformer (175 VA) (ML-134387 & ML-134398)	1
22	BB-005-01	Bearing - Ball	1
23	00-917083-00002	Cover - Transmission Case	1
24	WL-003-47	Lockwasher 5/16 Helical	5
25	SC-062-81	Cap Screw 5/16-18 x 7/8 Hex Hd	5
26	RP-005-09	Pin - Roll	4
27	00-917114	Retainer - Top Bearing	1
28	SC-018-62	Mach. Screw 10-24 x 3/8 Phil. Pan Hd	5
29	BB-005-23	Bearing - Ball	1
30	00-041960	Insert - Threaded	1
31	SC-120-29	Mach. Screw 1/4-20 x 1 Phil. Oval Hd	1
32	SC-047-12	Set Screw 1/4-20 x 3/8 Socket Hdls., Knife Cup Pt	1
33	00-917370	Pulley - Driven	1
34	00-917496-00012	Key 5mm x 5mm x 40mm	1
	00-916972-002-5	Tubing - Convoluted Slit	1

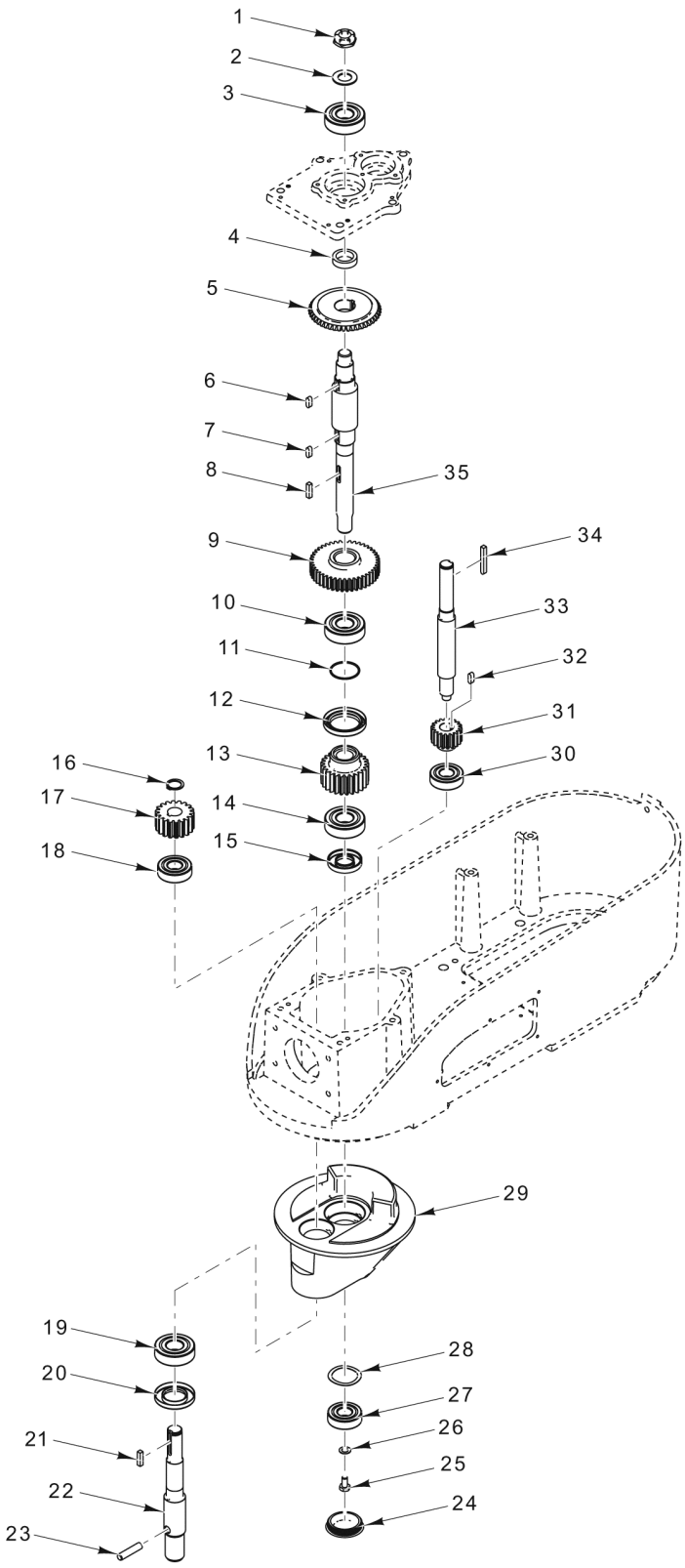

TRANSMISSION

TRANSMISSION

ILLUS. PL-58725	PART NO.	NAME OF PART	AMT.
1	NS-032-37	Lock Nut 5/8-18 Special	1
2	WS-010-41	Washer	1
3	BB-005-34	Bearing - Ball	1
4	00-874793	Spacer - Planetary (ML-134387 & ML-134388)	1
5	00-124733-00002	Gear - Bevel (46T) (ML-134387 & ML-134388)	1
6	00-012430-00046	Key 3/16 x 3/16 x 17/32	1
7	00-012430-00045	Key 3/16 x 3/16 x 9/16	1
8	00-012430-00048	Key 3/16 Sq. x 3/4 Lg	1
9	00-917109	Gear (43T)	1
10	BB-005-46	Ball Bearing - Fafnir 204KDDFS50545	1
11	00-067500-00009	O-Ring	1
12	00-917123	Seal - Center Shaft	1
13	00-917100	Gear - Sun	1
14	BB-005-46	Ball Bearing - Fafnir 204KDDFS50545	1
15	00-439588	Seal - Transmission Case	1
16	RR-011-02	Retaining Ring	1
17	00-439548	Gear - Planetary (Beater)	1
18	BB-020-18	Bearing - Ball	1
19	BB-005-46	Ball Bearing - Fafnir 204KDDFS50545	1
20	00-023482	Seal - Oil (1 In. I.D.)	1
21	00-012430-00048	Key 3/16 Sq. x 3/4 Lg	1
22	00-439522	Shaft - Planetary	1
23	00-065062-00001	Pin - Dowel	1
24	00-439632	Plug Planetary	1
25	SC-090-19	Mach. Screw 1/2-13 x 3/4 Slotted Rd. Hd	1
26	WS-030-04	Washer	1
27	BB-020-18	Bearing - Ball	1
28	SL-005-12	Spring - Loaded	1
29	00-439552-00002	Planetary	1
30	BB-005-01	Bearing - Ball	1
31	00-874777	Gear (18T, 14P)	1
32	00-012430-00007	Key 1/8 x 1/8 x 11/16	1
33	00-917116	Shaft - Input	1
34	00-917496-00012	Key 5mm x 5mm x 40mm	1
35	00-917081	Shaft - Center	1
	00-917179	Center Shaft Assy. (Incls. Items 7, 9, 10, & 35)	1

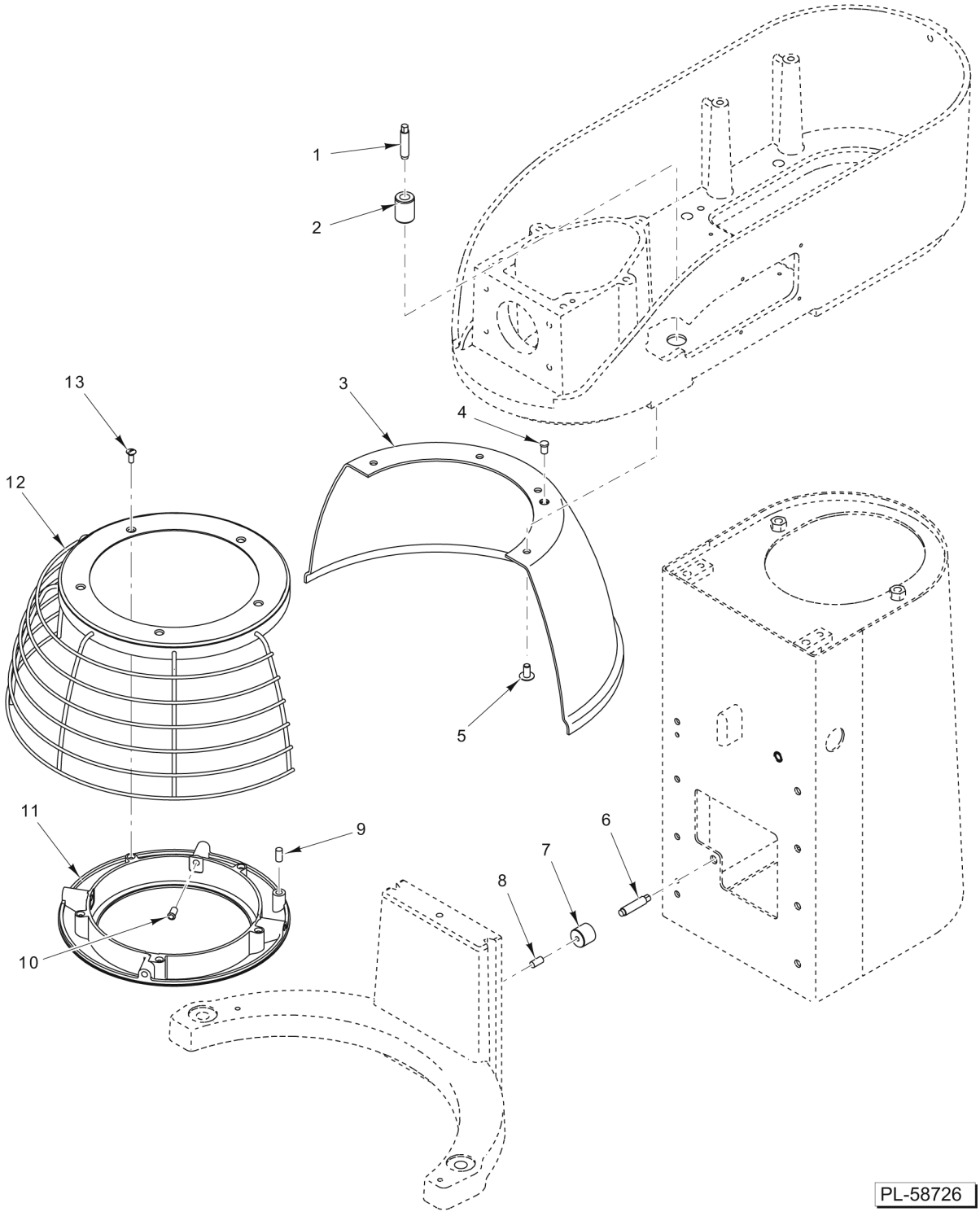

BOWL GUARD AND HEIGHT SENSOR

BOWL GUARD AND HEIGHT SENSOR

ILLUS. PL-58726	PART NO.	NAME OF PART	AMT.
1	00-916902-00003	Switch - Reed	1
2	00-917184	Holder - Reed Switch	1
3	00-917155	Guard - Rear Splash	1
4	00-917281	Pin - Magnet Bridge	1
5	SC-053-41	Mach. Screw 1/4-20 x 1/2 Slotted Truss Hd. (SST)	3
6	00-916902-00003	Switch - Reed	1
7	00-917186	Holder - Magnet	1
8	00-917185	Magnet	1
9	00-917185	Magnet	1
10	00-917056	Plunger - Ball	4
11	00-917152	Ring - Drip	1
12	00-917151	Cage	1
13	SC-023-44	Mach. Screw 10-24 x 1/2 Slotted Oval Hd	5
	00-917150	Wire Cage Assy. (Incls. Items 9 thru 13)	1

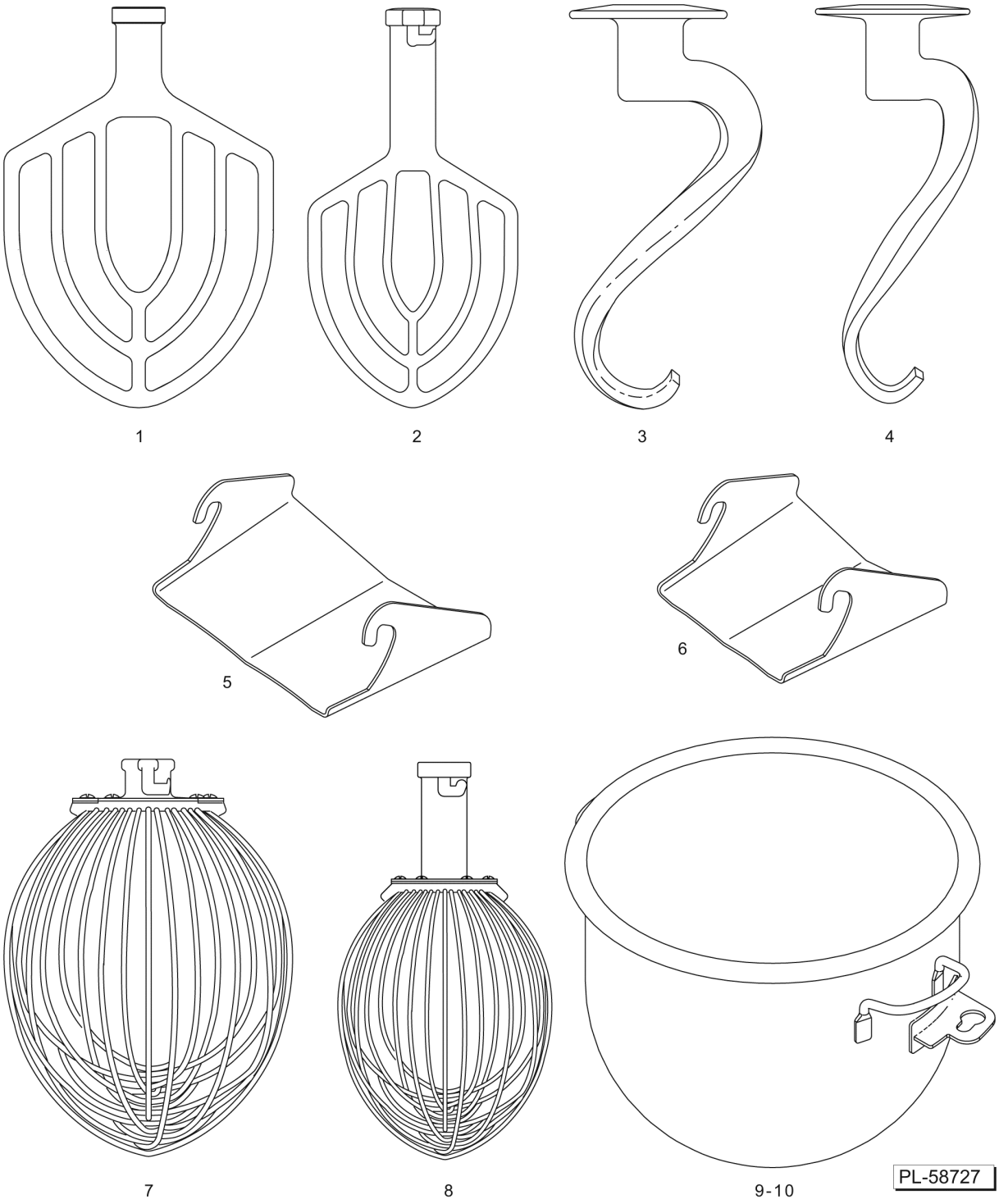

AGITATORS AND ACCESSORIES

AGITATORS AND ACCESSORIES

ILLUS. PL-58727	PART NO.	NAME OF PART	AMT.
1	00-023126-00003	"B" Beater (20 Qt.)	1
2	00-023502-00002	"B" Beater (12 Qt.)	1
3	00-477561-00002	"ED" Hook - Dough Arm (20 Qt.)	1
4	00-917323	"ED" Hook - Dough Arm (12 Qt.) (Packaged)	1
5	00-917320	Chute - Ingredient (20 Qt.)	1
6	00-917321	Chute - Ingredient (12 Qt.)	1
7	00-275897-00004	"D" Wire Whip (20 Qt.)	1
8	00-295027-00005	"D" Wire Whip (12 Qt.) (Packaged)	1
9	00-917190	Bowl (20 Qt.)	1
10	00-917314	Bowl (12 Qt.)	1

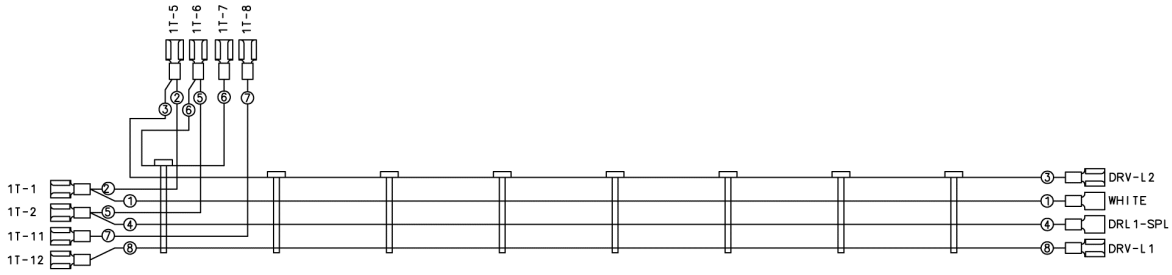

00-917702 Harness - Transformer Boost (120 V. Only)

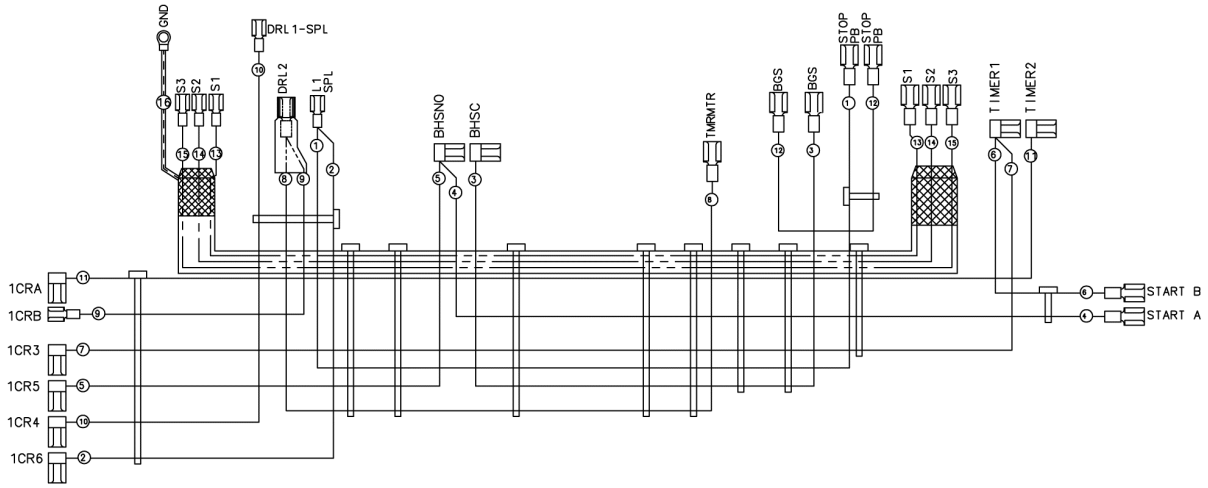

00-917634 Harness - Main Wiring (120 V.)

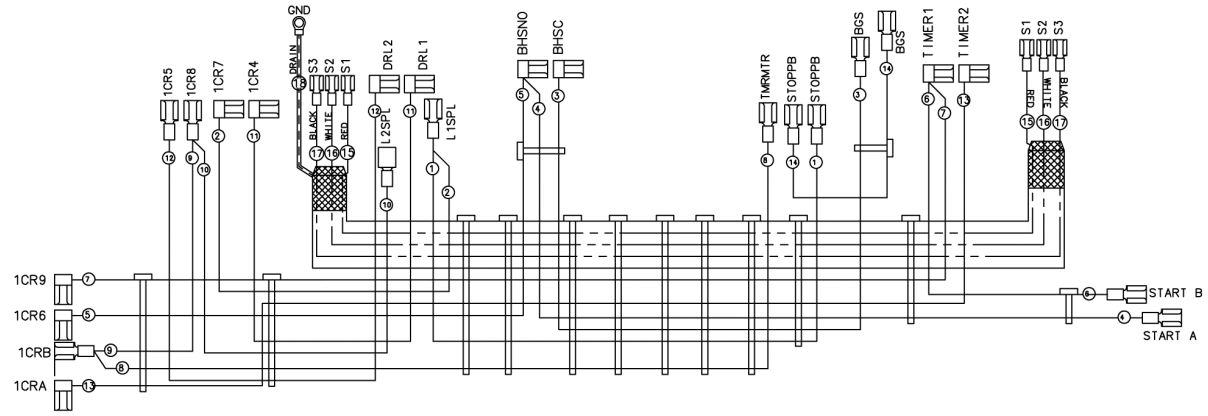

00-917635 Harness - Main Wiring (240 V.)

PL-58728

WIRING HARNESSES

WIRING HARNESSES

ILLUS. PL-58728	PART NO.	NAME OF PART	AMT.
1	00-917702	Harness - Transformer Boost	1
2	00-917634	Harness - Main Wiring (120 V.)	1
3	00-917635	Harness - Main Wiring (240 V.)	1