IMPORTANT FOR FUTURE REFERENCE

Please complete this information and retain this manual for the life of the equipment:

Model #: _____

Serial #: _____

Date Purchased: _____

INSTALLATION & OPERATION MANUAL

Direct Steam Cabinet Base Convection Steamer

DCX-2 DCX-10

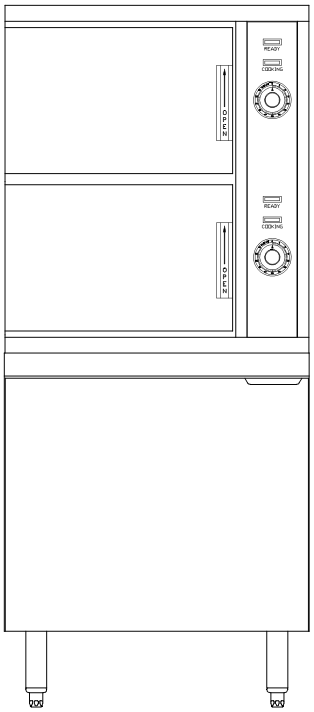

⚠ WARNING

Improper installation, adjustment, alteration, service or maintenance can cause property damage, injury or death. Read the installation, operating and maintenance instructions thoroughly before installing or servicing this equipment.

CROWN FOOD SERVICE EQUIPMENT

A Middleby Company

70 Oakdale Road, Downsview (Toronto) Ontario, Canada, M3N 1V9

Telephone: 919-762-1000 www.crownsteamgroup.com

Printed in Canada

MANUAL 10065R3

IMPORTANT NOTES

	This is the safety alert symbol. It is used to alert you to potential personal injury hazards. Obey all safety messages that follow this symbol to avoid possible injury or death.

	WARNING: Improper installation, operation, adjustment, alteration, service or maintenance can cause property damage, injury or death. Read the installation, operating and maintenance instructions thoroughly before installing, operating or servicing this equipment.

	CAUTION: Operating, testing, and servicing should only be performed by qualified personnel.

NOTICE: Contact the factory, the factory representative or local service company to perform maintenance and repairs.

Intended for commercial use only. Not for household use.

This manual should be retained for future reference.

TABLE OF CONTENTS

DESCRIPTION **PAGE**

Important Notes 2

1.0 Service Connections 4

2.0 Installation Instructions 5

3.0 Operating Instructions 8

4.0 Periodic Maintenance 9

5.0 Troubleshooting 9

6.0 Cooking Chart 10

1.0 SERVICE CONNECTIONS

- ELECTRICAL CONNECTION: 1/2" conduit connection to controls. 120VAC–60–1PH, max. 2 AMPS.
- COLD WATER: 3/8" O.D. tubing at 25–50 PSI(170–345 kPa).
- STEAM SUPPLY: 3/4"IPS for incoming steam at 80 lbs/hr @ 10 psi (36 kg/hr @ 69 kPa) min. 100 PSI (690 kPa) maximum supply pressure.
- Drain: 2" IPS piped to open floor drain. No Solid Connection.

DCX-2, DCX-10

MODEL	SHIPPING WT. (24" CABINET)	SHIPPING WT. (36" CABINET)	MIN. CLEARANCE	
DCX-2	450 lbs. [204 kg]	550 lbs. [249 kg]	SIDES	0
DCX-10	550 lbs. [250 kg]	625 lbs. [284 kg]	BACK	0

REAR FLANGED FOOT DETAIL
2 EQUALLY SPACED
ø7/16" [11mm] HOLES
ON 2.5" [63mm] B.C.

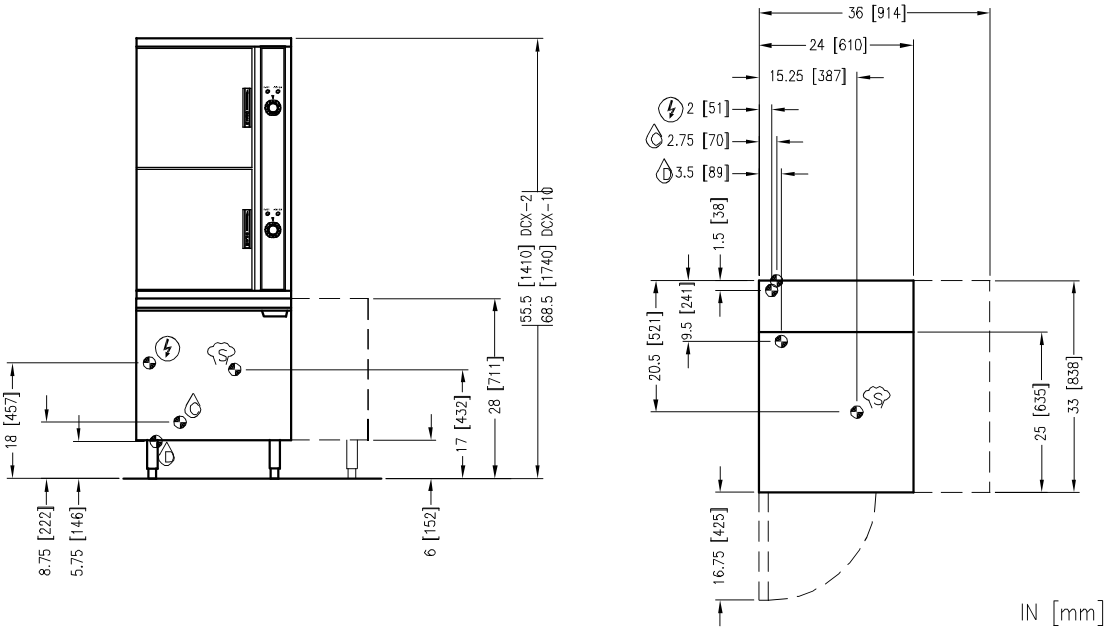

As continued product improvement is a policy of Crown, specifications are subject to change without notice.

2.0 INSTALLATION INSTRUCTIONS

Ideally an exhaust system should be located directly above the appliance to exhaust steam and heat generated by the appliance.

1. Set the unit in place and level using a spirit level.
2. Ascertain that a floor drain (open gap) is convenient to the appliance drain.
3. Mark hole locations on floor through anchoring holes provided in flanged adjustable feet.
4. Remove appliance and drill holes in locations marked on floor and insert proper anchoring devices.
5. Set unit back in position and re-level left to right and front to back.
6. Bolt and anchor appliance securely to the floor.
7. Seal bolts and flanged feet with Silastic or equivalent compound.
8. Make service connections as indicated.

	WARNING: Electrical and grounding connections must comply with applicable portions of the National Electrical Code and/or other local electrical codes.

	WARNING: Disconnect electrical power supply and place a tag on the disconnect switch to indicate that you are working on the circuit.

Use copper wire suitable for at least 90 degrees Celsius. The steamer must be grounded. The wiring diagram is located on the inside right hand panel as you face the steamer.

INFORMATION TO STEAM FITTER

Each cooking compartment requires approximately 1 BHP (50 lbs. of steam per hour minimum) to operate satisfactorily.

Assuming availability of 30 psi supply steam pressure immediately to the appliance, then pipe sizes of ½" or 3/4" or 1" will deliver respectively 90, 165, or 385 lbs. of steam per hour to the appliance. From the foregoing to use ½" pipe line would most likely prove inadequate.

An extremely important consideration is the pressure drop that will occur through the steam supply line from its point of origin to the appliance. The greater the length of piping and number of valves and elbows, the greater the pressure losses.

Consider a pressure drop of 1 (one) psi for each straight length of pipe equivalent to 120 diameters of that pipe. Thus, a 1" pipe having a straight length of 120" (10 feet) is equivalent to 120 diameters of that pipe and will have a pressure loss of 1 psi through that pipe.

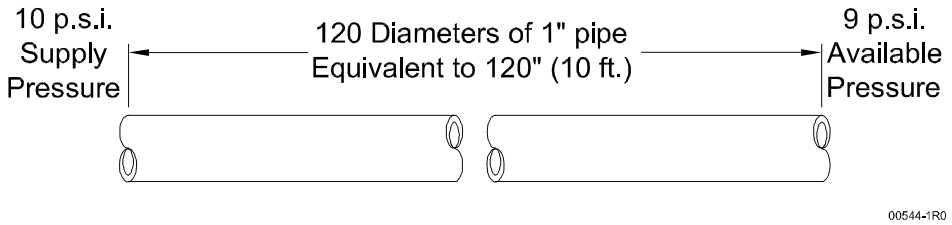

INSTALLATION AND SERVICE CONNECTIONS

Note, in 3/4" pipe size, that a Standard 90 Elbow, an Angle Valve and a Globe Valve are equivalent to 1.8 feet, 10 feet and 18 feet respectively of straight pipe.

Similarly, in 1" pipe size, a standard 90 elbow, and Angle Valve and a Globe Valve are equivalent to 2.2 feet, 12 feet and 23 feet respectively of straight pipe.

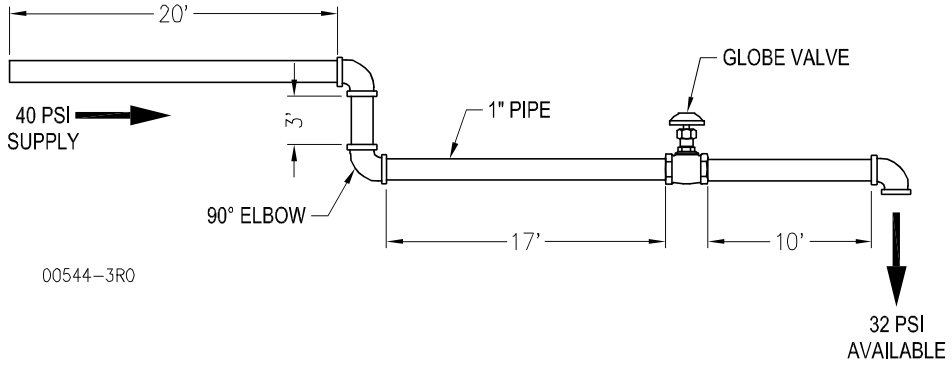

Total of above = 20 + 2.2 + 3 + 2.2 + 17 + 23 + 10 + 2.2 + 79.6 feet. Since each 10 foot is equivalent to 1 psi pressure loss, 79.6 feet is equivalent to approximately 32 psi from an original boiler supply of 40 psi.

It is suggested that, wherever possible, the steam supply line to the appliance be a separate line from the steam source. If the appliance must be supplied from a line supplying other appliances, the pipe sizes and pressure will have to be verified. Further, during idle periods, when the steam in the supply line is not in use, water will form from condensed steam in the supply line and it is advisable to prevent water pockets from forming in the steam line and impeding the steam flow when it is required. Therefore, contrive to have the steam supply line level or run slightly downwards towards the appliance. Install a Ball Float Trap near the appliance to drain out water (condensed steam) from the line to assure clean dry steam to the appliance.

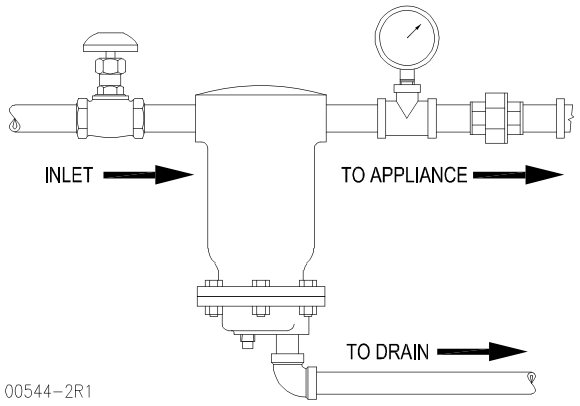

3.0 OPERATING INSTRUCTIONS

	CAUTION: Live steam and accumulated hot water in the compartment may be released when the door is opened.

START-UP

Start-up procedures for your steamer must be completed once daily prior to operation.

1. Turn on the water and steam supply to the appliance.

2. Open the cabinet door and turn the power switch to ON. A pilot light comes on indicating the appliance is ready to begin operation. With the READY pilot light on, preheat steamer compartment for one minute when the steamer is to be first used for the day or whenever the compartment is cold.

OPERATION

1. With cooking compartment preheated and ready pilot light on, place pans of food to be cooked into compartment and shut door.

2. Set timer to cooking time desired. Cooking cycle may be interrupted at any time by opening door and resumed again by closing door.

3. When buzzer sounds, it indicates the end of the cooking cycle and that no more steam is entering the compartment. Cooking pilot light will go off and ready pilot light will come on. Buzzer must be shut off by turning the timer to its off position.

	CAUTION: An obstructed drain can cause personal injury or property damage.

Frequently check that the compartment drain and plumbing is free of all obstructions. Never place food containers, food or food portion bags in the cooking compartment in such a way that the compartment drain becomes obstructed.

Each compartment is equipped with a removable drain screen. Frequently check the drain screen for accumulation of food particles. Should food particles accumulate against, or clog the drain screen, remove it, clean it thoroughly and then replace it in its original position.

3.0 OPERATING INSTRUCTIONS (continued)

SHUT DOWN

1. To shut down cooking compartment, set timers to their OFF position and leave doors slightly open.

2. At the end of the day, open the door of the cabinet base and turn off the power switch. Turn off external steam supply valve.

4.0 PERIODIC MAINTENANCE

	CAUTION: Disconnect the power supply during cleaning or servicing.

CLEANING

1. Keep exposed cleanable areas of unit clean at all times.

2. Thoroughly wash oven cavities, door liners, and pan racks at the end of each day or as required with a mild detergent and water to prevent bacterial growth and odours.

3. Remove drain screens from inside compartment drains. Using a plastic bottle brush and mild detergent, clean inside the drain opening ensuring there is no food residue or blockage. Clean the drain screen and replace in its original position.

4. Wash gasket sealing surface with mild detergent to remove harmful food acids and rinse.

5. Keep all exposed cleanable areas of unit clean at all times. DO NOT GET WATER IN ELECTRICAL BOX OR ANY ELECTRICAL COMPONENTS.

5.0 TROUBLESHOOTING

DOOR LEAKS

1. Check for damage to door gasket.

2. Gasket may be adjusted if necessary by turning counter clockwise the screws in the gasket plate.

WATER ACCUMULATES IN THE COMPARTMENT

1. Compartment drain screen clogged, remove and clean thoroughly and then replace.

6.0 COOKING CHART

The following table lists suggested cooking times and weights. These times, which will vary depending on initial product temperature, size, shape, etc., are approximate and should be adjusted to suit your operation.

PRODUCTS TO BE COOKED IN SOLID PANS		
PRODUCT	**TIMER SETTING IN MINUTES**	**WEIGHT PER PAN**
Eggs, Scrambled	10 - 12	8 Dozen
Rice, Long Grain (Cover with 4 cups water/lb)	25	2 Lb
Pasta (Place perforated pan inside solid pan, cover pasta with cold water) Spaghetti - Regular/Vermicelli Macaroni - Shells/Elbows Noodles - ½" Wide Lasagna Noodles	 12 - 15 15 - 18 12 - 15 15 - 18	
Frozen Casseroles, Lasagna	35	Full Pan
Meat Loaf, 3 - 5 Lb Each	40	15 Lb
Beef Ground Chuck Slices as Purchased	 20 - 25 35 - 40	 10 Lb 10 Lb
Shrimp, Frozen, 10 Shrimp per Lb	5	4 Lb
Beans Baked Refried	 9 9	 10 Lb Can 10 Lb Can
Canned Vegetables	6	10 Lb Can
Prunes, Dried	12 - 15	

PRODUCTS TO BE COOKED IN PERFORATED PANS		
PRODUCT	**TIMER SETTING IN MINUTES**	**WEIGHT PER PAN**
Clams Frozen Fresh, Cherrystone	 10 - 12 5 - 6	 3 Dozen 3 Dozen
King Crab, Frozen Claws Legs	 4 4 - 6	 2 ½ Lb 4 ½ Lb
Lobster Tail, Frozen Lobster, Live, 10" - 12"	6 5	10 Lb 4 Per Pan
Salmon Fillets, Frozen, 8 oz Each	5	7 ½ Lb
Scallops, Fresh	4	3 Lb
Scrod Fillets, Fresh	3 - 5	4 Lb
Eggs Hard Cooked Soft Cooked Soft Yolk for Caesar Salad	 15 9 - 10 6 - 8	 4 Dozen 4 Dozen 4 Dozen
Chicken, Breasts, Legs, Thighs	20	15 Lb
Turkey, Frozen Breasts (2) Cut Lengthwise	 90 55	 6 - 7 Lb Ea. 20 - 25 Lb
Corned Beef	40 - 75	6 - 8 Lb
Hot Dogs or Wieners	3	80 - 100 Count
Asparagus Spears Frozen Fresh	 10 - 12 5	 3 Dozen 5 Lb
Beans Green, 2" Cut, Frozen/Fresh Lima, Frozen Baby Lima, Frozen	 6 8 5	 5 Lb 5 Lb 5 Lb

PRODUCTS TO BE COOKED IN PERFORATED PANS		
PRODUCT	**TIMER SETTING IN MINUTES**	**WEIGHT PER PAN**
Broccoli		
Spears, Frozen	8	4 Lb
Spears, Fresh	6	5 Lb
Flowerettes, Frozen	6	5 Lb
Brussel Sprouts, Frozen	6	5 Lb
Cabbage, Fresh, 1/6 Cut	8	5 Lb
Carrots		
Baby Whole, Frozen	8	7 Lb
Crinkle Cut, Frozen	7 - 8	4 Lb
Sliced, Fresh	11	9 Lb
Cauliflower, Flowerettes		
Frozen	6	4 Lb
Fresh	7 - 8	5 Lb
Celery, 1" Diagonal Cut	7	5 Lb
Corn		
Yellow Whole Kernel, Frozen	5	5 Lb
Cobbettes, Frozen	8	27 Ears
	16-18	80 Ears
Corn-On-Cob, Fresh	10-12	18 Ears
	16-18	54 Ears
Peas, Green	6	5 Lb
Potatoes, Whole Russet	55	10 Lb
Spinach		
Chopped, Frozen	17	6 Lb
Defrosted	5	6 Lb
Fresh Cut	3	2 Lb
Squash, Acorn, Halves	25	10 Halves
Zucchini, Slices	8	10 Lb
Frozen Mixed Vegetables	6 - 7	5 Lb

PRODUCTS TO BE COOKED IN PERFORATED PANS		
PRODUCT	**TIMER SETTING IN MINUTES**	**WEIGHT PER PAN**
Fruit, Blanch for Peeling Grapefruit Oranges	3	
Pineapple, Whole for Cutting	4	

COOKING HINTS

Where possible, spread food out evenly in pans. Do not allow food to protrude above pans, since this will interfere with steam circulation between pans in the compartment.

Always preheat compartments for satisfactory results. When time does not allow for defrosting of frozen vegetables, such as loose-pack peas, corn diced carrots, etc., they may be cooked at once provided just half of the suggested portions in the cooking chart are used.