ELECTRO FREEZE®

Operator's Manual

with Illustrated Parts List

Batch Freezer Model B12 and B24

184891 10/05

H.C. Duke & Son, Inc. P/N 184891 Octobert 2005 Printed In U.S.A.

Operator's Manual
for
Batch Freezer
Models B12 and B24

All contents © Copyright 2005 H.C. Duke & Son, Inc., 2116 Eighth Avenue, East Moline, Illinois 61244

SAFETY FIRST!

Follow these four steps to safety ....

1. Recognize Safety Information ....Look for this safety alert symbol throughout this manual.

When you see this symbol on your freezer or in this manual, be alert to the potential for personal injury. Follow recommended precautions and safe operating practices.

2. Understand Signal Words ....

The signal words — DANGER, WARNING and CAUTION — are used with the safety alert symbol (DANGER decals on the freezer may or may not have the safety alert symbol, but the message is the same). Decals with the words DANGER, WARNING or CAUTION appear on the freezer. DANGER identifies the most serious hazard. Decals with the words DANGER or WARNING are typically near specific hazards on the freezer. General precautions are listed on CAUTION safety decals. In this manual, CAUTION messages with the safety alert symbol ⚠ call attention to safety messages.

SAFETY FIRST! - continued

3. Follow Safety Instructions ....

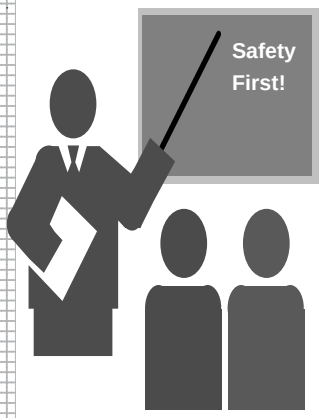

Read and understand all safety messages in this manual. Read and understand the decal safety messages on your freezer. Take notice of the location of all decals on the freezer and keep the safety decals in good condition. Check them periodically and replace missing, damaged or illegible safety decals. The safety decals must remain in place and legible for the life of the freezer. If you need new decals, use the information and illustrations on pages iv and v of this manual to identify the decals and order replacements.

DO NOT attempt to operate the freezer until you read and understand all safety messages and the operating instructions in this manual.

4. Operate Safely ....

DO NOT allow untrained personnel to maintain or service this machine. Failure to follow this instruction may result in severe personal injury. ***DO NOT*** operate the freezer unless all service panels and access doors are secured with screws. ***DO NOT*** attempt to repair the freezer until the main power supply has been disconnected. Contact your local Electro Freeze Distributor for authorized service.

Safety Decal Locations

Do not attempt to operate the freezer until all safety precautions and operating instructions in this manual are read and understood.

Take notice of all warning, caution, instruction and information decals (or labels) on the freezer as shown in the figure to the right. The labels have been put there to help maintain a safe working environment.

The labels have been designed to withstand washing and cleaning. All labels must remain legible for the life of the freezer. Check labels periodically to be sure they can be recognized as warning labels.

If it is necessary to replace *any* label, please contact your local authorized Electro Freeze Distributor or H. C. Duke & Son, Inc. When ready to order, you will need to determine the (1) part number, (2) type of label, (3) location of label, and (4) quantity required, and include a return shipping address.

You may contact your local authorized Electro Freeze Distributor, as follows:

Name: _____

Address: _____

_____

Phone: _____

or — for factory service assistance — contact H. C. Duke & Son, Inc., Electro Freeze Service Department by phone, fax or e-mail:

Phone: (309) 755-4553
(800) 755-4545

Fax: (309) 755-9858

E-mail: service@hcduke.com

(The decals on the next page are numbered 1, 2, 3 and 4. Those numbers correspond to the numbers in the table below. The table provides the part number, description, and quantity for each decal.)

No.	Part No.	Description (Qty)
1	HC165025	Decal — Beater Warning (1)
2	HC165126-01	Decal — Panel Removal Batch (3)
3	HC164171	Decal — Ventilation 6” & 20” (Air Cooled) (1)
4	HC164172	Decal — Ventilation 3” & 4” (Water Cooled) (1)

Safety Decal Locations - continued

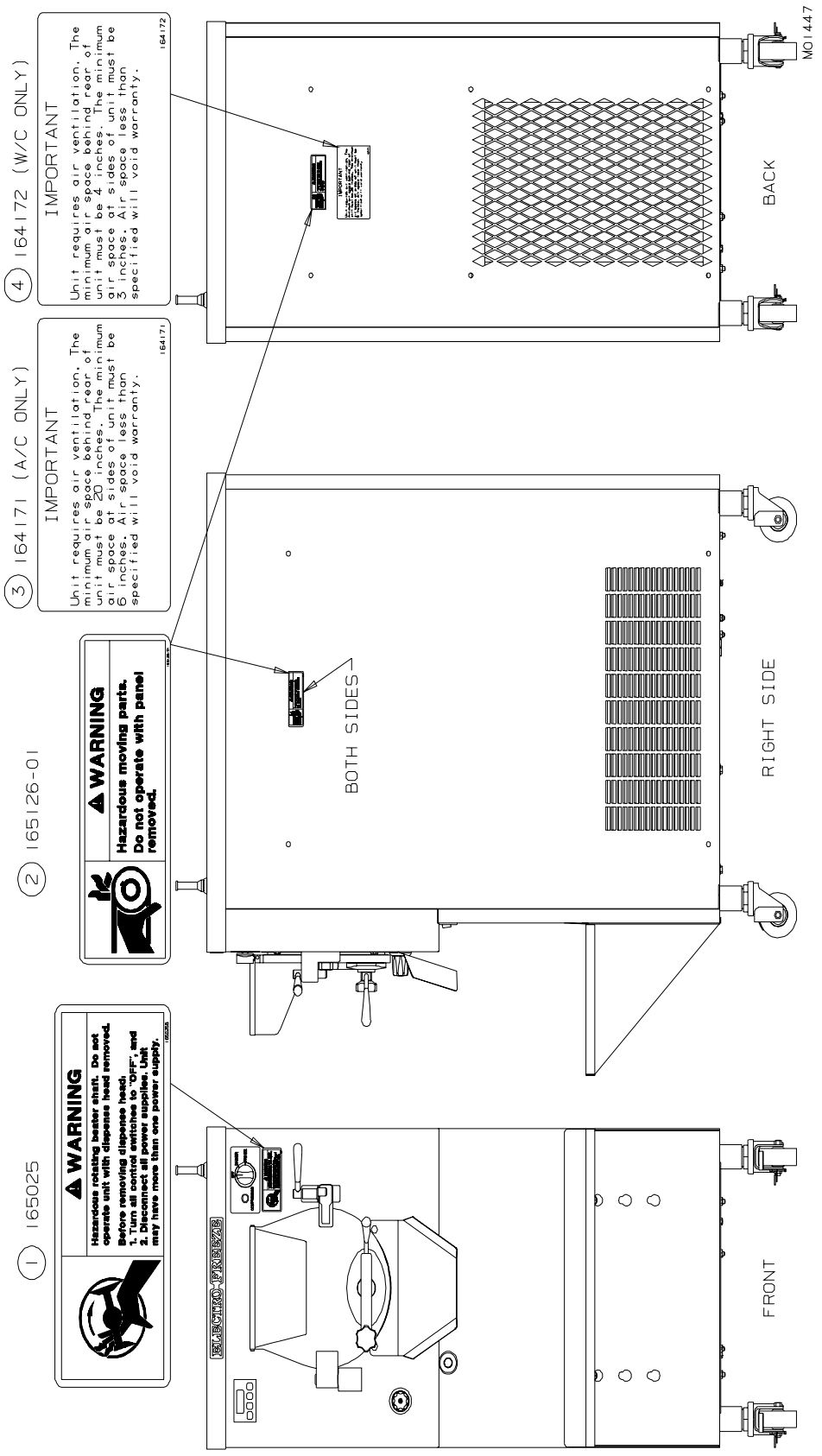

Table of Contents

Safety First ii
Safety Decal Locations iv

Part I

1 Introduction 1
2 Note to Installer 1
2.1 Uncrating and Inspection 2
2.2 Installation 3
2.3 Electrical Requirements 4
2.4 Electrical Connections 4
3 Specifications 5
3.1 Particulars 5
3.2 Data Plate 6
3.3 Reference Information 6
3.4 Installation Date 7
3.5 Dimensions 8
4 Part Names and Functions 10
5 Operator Controls and Indicators 12
5.1 DigitalTimer 13
5.2 Rinse/Fill Valve 13
5.3 Rinse/Fill Hose 13
5.4 Compressor Light 13
5.5 Dasher Switch 13

Table of Contents - continued

6 Digital Timer 14
6.1 Digital Timer Keys 14
6.2 Digital Timer Setup 15
6.3 Digital Timer Operation 16
7 Disassembly and Cleaning 17
7.1 Cleaning Accessories 17
7.2 Disassembly Instructions 18
7.3 Cleaning Instructions 20
8 Assembly 21
9 Start-up Instructions 23
9.1 Sanitizing Instructions 23
9.2 Product Preparation 24
9.3 Freezing Product 24
9.4 Overrun 25
10 Closing Procedures 26
10.1 Draining Product 26
11 Routine Maintenance 27
12 Troubleshooting Tables 31

Part II

Models B12 and B24 Replacement Parts Manual with Illustrations* ..... * Refer to Part II Table of Contents for help with locating part numbers and illustrations.

1 Introduction

Batch freezer models B12 and B24 are designed to produce Italian Ice, water ice and ice cream with a product serving temperature range of 18 to 25° (-7.8 to -4°C). Use of other products in this machine is considered misuse (see Warranty).

This manual has been prepared to assist you in the proper operation and general maintenance of the *Electro Freeze* models B12 and B24 Batch Freezer.

Make sure all personnel responsible for equipment operation completely read and understand this manual before operating the freezer. When properly operated and maintained, the freezer will produce a consistent quality product.

If you require technical assistance, please contact your local authorized *Electro Freeze* Distributor, as follows:

Name: _____

Address: _____

_____

Phone: _____

For factory service assistance — contact H. C. Duke & Son, Inc., *Electro Freeze* Service Department as follows.

Phone: (309) 755-4553

(800) 755-4545

FAX: (309) 755-9858

E-mail: service@hcduke.com

2 Note to Installer

This freezer must be installed and serviced by an *Electro Freeze* Distributor or authorized service technician in accordance with the installation instructions.

After installation the warranty registration card must be completed and returned to validate the warranty.

2.1 Uncrating and Inspection

CAUTION

Be sure to properly support the machine when removing bolts and installing legs or casters.

When the unit is received and while the carrier is still present, inspect the shipping carton for any damage that may have occurred in transit. If the SHOCKWATCH® label indicates red and/or the carton is broken, torn, or punctured, note the damage on the carrier's freight bill and notify the carrier's local agent immediately.

1. Remove the carton from the pallet, and move the machine as close as possible to the permanent location.

2. Remove the shipping bolts on the bottom of the freezer (figure 2-1) and install the casters (figure 2-2).

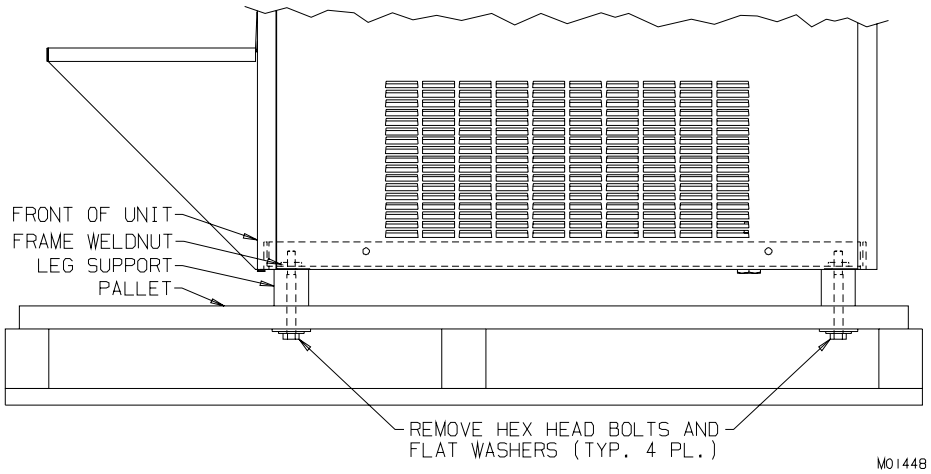

Figure 2-1 Machine Bolted to Shipping Base

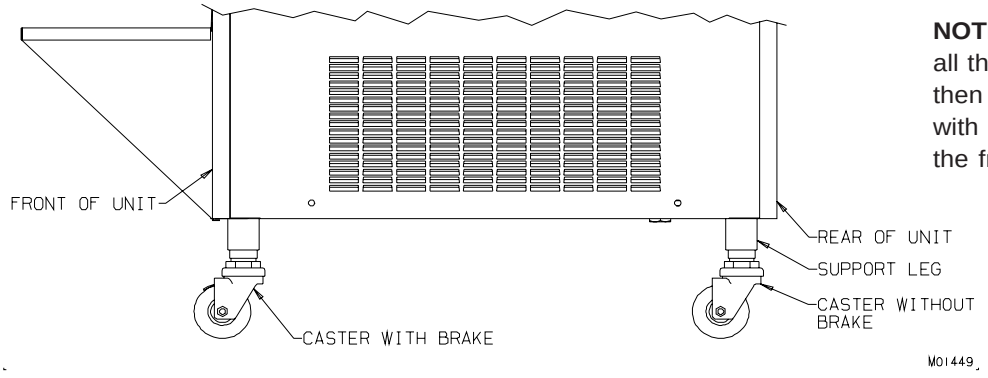

NOTE: Screw casters all the way in coupling, then adjust out to level with 1/4 inch slope to the front.

Figure 2-2 Installing Mounting Legs or Casters

2.2 Installation

CAUTION

All materials and connections must conform to local requirements and be in compliance with the National Electrical Code (NEC).

1. Where codes permit, we recommend that the freezer be installed on casters and have flexible water and electrical connections for easier service and cleaning.

2. Freezers require a specific amount of air space to operate efficiently. Water cooled models require a minimum 4-inch clearance on the rear panel and 3-inch clearance on both side panels for adequate ventilation. Air cooled models require a minimum 20-inch clearance on the rear panel and 6-inch clearance on both side panels for adequate ventilation.

3. On water cooled models, a 1/2-inch FPT cold water inlet and 1/2-inch FPT water waste connection are provided on the bottom of the freezer. They are tagged “Water Inlet” and “Water Waste.” A manual shut-off valve should be installed in the water inlet line at the time of installation. The water pressure must be between 35-140 psig (241-965 kPa) for proper operation. Male adapters are available from your distributor to provide a 3/4-inch female swivel hose connection. During operation, check floor drain to be sure it can handle draining capacity.

4. A 1/2-inch potable cold water connections is provided to supply the rinse/fill valve. When connecting water hose to fitting, be sure the water hose is a certified potable water grade type.

5. Place the freezer in its final location and adjust the casters so that it is level side-to-side and the front is approximately 1/4-inch lower than the rear to allow proper drainage of the freezing cylinder.

2.3 Electrical Requirements

CAUTION
To prevent accidental electrical shock, a receptacle with a positive earth ground is required.

1. Always verify electrical specifications on the data plate (figure 3-1) of each individual freezer. Data plate specifications will always supersede the information in this manual.

2. Supply voltage must be within ± 10% of voltage indicated on the nameplate. Voltage fluctuations with the machine in operation must not be more than 10% of the nominal nameplate rating. Request your local power company to correct any voltage problem.

3. An easily accessible main power disconnect must be provided for all poles of the wiring to the freezer.

2.4 Electrical Connections

CAUTION
To prevent accidental electrical shock, a receptacle with a positive earth ground is required.

1. Check the data plate (figure 3-1) for fuse size, wire ampacity, and electrical specifications.

2. Refer to the wiring diagram provided for proper power connections.

3. Electrical connections are made in the junction box located behind the left, side panel.

4. For 3 phase freezers dasher shaft rotation must be counterclockwise as viewed from the front of the freezer.

3 Specifications

3.1 Particulars

B12

Width (in/cm)	24-3/16 / 61.54
Height (in/cm)	53-7/16 / 135.7
Depth	
Air Cooled (in/cm)	36 / 91.4
Water Cooled (in/cm)	36 / 91.4
Weight (lbs/kg)	655 / 297
Voltage*	208-230 / 60 / 1 208-230 / 60 / 3
Min.Circuit Ampacity	
1 Phase	30
3 Phase	20
Compressor	2HP / 11,800 BTUH

Beater Motor	2 HP / 1.5 kw
Refrigerant	R-404a
Charge	
Air Cooled (lb/kg)	3 / 1.40
Water Cooled (lb/kg)	1.38 / .63
Cooling	Air or Water
Cylinder (qts/ltr)	14 / 13.3

*Contact factory for other voltages.

B24

Width (in/cm)	24-3/16 / 61.4
Height (in/cm)	53-7/16 / 135.7
Depth	
Air Cooled (in/cm)	49 / 116.7
Water Cooled (in/cm)	36 / 91.5
Weight (lbs/kg)	790 / 358
Voltage*	208-230 / 60 / 1 208-230 / 60 / 3
Min.Circuit Ampacity	
1 Phase	40
3 Phase	30
Compressor	3HP / 21,000 BTUH

Beater Motor	3 HP / 2.3 kw
Refrigerant	R-404a
Charge	
Air Cooled (lb/kg)	3.31 / 1.50
Water Cooled (lb/kg)	2.38 / 1.08
Cooling	Air or Water
Cylinder (qts/ltr)	26 / 24.6

*Contact factory for other voltages.

3.2 Data Plate

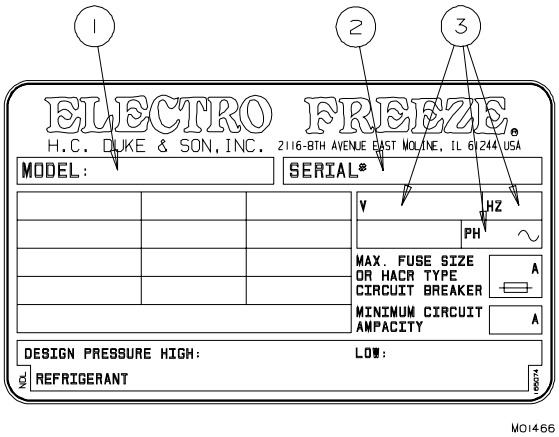

Figure 3-1

The data plate provides important information that the operator should record and have available for parts ordering, warranty inquiries and service requests.

3.3 Reference Information

Write in Reference Information HERE!

Fill in the following information as soon as you receive the freezer. (The item numbers —encircled, below — correspond to the callout numbers in figure 3-1.)

(1) Model Number: _____

(2) Serial Number:_____

(3) Electrical Spec: Voltage _____

Phase _____ Hertz _____

3.4 Installation Date

Fill in the date of installation, and the name, address, and phone number of the installer in the space provided below. This information will be needed when ordering parts or service for the freezer.

Date of installation: _____

Installed by: _____

Address: _____

_____

Phone: _____

3.5 Dimensions

The dimensions of the B12 freezers are provided in figure 3-2, below.

Model B12

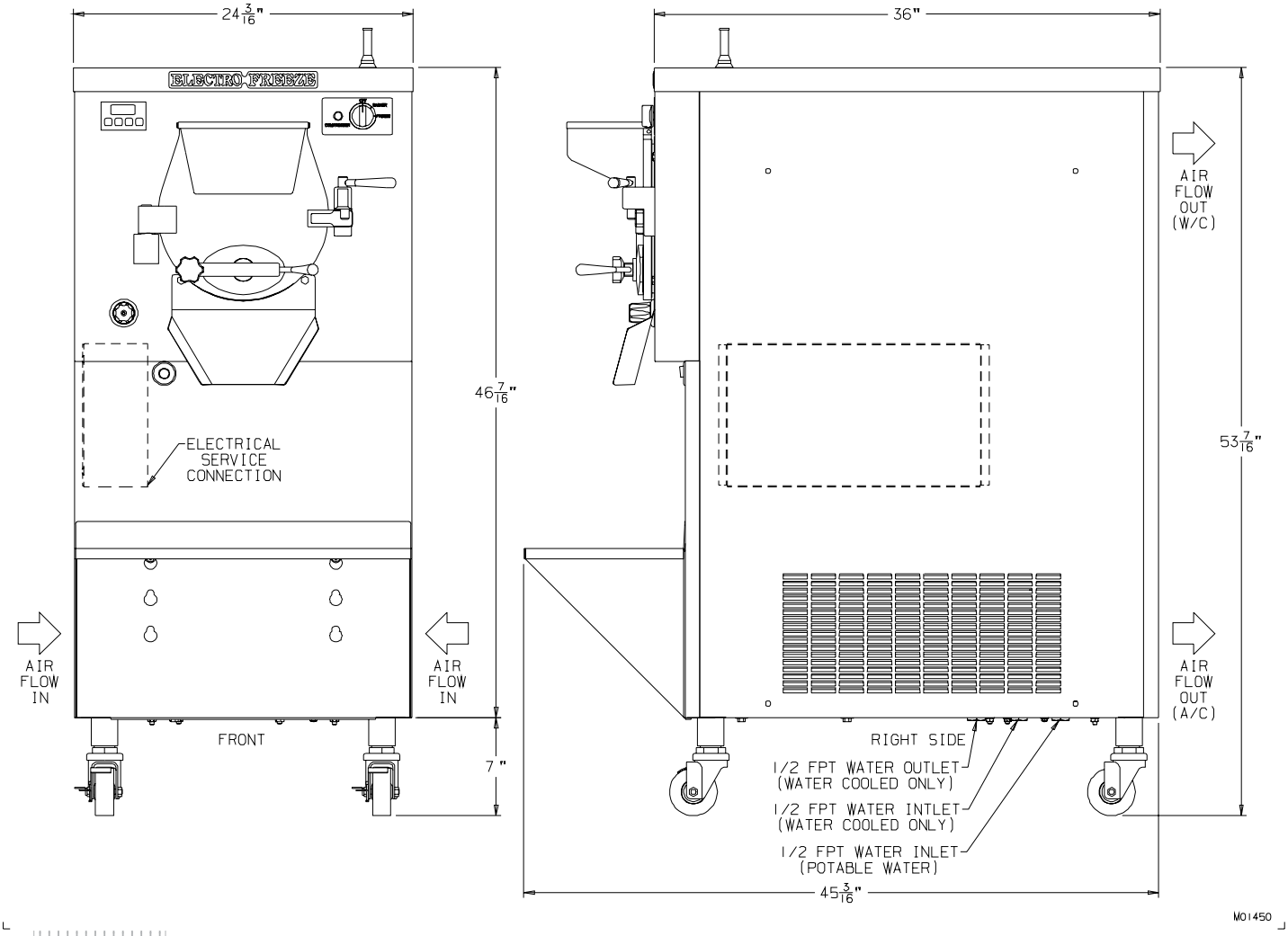

Figure 3-2 Dimensions B12

– continued

3.5 Dimensions (continued)

The dimensions of the B24 freezers are provided in figure 3-3, below.

Model B24

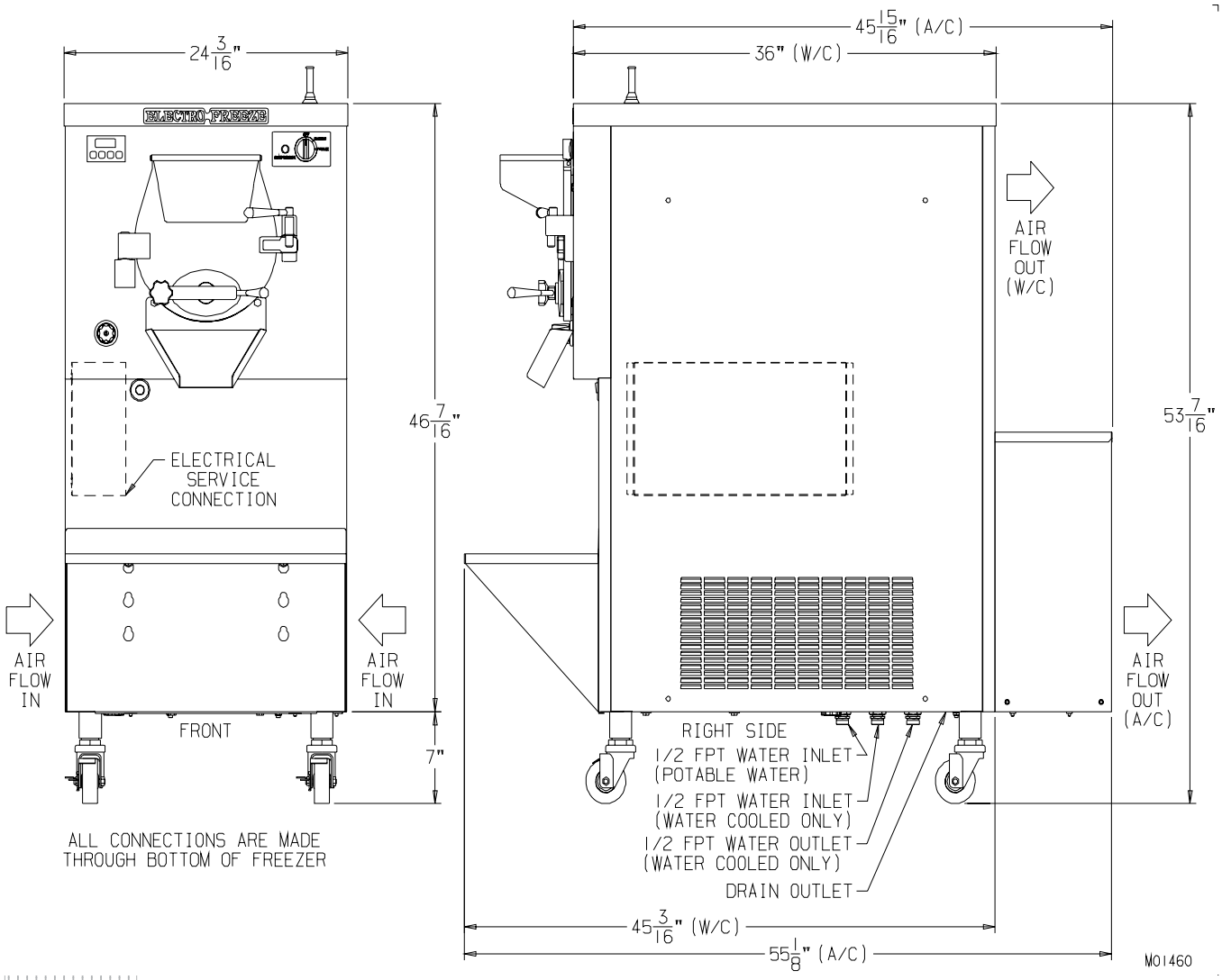

Figure 3-3 Dimensions B24

4 Part Names and Functions

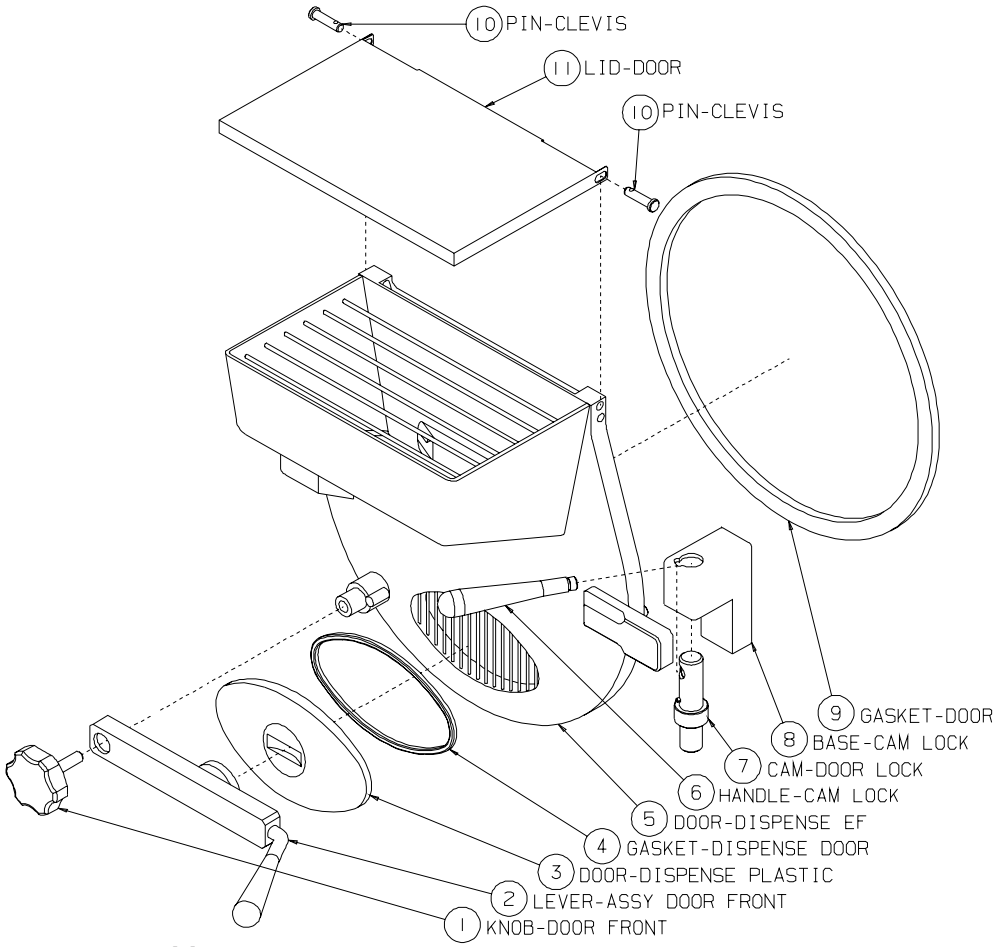

Figure 4-1 Door Assembly

1 KNOB - DOOR FRONT
Tightens lever to door.

2 LEVER - ASSY. DOOR FRONT
Lever for opening the dispense door.

3 DOOR - DISPENSE PLASTIC
Covers the opening in the door assembly to dispense product.

4 GASKET - DISPENSE DOOR
Seals the plastic dispense door to door assembly. **Must be lubricated.**

5 DOOR - DISPENSE EF
Encloses the freezing cylinder and provides an opening for product to be dispensed.

6 HANDLE - CAM LOCK
Handle for cam lock. Handle can be unscrewed so cam can be removed for cleaning.

7 CAM - DOOR LOCK
Locks door assembly in place.

8 BASE - CAM LOCK
Used to hold door lock cam.

9 GASKET - DOOR
Provides seal between door and freezer cylinder.

10 PIN - CLEVIS
Connects lid to door and allows lid to swing open.

11 LID - DOOR
Provides covering for mix inlet.

4 Part Names and Functions

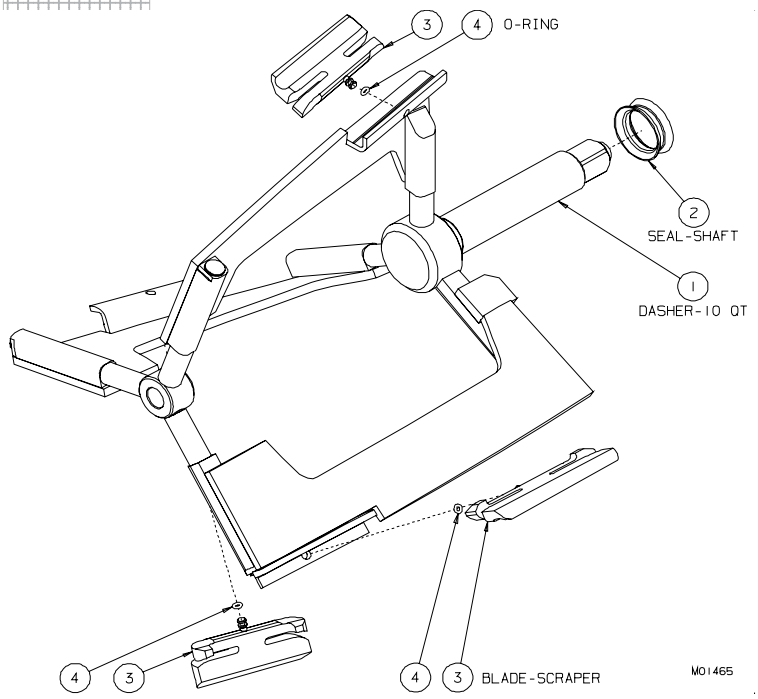

1 DASHER
Blends product during freezing.

2 SEAL-SHAFT
Seals the dasher to the cylinder wall. **Must be lubricated.**

3 BLADE-SCRAPER
Scrapes cylinder wall during freezing. Three blades are used on the B12 dasher. Six scraper blades are used on the B24 dasher.

4 O-RING - SCRAPER BLADE
Used to hold the scraper blade to the dasher.

Figure 4-2 B12 Dasher Assembly

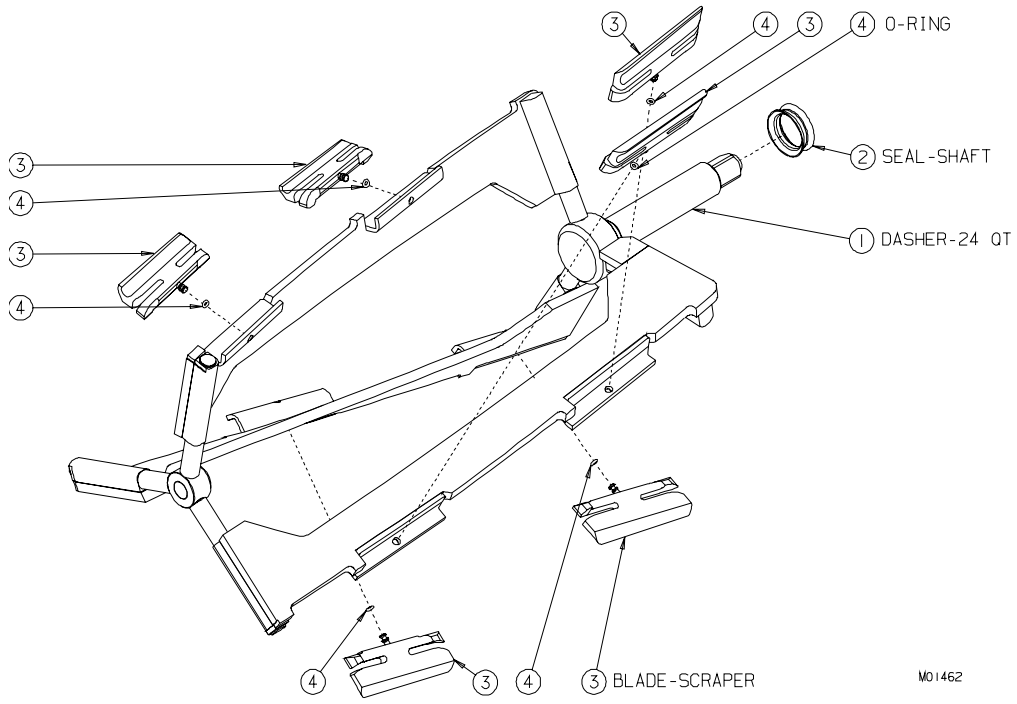

Figure 4-3 B24 Dasher Assembly

5 Operator Controls and Indicators

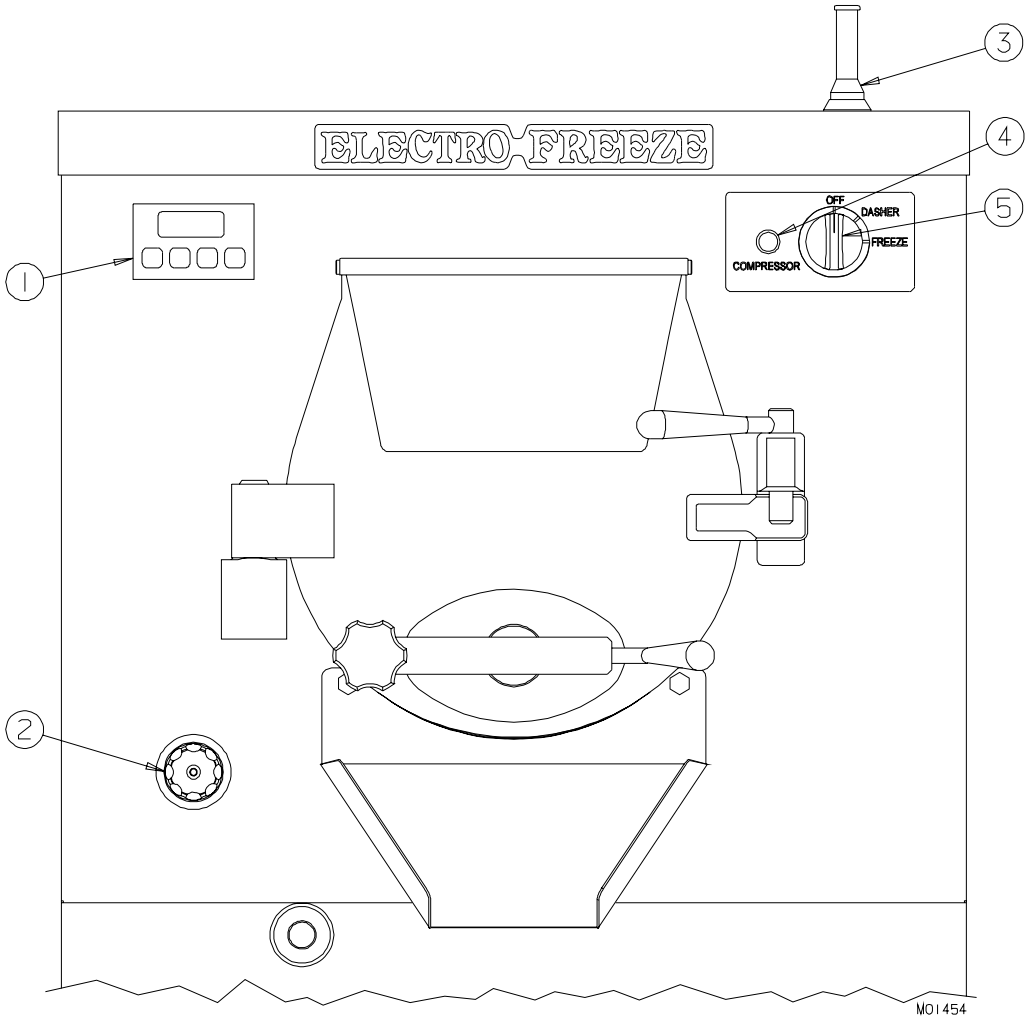

Figure 5-1

The following paragraphs describe the operator controls and indicators. Refer to figure 5-1 for location of these controls and indicators on the freezer.

CAUTION

Test operation of the head switch prior to placing the freezer in service. See Section 11, Routine Maintenance, Monthly.

5 Operator Controls and Indicators - continued

5.1 Digital Timer (1)

This timer is used for alerting the operator for a specific action such as adding flavors or the end of the cycle is near. End of cycle will produce an audible tone. Press stop to end alert signal. The arrow keys increase or decrease time. The start and stop/reset keys control timing. See Section 6 for detailed instructions.

5.2 Rinse/Fill Valve (2)

A quarter turn valve used to control water in rinsing or filling operations.

5.3 Rinse/Fill Hose (3)

Water hose used to rinse or fill freezer.

5.4 Compressor Light (4)

Indicates operation of the refrigeration system.

5.5 Selector Switch (5)

a. **"OFF"** — The dasher will not operate nor will the cylinder be refrigerated when the switch is in this position.

b. **"DASHER"** — This position will start the dasher motor. Use this position for cleaning, sanitizing, and dispensing product.

c. **"FREEZE"** — This position activates the refrigeration system. The compressor will continue to freeze the product until the torque switch turns off the refrigeration. The dasher will continue to run and refrigeration will cycle as needed.

NOTE: To save wear on the freezer, after the compressor light turns off , turn the switch to "DASHER" and immediately dispense product. Turn the selector switch "OFF" when the cylinder is empty.

NOTE: The dasher motor will not operate when the door is open.

6 Digital Timer

6.1 Digital Timer Keys

The four keys are marked START, STOP/RESET, arrow pointing UP and arrow pointing DOWN (see figure 9-1). These keys are used to operate and program the unit. The following is a listing of each of the keys and their functions:

1. START

This is a multifunction key:

a. Its primary function is to start the timer. It may start the timer either from the RESET or HOLD mode.

b. The second function for this key is in the SETUP mode. (See SETUP)

2. STOP/RESET

This is a multifunction key:

a. When the timer has counted down to 0:00, this is used to reset it for the next run. It places the unit in the RESET mode and reloads the display with the previous time selection.

b. If the Timer is still counting down, depressing the STOP/RESET key once will place it in the HOLD mode. If the Timer is in the HOLD mode, depressing the key once will place it in the RESET mode.

c. The key is also used in entering the SETUP mode. (See SETUP)

NOTE: by depressing the STOP/RESET key at power up, the timer will default to zeroes in the program.

d. The key is also used to change a preset value. If the timer is in the HOLD mode, depressing and holding the key down will allow the UP or DOWN keys to set the new value.

3. UP

This is a multifunction key:

a. In the RESET Mode, with the Clock Logic parameter set to 0, the key will adjust the time to be counted down as currently viewed in the display. Depressing the key once and releasing will allow the accurate setting of the least significant digit. Holding the key down will activate the automatic, rapid incrementing of the display.

b. In the RESET Mode, with the Clock Logic parameter set to 1, the key will select the next Preset Time. Each depression of the key will select the next higher preset number.

c. In the SETUP mode, depressing the UP key will cause the display to advance. Depressing the key once and releasing will allow the accurate setting of the least significant digit. Holding the key down will activate the automatic, rapid incrementing of the display.

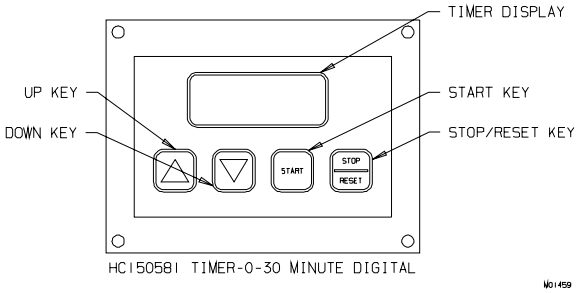

Figure 6-1 Timer

6.2 Digital Timer Setup

1. The SETUP mode is entered by depressing and holding the STOP/RESET key and then depressing the START key. While in this mode, the START key is used to step through the parameters. The following chart is a listing of the Code prompts that will appear in the display, when in the SETUP mode. The code will alternately flash with the selected value to indicate to the user the parameter that is currently viewed or set.

a. P1 thru P5 - The five Presets determine the duration of the available timer periods when Presets are used (CL = 1).

b. CL - The Clock Logic setting determines if the timer will be restricted to the preset times or if a unique time may be set by the operator.

c. AC - The Access Code is the number that must be matched to allow entry into the Programming mode. This number may be changed at any time, but a note should be kept of its value. If set to >0=, this function is eliminated.

2. To exit the SETUP mode, the RESET key is depressed. When exiting, the unit automatically enters a SAVE mode. This causes the parameters to be written into the EEPROM memory. This is a permanent (10 year minimum life) memory that does not require battery backup.

3. ACCESS CODE - In some cases, it may be desirable to restrict access to the SETUP mode. An Access Code system is incorporated. If the Access Code is set to >0000=, the function is eliminated and the system operates as previously described. The code is any number from 1 to 9999, as programmed into the system by the customer's authorized personnel. Once this code is entered, any attempt to enter the SETUP mode will cause 'CODE' to appear in the Timer display. The UP and DOWN keys are then used to enter the Access Code. Once the proper code has been selected, the user simply depresses the START key to gain entry into the SETUP parameters.

Code	Description	Setting Range	Factory Setting
P1	PreSet Time #1	0:00 to 99:59 Min:Sec	10 Minutes
P2	PreSet Time #2	0:00 to 99:59 Min:Sec	15 Minutes
P3	PreSet Time #3	0:00 to 99:59 Min:Sec	20 Minutes
P4	PreSet Time #4	0:00 to 99:59 Min:Sec	25 Minutes
P5	PreSet Time #5	0:00 to 99:59 Min:Sec	30 Minutes
CL	Clock Logic	0 = Use Direct Set 1 = Use Presets	0
AC	Access Code	0000 to 9999	>0000=

6.3 Digital Timer Operation

6.3.1 Manual Mode

The timer is factory set to the manual mode (CL=0) of operation. When the freezer is powered up, a preset time will be displayed in the window.

1. To change this time:
   a) Press ▲ or ▼ keys to scroll to desired time. Keeping the key depressed will increase speed of time change.
   b) Press “Start” and timer will count down.
   c) Press “Stop/Reset” twice and timer will reset to new setting.
2. To start timer:
   a) Press “Start”
3. During countdown
   a) To stop, press “Stop” and display will stop and flash “Hold”.
   b) To continue from current time, press start.
   c) To reset to original time, press “Reset” twice.
4. At the end of countdown:
   a) Display will read “Done” and the timer will make beep sound.
   b) Press “Stop” to end beep sound and reset timer.

6.3.2 Pre-set Time Mode

The timer can be operated in the preset time mode (CL=1) of operation.

1. To view preset time setting and change to preset time mode:

   a) Press “Stop/Reset” one second, hold and press “Start” once. This will display code P1 and flash between P1 and its current time setting. While continuing to hold “Stop/Reset” press “Start” again to advance to P2, P3, P4, P5, CL and AC.

   b) At CL the setting will read 00. Release “Stop/Reset” and press ▲ to change to “01”. This will activate preset time mode.

   c) Press “Stop/Reset” again to enter preset time mode. Now, the ▲and ▼ keys will scroll to 5 preset times. Select desired time and press “Start” to start countdown, “Stop” once to hold countdown, and “Stop” twice to reset timer.

2. To change preset times:

   a) Press “Stop/Reset” one second, hold and press “Start” once. This will display code P1 and flash between P1 and its current time setting.

   b) Release “Stop/Reset” and use the ▲ and ▼ keys to change time. Press “Stop/Reset” once to set new time and exit program.

   c) Repeat A & B for changing P2, P3, P4, and P5 settings.

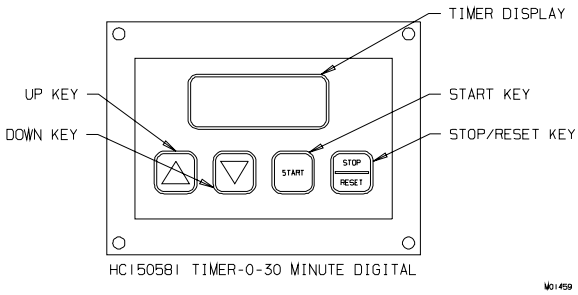

Figure 6-1 Timer

7 Disassembly and Cleaning

CAUTION

To avoid electrical shock or contact with moving parts, make sure all switches are in the "OFF" position and that the main power supply is disconnected.

It is important that the freezer be disassembled, washed, lubricated and sanitized before operation.

The cleaning and sanitizing instructions explained in this manual are required to maintain a clean, sanitary freezer. The freezer should be disassembled, cleaned, reassembled, lubricated and sanitized daily to ensure the best possible product quality and freezer operation.

Persons assembling, cleaning, or sanitizing the freezer must wash and sanitize hands and forearms with an approved sanitizer.

7.1 Cleaning Accessories

The following accessories shipped with the freezer are necessary for cleaning, sanitizing and disassembly/assembly.

1. BRUSH. 9/16-inch diameter with 36-inch handle, used for cleaning the drain tube.

2. BRUSH. 6-inch by 2-3/4-diameter with 9-inch handle, used for cleaning the cylinder and shelf.

3. BRUSH. 1-inch diameter with an overall length of 12 inches, used to clean the door, gratings, o-ring grooves, and all other parts.

4. TOOL - O-RING REMOVAL. Aids in removing O-rings.

5. BOTTLE, WASH. Used to sanitize the inlet and outlet chutes and the face of the door.

6. LUBRICANT-PETROL GEL. Approved lubricant for moving parts and O-rings. See assembly instructions for lubricating points.

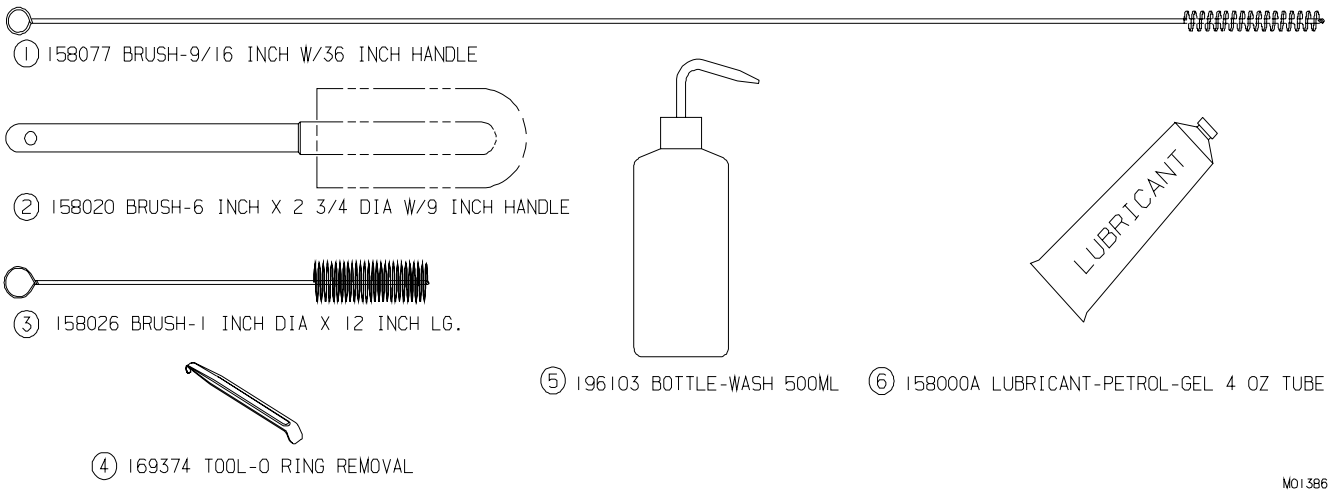

Figure 7-1

7.2 Disassembly Instructions

It is important that the freezer be disassembled, washed, lubricated and sanitized before operation. For maximum life on moving parts, disassemble and sanitize at the end of every day of operation. Disassemble freezer as follows:

CAUTION
To avoid electrical shock or contact with moving parts, make sure all switches are in the "OFF" position and that the main power supply is disconnected.

1. Remove product from the cylinder as outlined in section 10.1 Draining Product from the Cylinder.

2. Open the cam door lock (6-7, figure 7-3) and remove the dasher (figure 7-2) from the freezer by pulling straight out. Take the dasher to a three compartment sink.

3. Remove the shaft seal (2) and scraper blades (3) from the dasher. Remove the o-rings (4) from the scraper blades.

– continued

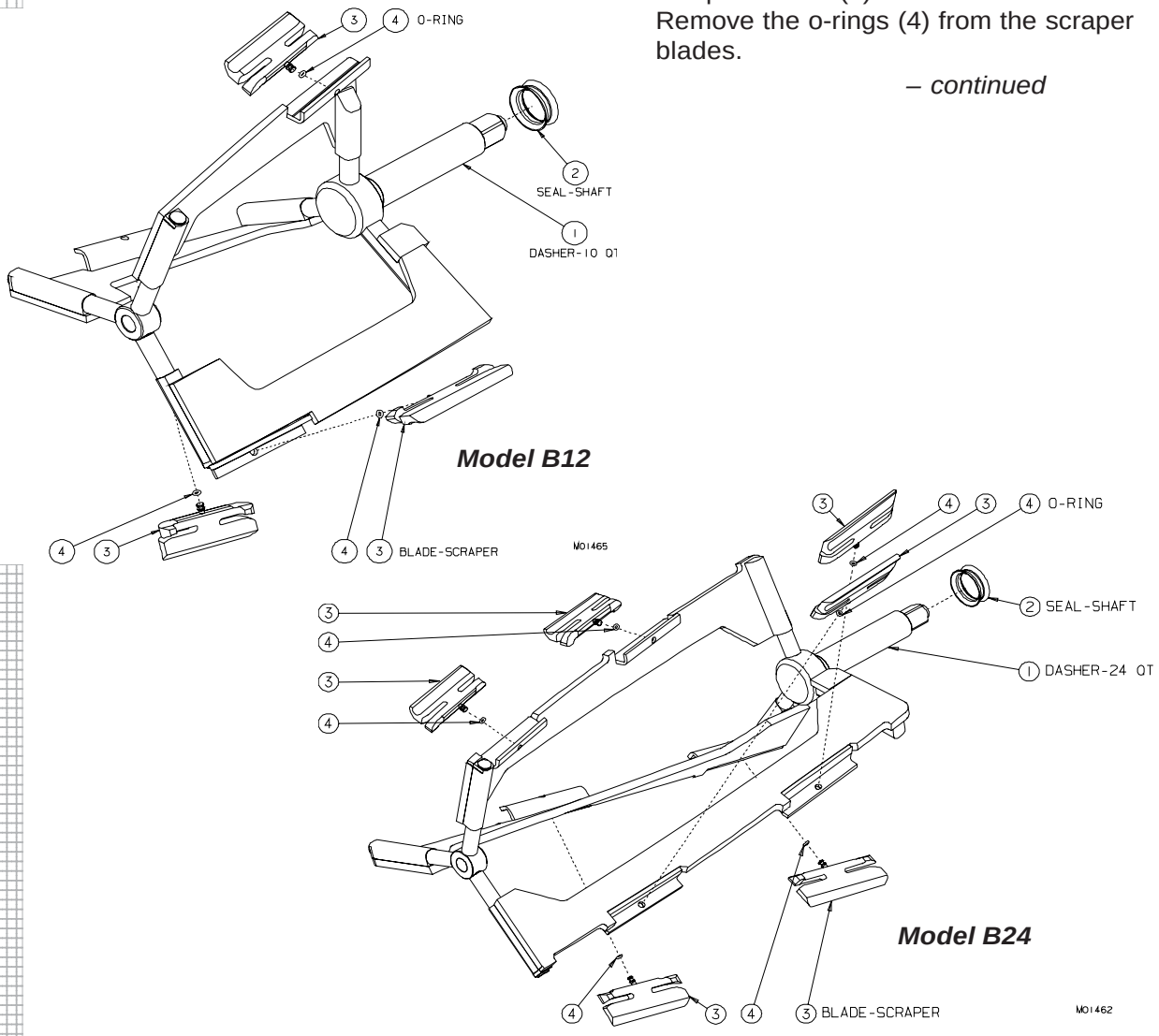

Figure 7-2 Dasher Assembly

7.2 Disassembly Instructions - continued

4. Lift the door (5, figure 7-3) off the hinge and take to sink.

5. Unscrew the door knob (1) and remove the lever (2) and platic dispense door (3). Remove the gasket (4) from the plastic dispense door.

6. Remove the lid (11), clevis pins (10) and door gasket (9) from the door assembly.

7. Remove cam lock (7) and handle (6) by unscrewing the handle and sliding cam down through the cam base.

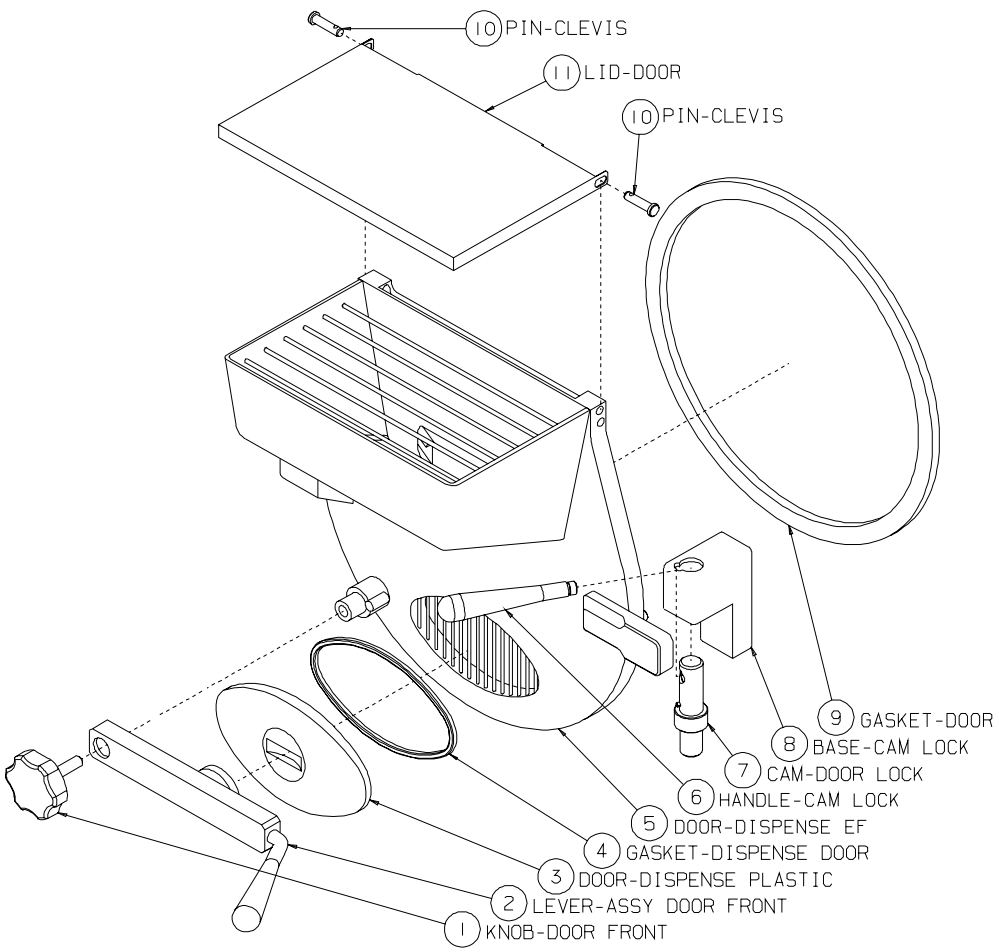

Figure 7-3 Door Assembly

7.3 Cleaning Instructions

The cleaning instructions explained in this section are procedures to remove bacteria and maintain a clean, sanitary freezer. The batch freezer must be disassembled, washed and sanitized according to the instructions in this manual before start-up to ensure the best possible cleanliness.

CAUTION
Electric shock hazard. Do not splash water on switches or allow water to flow onto electrical components inside the freezer.

CAUTION
To prevent bacteria growth, use only approved sanitizers to sanitize the machine. Failure to do so could create a health hazard.

NOTE: It is your responsibility to be aware of, and conform to, the requirements for meeting federal, state and local laws concerning the frequency of cleaning and sanitizing the freezer.

1. Wash and sanitize your hands.

2. Prepare a three-compartment sink for washing, rinsing, and sanitizing parts removed from the freezer, per applicable health codes. Also, prepare a clean surface to air-dry all parts.

⇨ ***Important:***
Do not use unapproved sanitizer or laundry bleach. These materials may contain high concentrations of chlorine and will chemically attack freezer components.

NOTE: Sanitizing solution must be mixed according to manufacturer's instructions to yield 100 ppm available chlorine solution (example: Stera Sheen Green Label). Use warm water (100 to 110°F or 38 to 43°C) to wash, rinse, and sanitize.

3. Wash all parts removed from the freezer thoroughly with a dish detergent solution. Clean the following parts with the appropriate supplied brush:

a. The door, gasket, door guard pins, lid, clevis pins, and gasket groove.

b. The dispensing door, gasket groove, gasket, spacer, spring, screw, lever and knob.

c. The door cam and handle.

⇨ ***Important:***
Do not leave parts in sanitizer for more than 15 minutes.

4. After all parts are washed and rinsed place them in the sanitizing solution. For proper sanitizing, the parts must remain fully immersed in the sanitizing solution for 5 minutes. Allow parts to air-dry after sanitizing.

5. Using a warm dish detergent solution thoroughly brush the inside of the cylinder including the back wall and dispensing chute. Rinse with sanitizing solution.

6. Wash the shelf assembly with a warm dish detergent solution and rinse with clear water.

7. Wash the outside of the freezer with a warm dish detergent solution. Rinse with clear water.

Replace worn brushes. Use only Electro Freeze original or authorized replacement parts. See Alphabetized Parts List in Part II of this Manual to order new brushes.

8 Assembly

Correct assembly is essential to prevent leakage of the product and damage to the freezer. To assemble the freezer you will need an approved lubricant, such as Petrol-Gel. Make sure all parts of the assemblies have been washed and sanitized before assembling.

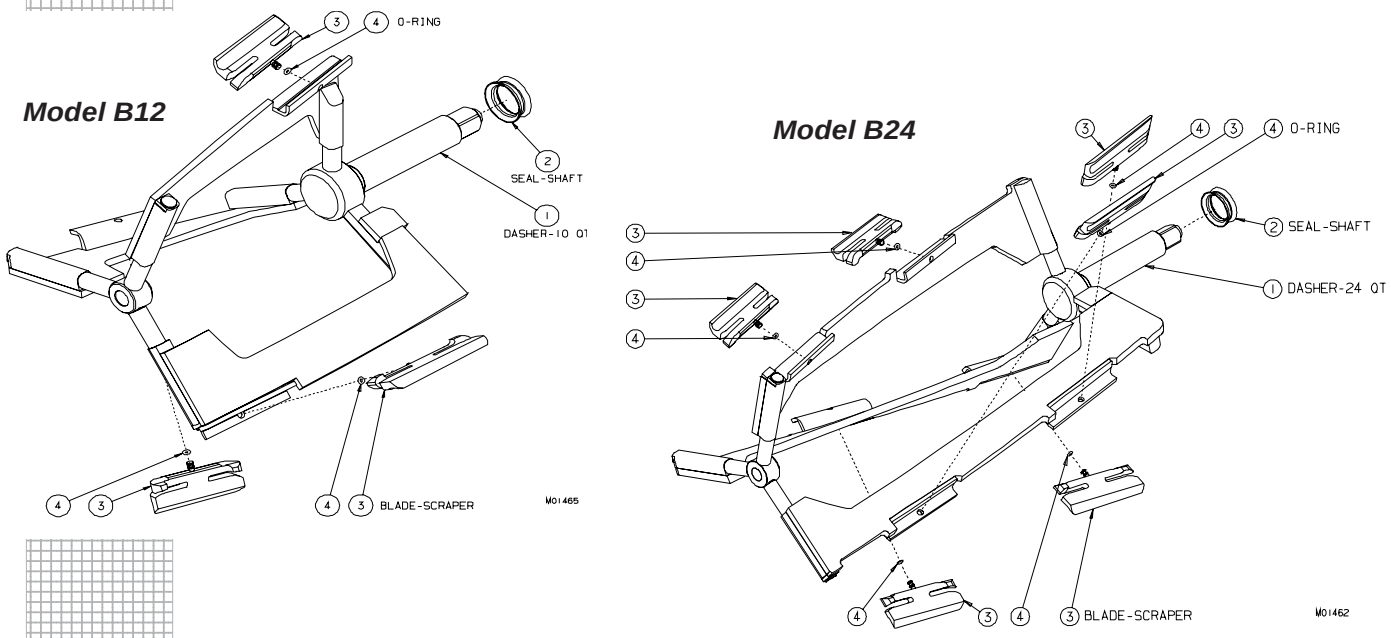

Figure 8-1 Dasher Assembly

CAUTION
To avoid electrical shock or contact with moving parts, make sure all switches are in the "OFF" position and that the main power supply is disconnected.

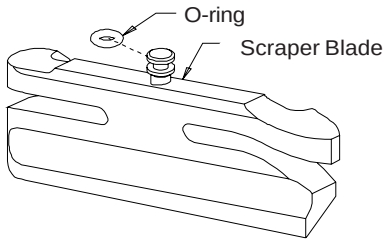

Figure 8-2 Scraper Blade

1. Wash and sanitize your hands and forearms.

2. See Figures 8-1 and 8-2. Install an o-ring (4) in the groove on each scraper blade pin (3) this will hold the blade in place. Place a small amount of lubricate on the o-ring. Assemble the scraper blades (3) on the dasher by placing the pin through the hole on the dasher (1). The scraper blade is designed to be installed only one way. Repeat until all scraper blades are installed on the dasher. (Six on model B24 and three on model B12.)

3. Lubricate the shaft seal (2) and place on the end of the dasher (1).

4. Insert dasher assembly into freezer cylinder. Press each scraper blade down as it contacts the cylinder. Rotate and push the dasher until it engages the drive shaft.

– continued

8 Assembly - continued

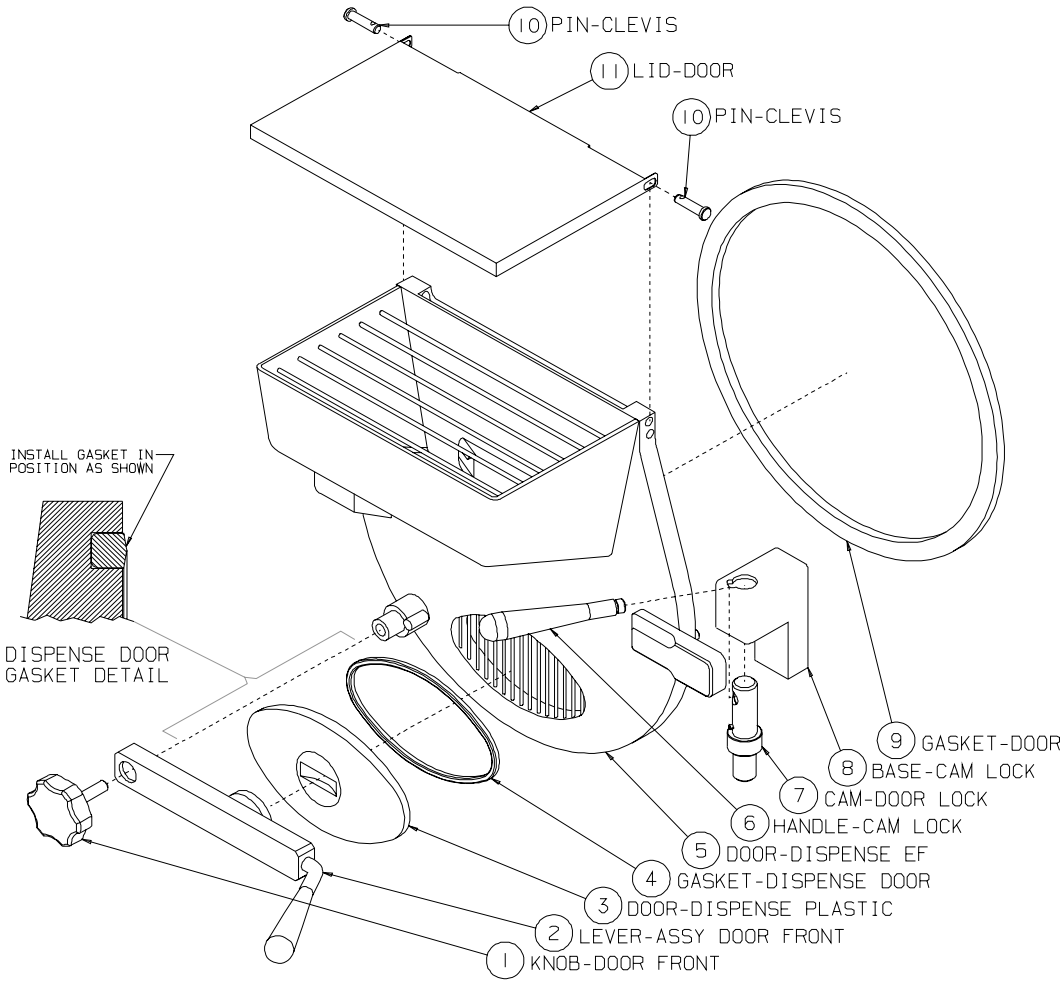

Figure 8-3 Door Assembly

5. See Figure 8-3. Lightly lubricate the dispense gasket (4) and place in the groove in the plastic dispense door (3).

7. Insert knob (1) through door lever (2) and screw one revolution into door (5). Slide the plastic dispense door (3) in position over the lever (2) and tighten the knob (1).

8. Install door lid (11) on door (5) and hold in place with clevis pins (10).

9. Lightly lubricate the gasket groove on the back of the door (5).

10. Insert the door gasket (9) in the groove and lubricate face of gasket.

10. Lubricate the door lock cam (7) and insert it up through the cam lock base (8). Screw the cam lock handle (6) into the cam lock (7).

11. Lubricate freezer door hinge pin, slide the door assembly on the hinge, close, and lock in place with the cam handle.

NOTE: If the door does not close easily, recheck engagement of beater shaft.

9 Start-up Instructions

9.1 Sanitizing

The washing and sanitizing instructions explained in this manual are important procedures to remove bacteria and maintain a clean, sanitary freezer. The batch freezer must be disassembled and washed according to the instructions in the manual before sanitizing to ensure the best possible cleanliness.

CAUTION

To prevent bacteria growth, use only approved sanitizers to sanitize the machine. Sanitizing must be done just prior to starting the machine. Failure to do so could create a health hazard.

⇨ ***Important:***

Do not use unapproved sanitizers or laundry bleach. These materials may contain high concentrations of chlorine and will chemically attack freezer components.

NOTE: It is your responsibility to be aware of and conform to the requirements for meeting federal, state and local laws concerning the frequency of cleaning and sanitizing the freezer.

Within one hour prior to operation, sanitize your machine and utensils. Metal and plastic cans will require sanitizing. Keep cleaned containers covered in the hardening cabinet to prevent any melt down of ice cream.

1. Wash and sanitize your hands and forearms.

2. Prepare 2 gallons (7.6 liters) of sanitizing solution in a container. The sanitizing solution must be mixed according to manufacturer's instructions to yield 100 PPM (parts per million) available chlorine solution (example: Stera-Sheen Green Label). Use warm water (100-110°F or 37-43°C) to wash, rinse, and sanitize. Fill the wash bottle in the accessories with the sanitizing solution.

⇨ ***Important:***

Never let the sanitizer remain in the freezer for more than 15 minutes.

⇨ ***Important:***

Do not insert any tools or objects into the chute while the freezer is running.

⇨ ***Important:***

Do not use the "FREEZE" position on the selector switch with water or sanitizer in the cylinder. The freezer will be damaged.

3. Using the appropriate brush, soaked in sanitizer, wash the door lid, inlet and dispensing chutes with the sanitizing solution. Sanitize the utensils that will come into contact with product.

4. Reconnect the main power supply.

5. Pour the sanitizing solution into the freezer inlet chute. Turn the selector switch to the "DASHER" position allow the dasher to run for 20-30 seconds.

6. Turn the selector switch to the "OFF" position and allow to soak for four minutes. During this time, use the wash bottle with sanitizer and spray down the dispense door, chute, and all surfaces that will be in contact with product.

NOTE: Operate dasher ONLY for the time necessary to sanitize. This will avoid unnecessary wear of scraper blades.

7. Place an empty container under the door and open the dispensing door to drain the sanitizing solution.

8. The machine is now sanitized and ready for mix. DO NOT touch any sanitized parts.

9.2 Product Preparation

The batch freezer is a versatile machine designed for several types of products. Some of the products on this list are Italian ice, water ice, and cream ice. Each product will have its own recipe and some popular formulas are available from you local Electro Freeze distributor. With experience, personalized recipes to fit your customers demands can be developed. Finished product torque settings are preset at the factory for ice cream. Contact your service representative for torque adjustments.

9.3 Freezing Product

1. Pour desired amount of mix into the cylinder using the chute in the dispense door. See the following chart for minimum and maximum quantities.

	Gallons of Mix Per Batch	
Model	***Minimum***	***Maximum***
B12	1 Gallon (3.5 liters)	2 Gallons (7 liters)
B24	2.5 Gallons (9.5 liters)	4 Gallons (16 liters)

2. Turn the selector switch to the “FREEZE” position.

NOTE: The compressor light will activate to indicate freezing.

3. Freezing time will vary for different flavors. Set the times according to your recipe and press start. When product has reached the desired consistency, the torque system will automatically shut off the refrigeration system. The dasher will continue to operate.

NOTE: To save wear on components **do not allow dasher to run continuously** as the refrigeration will restart.

4. Place a clean sanitized container on the shelf. Turn the selector switch to “DASHER” and slowly open the dispense door and allow the dasher to dispense the product.

5. When cylinder is empty turn the selector switch to the “OFF” position.

NOTE: This unit is not designed for product storage. A single batch of product should not remain in the cylinder for longer than one hour.

9.4 Overrun

As mix is frozen in the freezing cylinder, air is incorporated into the mix to increase its volume, as well as enhance the taste and texture of the finished product. The increase in volume is called *overrun.* Fifty percent overrun means a volume increase of 50% — 10 gallons of liquid mix has become 15 gallons of finished product.

Controlled overrun is important to maintain consistency in product quality. Too much overrun (air) results in a light, fluffy product lacking the cold, refreshing appeal of a quality product. Too little overrun results in a wet, heavy product.

To correctly measure the overrun, perform the following steps:

a. Place an empty pint container on the scale* and adjust your scale to zero.

b. Remove container from scale and fill with liquid product to the top. Weigh container and record.

c. Replace liquid product with frozen product, being sure to leave no voids or air spaces in the container.

d. Strike off the excess product so it is even with the top of the container and measure the weight.

e. Use the following formula to figure overrun percentage:

"Weight of liquid mix minus weight of frozen product/divided by the frozen weight times 100."

Example:

Weight of one pint of liquid mix	**=18 oz.**
Weight of one pint frozen product	**=12 oz.**
Difference	**= 6 oz.**
6.0 oz. divided by 12 oz.	**= .5**

.5 x 100 = 50% overrun

* Your Electro Freeze Distributor can provide a scale and container (P/N HC158049) that is graduated in overrun percentage.

Overrun will vary depending upon the type and amount of mix you use.

10 Closing Procedures

10.1 Draining Product from Freezer

Note: It is your responsibility to be aware of and conform to the requirements for meeting local, state, and federal laws concerning the frequency of cleaning and sanitizing the freezer.

1. After product has been removed from the freezer, use the rinse hose to fill the cylinder with 2 gallons (7.6 liters) of cold water. Turn the selector switch to the “DASHER” position for 15 seconds.

2. Turn the selector switch “OFF” and slowly open the dispense door and drain the water from the cylinder.

3. Repeat if necessary. Do not touch food zone parts.

4. Once the dasher and cylinder are completely rinsed, the next batch can be prepared for freezing.

⇨ ***Important:***

Do not use hot water. Damage to the freezer could occur.

⇨ ***Important:***

Do not use the “FREEZE” position on the selector switch with water in the cylinder. The freezer will be damaged.

5. Refer to Section 7, Disassembly and Cleaning.

11 Routine Maintenance

Electro Freeze recommends the following schedule to help maintain your freezer in like-new operating condition. Take the time to learn and perform these routine procedures and receive in return many years of valuable service from your freezer. *Protect your investment!*

This safety symbol identifies procedures that could cause personal injury. If you are uncertain about a procedure and its safety, or have any questions on the safety precautions, contact your local Electro Freeze Distributor or H. C. Duke & Son, Inc.

DAILY

1. Disassemble, wash, rinse, sanitize, air-dry, reassemble and sanitize all parts which come into contact with the mix.

CAUTION
To prevent bacteria growth, remove all O-rings when cleaning. Failure to do so could create a health hazard.

2. Clean the cylinder and drain tube with the appropriate brushes.

3. Lubricate parts as detailed in manual.

4. Inspect the dasher and blades. for wear.

4. Wipe all exterior surfaces of the freezer to remove any splattered mix.

5. Check overrun and temperature of the product.

11 Routine Maintenance - continued

MONTHLY

1. Test Door Switch.

The door switch feature is designed to prevent the dasher from being accidentally activated. It is essential that the proper operation of this switch be verified on a routine basis. Use the following instructions to test for proper operation:

1. Be sure all switches are in the “OFF” position.

2. Disconnect the main power supply.

3. Open the dispense door and remove dasher assembly.

4. Connect the main power supply.

5. Turn the selector switch to the “DASHER” position.

CAUTION

Moving parts. DO NOT place hands in the freezing cylinder. Severe personal injury could result.

6. With the door open, look inside the freezing cylinder toward the rear, the drive shaft coupling should **NOT** be turning. Turn the selector switch “OFF” position and disconnect the main power supply.

7. If the drive shaft coupling is turning, or you are unable to determine whether or not the shaft is turning, turn the selector switch to the “OFF” position, disconnect the main power supply and contact your Electro Freeze distributor for service. **DO NOT** place the freezer in service until the problem has been corrected.

2. Water Condenser.

Check the outlet water temperature of water-cooled condensers at the floor drain out. Outlet water temperatures should be about 95°F with a 70° water inlet temperature.

11 Routine Maintenance - continued

ANNUALLY

CAUTION

To avoid electrical shock or contact with moving parts, make sure all switches are in the "OFF" position and that the main power supply is disconnected.

1. Have drive belt checked by your Electro Freeze Distributor.

2. Have the inside of the freezer cleaned, including base, side panels, condenser, etc., by your Electro Freeze Distributor.

3. Have water-cooled condenser checked and flushed clean by your Electro Freeze Distributor.

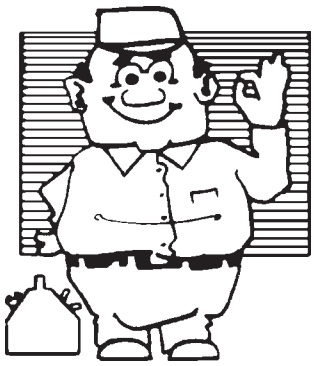

11 Routine Maintenance - continued

WINTER STORAGE

To protect the unit during seasonal shutdown, it is important to store the freezer properly. Use the following procedures:

1. Disconnect all power to the freezer.

2. Disassemble and wash all parts that come into contact with the mix using a warm, mild detergent solution. Rinse in clear water and air-dry all parts thoroughly. Clean drain tube and all exterior panels.

3. Store the loose parts, such as the door assembly and dasher assembly, in a safe dry place.

4. Do not lay heavy objects on the plastic or rubber parts.

5. Cover the freezer and all loose parts to protect them from dust or other elements that could contaminate them while in storage. Place the freezer in a dry location.

⇨ ***Important:***

The water valve must be opened in order to blow out the condenser. Failure to purge the freezer of water can result in severe damage to the refrigeration system. Call your Electro Freeze Distributor for service.

6. On water-cooled freezers, disconnect the water supply. Use compressed air to blow out all remaining water in the condenser.

USE ONLY ORIGINAL OR AUTHORIZED REPLACEMENT PARTS WITH THIS FREEZER.

If you have any questions on items that are not included in this schedule or problems that require service assistance, please call your local distributor or H.C. Duke & Son, Inc., *Electro Freeze*, Service Department for factory service assistance.

Phone: (309) 755-4553 or (800) 755-4545

FAX: (309) 755-9858

E-mail: service@hcduke.com.

12 Troubleshooting Tables

THIS SAFETY ALERT SYMBOL IDENTIFIES IMPORTANT PERSONAL SAFETY MESSAGES IN THIS MANUAL. WHEN YOU SEE THIS SYMBOL, BE ALERT TO THE POSSIBILITY OF PERSONAL INJURY. DO NOT ATTEMPT TO CONTINUE UNTIL THE SAFETY PRECAUTIONS ARE THOROUGHLY UNDERSTOOD.

CAUTION

All maintenance adjustments must be done by an Electro Freeze Distributor or authorized service technician.

CAUTION

To avoid electrical shock or contact with moving parts, make sure all switches are in the "OFF" position and that the main power supply is disconnected. Some freezers have more than one disconnect switch.

Important:

Some refrigerants are hazardous to the Earth's atmosphere. To protect our environment, use a refrigerant recovery/recycling unit when removing refrigerant from the system.

12 Troubleshooting Tables - continued

PROBLEM	PROBABLE CAUSE	REMEDY
Unit does not operate.	1. Freezer disconnected from power supply.	1. Connect power to the freezer.
	2. Door open.	2. Close and latch door.
	3. Fuse or breaker blown at main disconnect.	3. Make sure your freezer is connected to a separate circuit independent from any other electrical equipment. Have technician check fuse or breaker size and check for low voltage; if not within 5% of nameplate rating call power company.
	4. Component failure.	4. Contact your Electro Freeze Distributor for service.
	5. Faulty switch.	5. Contact your Electro Freeze Distributor for service.
	6. Disconnected or broken wire in electrical circuit.	6. Contact your Electro Freeze Distributor for service.
Compressor does not operate or operates improperly.	1. Inadequate water supply.	1. Check water supply for 2-1/2 gallons/minute flow rate and 80°F (26°C) or less temperature.
	2. Trouble in compressor condensing circuit.	2. Contact your Electro Freeze Distributor for service.
	2. Faulty start capacitor, run capacitor or relay. (Single phase only)	2. Contact your Electro Freeze Distributor for service.
	3. Faulty contactor.	3. Contact your Electro Freeze Distributor for service.
	4. Disconnected or broken wire in switch or capacitor relay box.	4. Contact your Electro Freeze Distributor for service.
	5. Compressor tripped on internal protector.	5. Allow to cool up to 3 hours.
	6. Freezer tripped out on high or low pressure cutout.	6. Contact your Electro Freeze Distributor for service.

12 Troubleshooting Tables - continued

PROBLEM	PROBABLE CAUSE	REMEDY
Compressor will not start – hums intermittently (cycling on overload)	1. Improperly wired.	1. Contact your Electro Freeze Distributor for service.
	2. Low line voltage.	2. Ask power company to increase voltage to not less than 5% below data plate rating or install transformer. Check for inadequate wire size.
	3. Faulty contactor.	3. Contact your Electro Freeze Distributor for service.
	4. Disconnected or broken wire in switch or capacitor relay box.	4. Contact your Electro Freeze Distributor for service.
Unit operates long or continuously.	1. Water condenser partial restriction.	1. Check hose for kinking or restriction, if not contact your Electro Freeze Distributor for service.
	2. Shortage of refrigerant	2. Contact your Electro Freeze Distributor for service.
	3. Moisture in system.	3. Contact your Electro Freeze Distributor for service.
	4. Compressor failing.	4. Contact your Electro Freeze Distributor for service.
Dasher motor does not operate.	1. Door assembly is not installed or closed properly.	1. Install door assembly.
	2. Magnetic door switch defective.	2. Contact your Electro Freeze Distributor for service.
	3. Loose connection in control circuit.	3. Contact your Electro Freeze Distributor for service.
	4. Open starter coil or overload relay..	4. Contact your Electro Freeze Distributor for service.
	5. Faulty capacitor assembly. (Single phase only.)	5. Contact your Electro Freeze Distributor for service.
	6. Faulty dasher motor or start switch	6. Contact your Electro Freeze Distributor for service.
	7. Motor tripped out on overload.	7. Wait 5 minutes for auto reset to work.

ELECTRO FREEZE®

REPLACEMENT PARTS MANUAL with ILLUSTRATIONS

QUALITY PARTS
PROTECT
YOUR
EQUIPMENT

Batch Freezer
Models
B12 and B24

184891-01 10/05

KEEP YOUR FREEZER IN EXCELLENT CONDITION. ALWAYS CONTACT YOUR ELECTRO FREEZE DISTRIBUTOR FOR REPLACEMENT PARTS.

H. C. Duke & Son, Inc. P/N 184890-01 October 2005 Printed in U.S.A.

Replacement Parts Orders

You must have the serial number of your freezer when ordering parts — parts may differ with a particular serial number of the same model.

Parts are listed using terminology that best fits the function of the part. The illustrations in this section will help you to find the correct part number and description.

Place your parts order through your local authorized Electro Freeze Distributor.

Name: _____

Address: _____

_____

Phone: _____

If you require any further assistance, contact H. C. Duke & Son, Inc. *Electro Freeze* as follows:

Phone: (309) 755-4553
(800) 755-4545

FAX: (309) 755-9858

E-mail: service@hcduke.com

Table of Contents

PART II

ILLUSTRATIONS

Figure 1	Door Assembly	1
Figure 2	B12 Dasher Assembly	2
Figure 3	B24 Dasher Assembly	3
Figure 4	B12 Panel View	4
Figure 5	B24 Panel View	6
Figure 6	B12 Rear View	8
Figure 7	B24 Rear View	10
Figure 8	Drive Assembly	12
Figure 9	Torque Switch Assembly	14
Figure 10	Electric Box	15

OTHER LISTS and INFORMATION

Accessories 16

Alphabetized Parts List 17

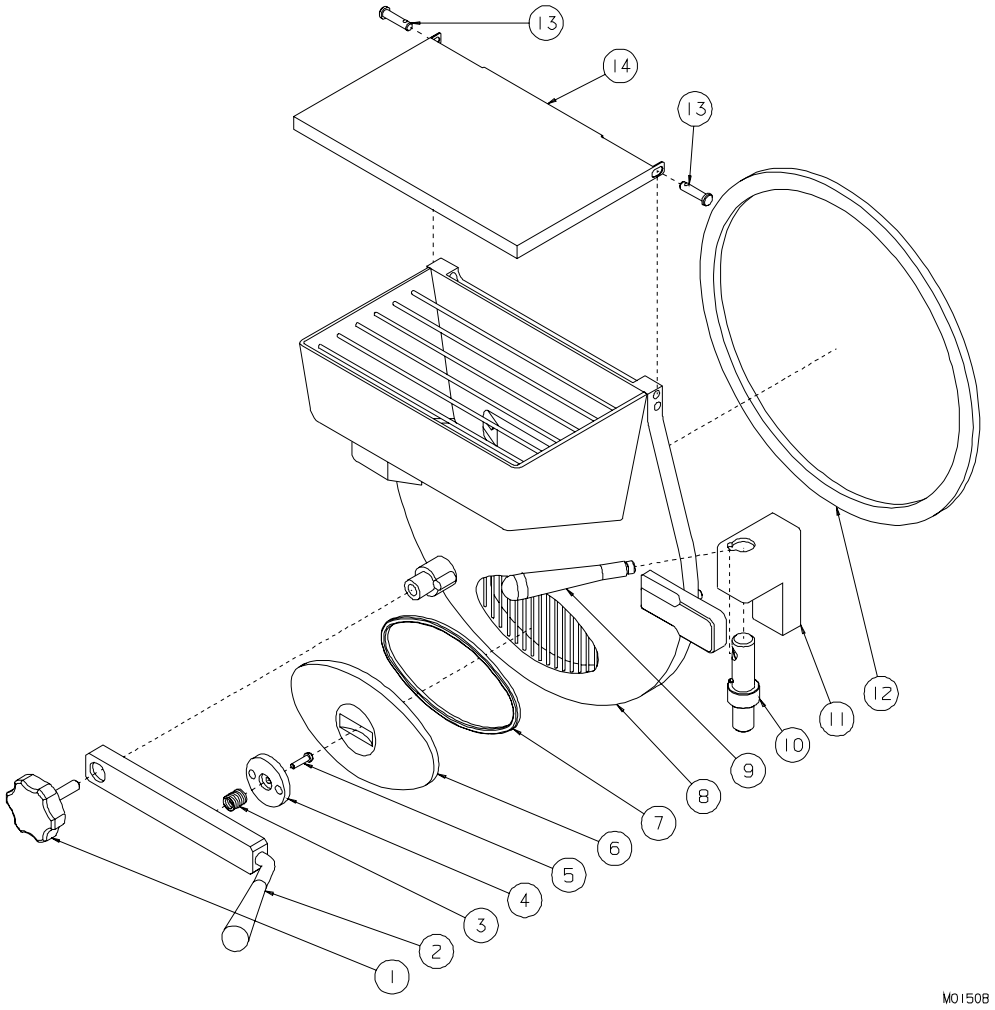

Figure 1 Door Assembly

Item	Part No.	Description
*	HC119828	Door-Assy. Complete
1	HC120040	Knob-Door Front
2	IC155185140	Lever-Door Front
3	IC178100060	Spring-Compression SST
4	IC107170900	Spacer-Door Front
5	IC511530420	Screw-FHMS M4 x 20 SST
6	IC118125050	Door-Dispense plastic
7	IC158200710	Gasket-Dispense Door
8	IC118130800	Door-Dispense EF
9	HC140209	Handle-Cam Lock
10	HC119455	Cam-Assy. Door Lock
11	HC140208	Base-Cam Lock
12	IC158200090	Gasket-Door
13	HC160353	Pin-Clevis
14	HC140198	Lid-Door

*Includes items 1 through 8 and 12 through 14

Not Shown

HC119825 ..... Kit-Dispense Door Switch Batch

Use only original or authorized replacement parts with this freezer.

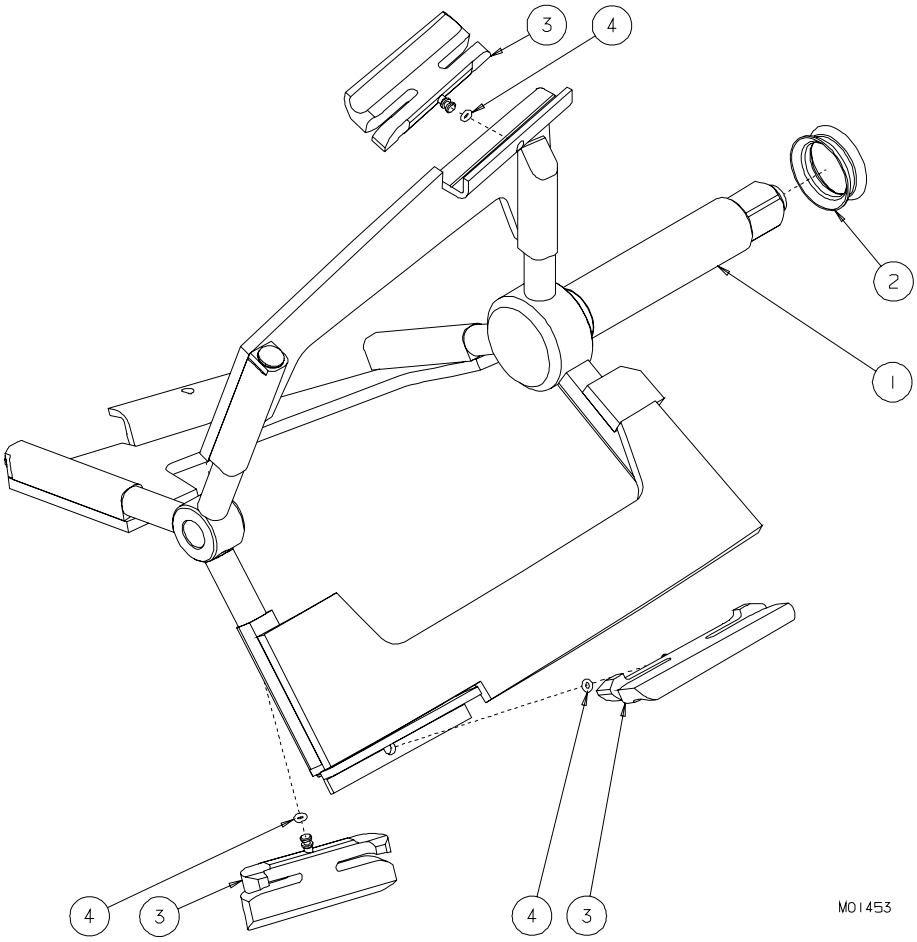

Figure 2 B12 Dasher Assembly

Item	Part No.	Description
1	IC142061040	Dasher-12 qt. B12
2	IC177120280	Beater Seal Shaft Silicone
3	IC141116030	Blade-Scraper
4	HC160646	O-ring (Scraper Blade)

Use only original or authorized replacement parts with this freezer.

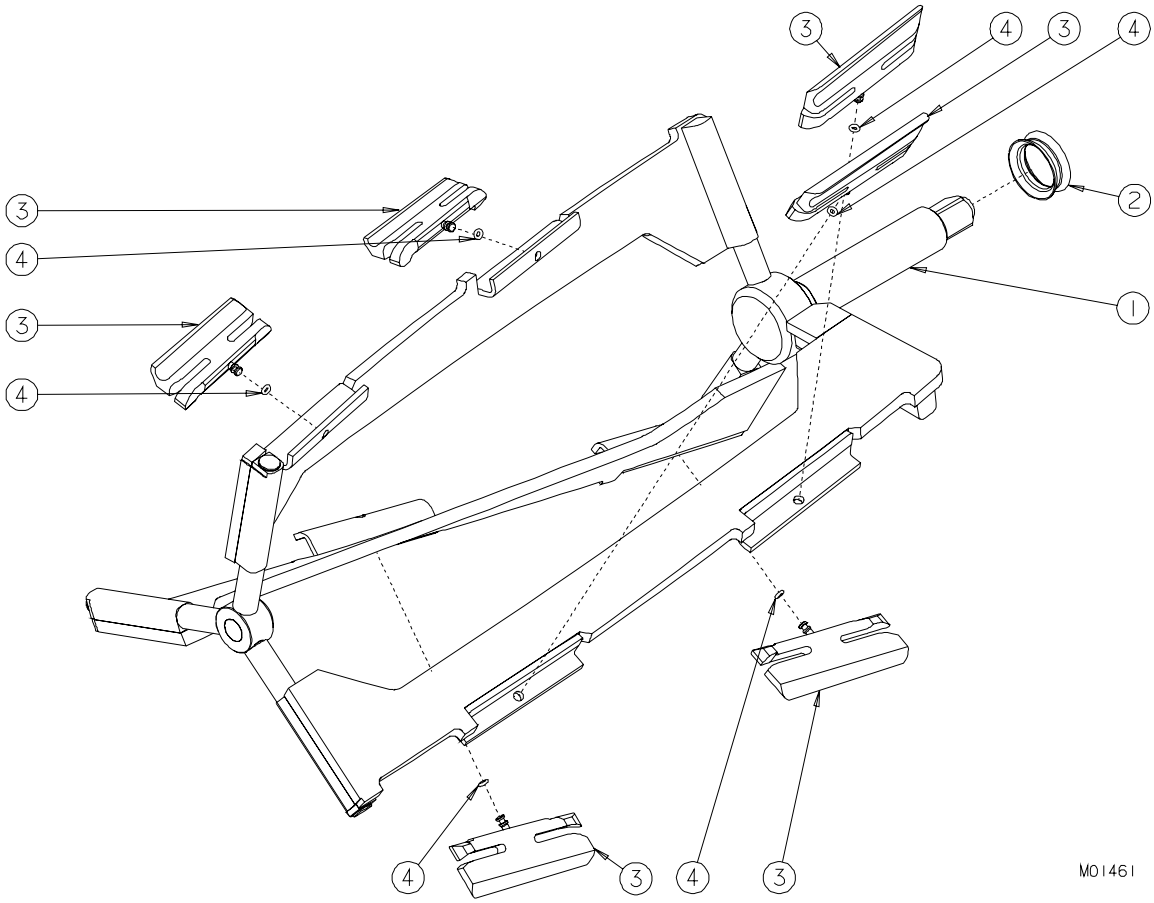

Figure 3 B24 Dasher Assembly

Item	Part No.	Description
1	IC142061030	Dasher-24 qt. B24
2	IC177120280	Beater Seal Shaft Silicone
3	IC141116030	Blade-Scraper
4	HC160646	O-ring (Scraper Blade)

Figure 4 B12 Panel View (Sheet 1 of 2)

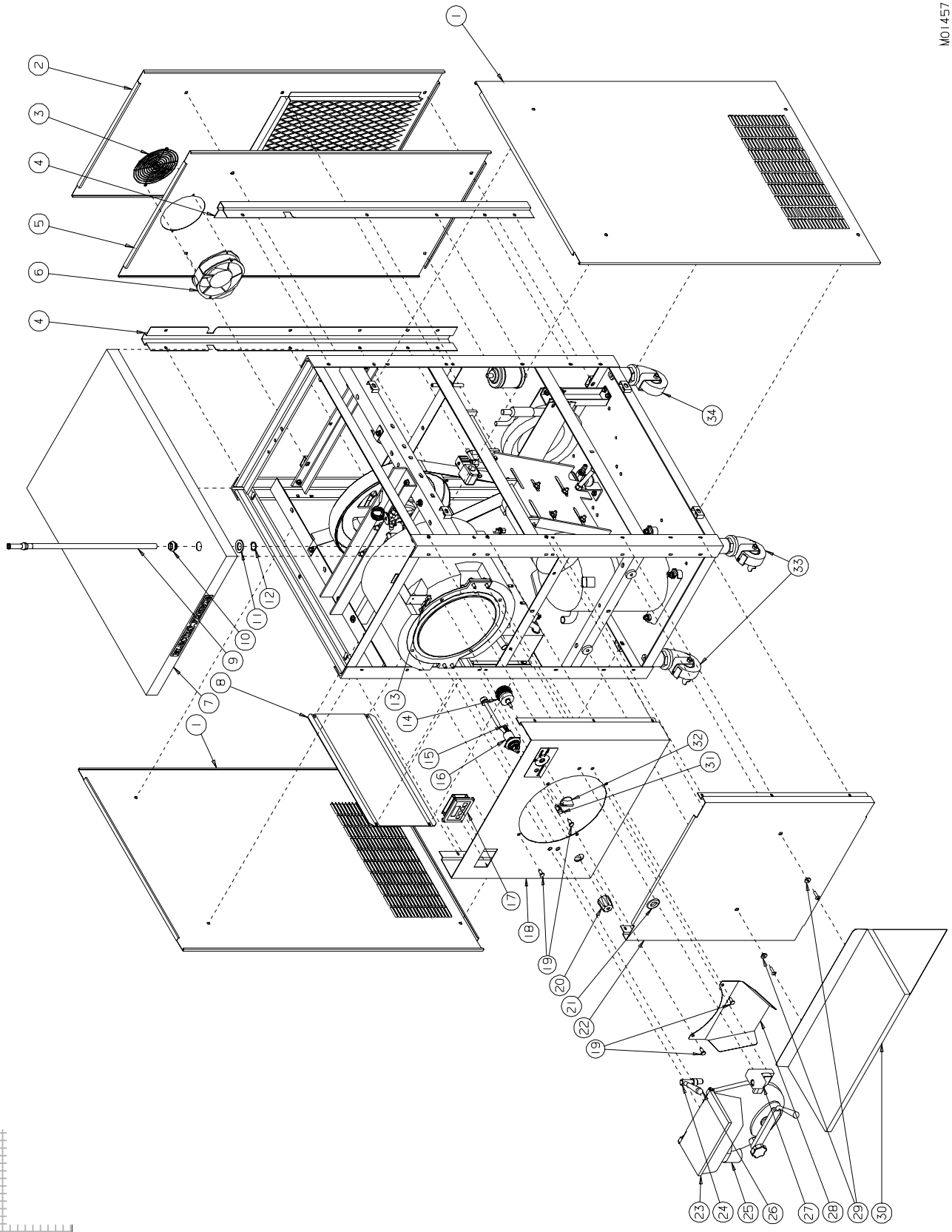

Use only original or authorized replacement parts with this freezer.

Figure 4 B12 Panel View (Sheet 2 of 2)

Item	Part No.	Description
1	HC140213	Panel-Side
2	HC119604	Panel-Assy. Rear (Air Cooled)
3	HC151009	Guard-Finger (Water Cooled)
4	HC140218	Channel-Rear Corner
5	HC140342	Panel-Rear W/C (Water Cooled)
6	HC151000	Fan-Axial 230v 212 CFM 35w 50/60 (Water Cooled)
7	HC119616	Panel-Assy. Top
8	HC140224	Cover-Electric Box
9	HC119469	Hose-Assy. Braided (with nozzle)
10	HC140347	Guide-Nozzle
11	HC160182	Washer-Flat 24mm Nylon
12	HC160430	Ring-Retaining 24mm External
13	HC119825	Kit-Dispense Door Switch Batch
14	HC150515	Switch-Rotary 2P (Selector)
15	HC155618	Adapter-3/8 Hose x 1/4 MPT BR
16	HC155489	Valve-1/4 Turn Faucet
16A	HC160755	Hose-Flex 3/8 Comp x 1/2 IPS
17	HC150581	Timer-0-30 Minute Digital
18	HC119606	Panel-Assy. Upper Front
19	HC140290	Screw-HXHC M8 x 20mm Rounded
20	HC162631	Knob-Fluted Metal Faucet
21	HC159063	Grommet-1-5/8 OD x 3/4 ID x 1-1/4 GRV.
22	HC140341	Panel-Lower Front
23	HC119828	Door-Assy. Complete (See Figure 1)
24	HC119455	Cam-Assy. Door Lock
25	IC164100230	Door Hinge
26	HC140209	Handle-Cam Lock
27	HC140208	Base-Cam Lock
28	HC140236	Chute-Mix Dispense
29	HC140354	Spacer-Shelf Mounting
29A	HC159219	Screw-TRPM 1/4-20 x 1 SST
30	HC119656	Shelf-Assy. Batch
31	HC150550	Light-Indicator 28v Amber
32	HC162637	Knob-Selector Switch Black
33	HC162105	Caster-1-1/4 ST PT w/Brake
33A	HC150736	Nut-Lock Conduit 1-1/4
34	HC162106	Caster-1-1/4 ST PT w/o Brake
34A	HC150736	Nut-Lock Conduit 1-1/4

Hardware for Panels		
Panel	**Screw**	**Nut-Speed**
Channel	HC160076	HC159133
Front-Lower	HC160076	HC159133
Front-Upper	HC160076	HC160304
Rear	HC160048	HC160117
Side	HC160048	HC160117
Top	HC160076	HC159132

Decals	
Part No.	**Description**
HC165025	Beater Warning
HC165454	Cleaning Instructions
HC165091	Clear Overlay
HC165126-01	Panel Removal Batch
HC165461	Selector Switch
HC164171	Ventilation 6" & 20" A/C
HC164172	Ventilation 3" & 4" W/C

Figure 5 B24 Panel View (Sheet 1 of 2)

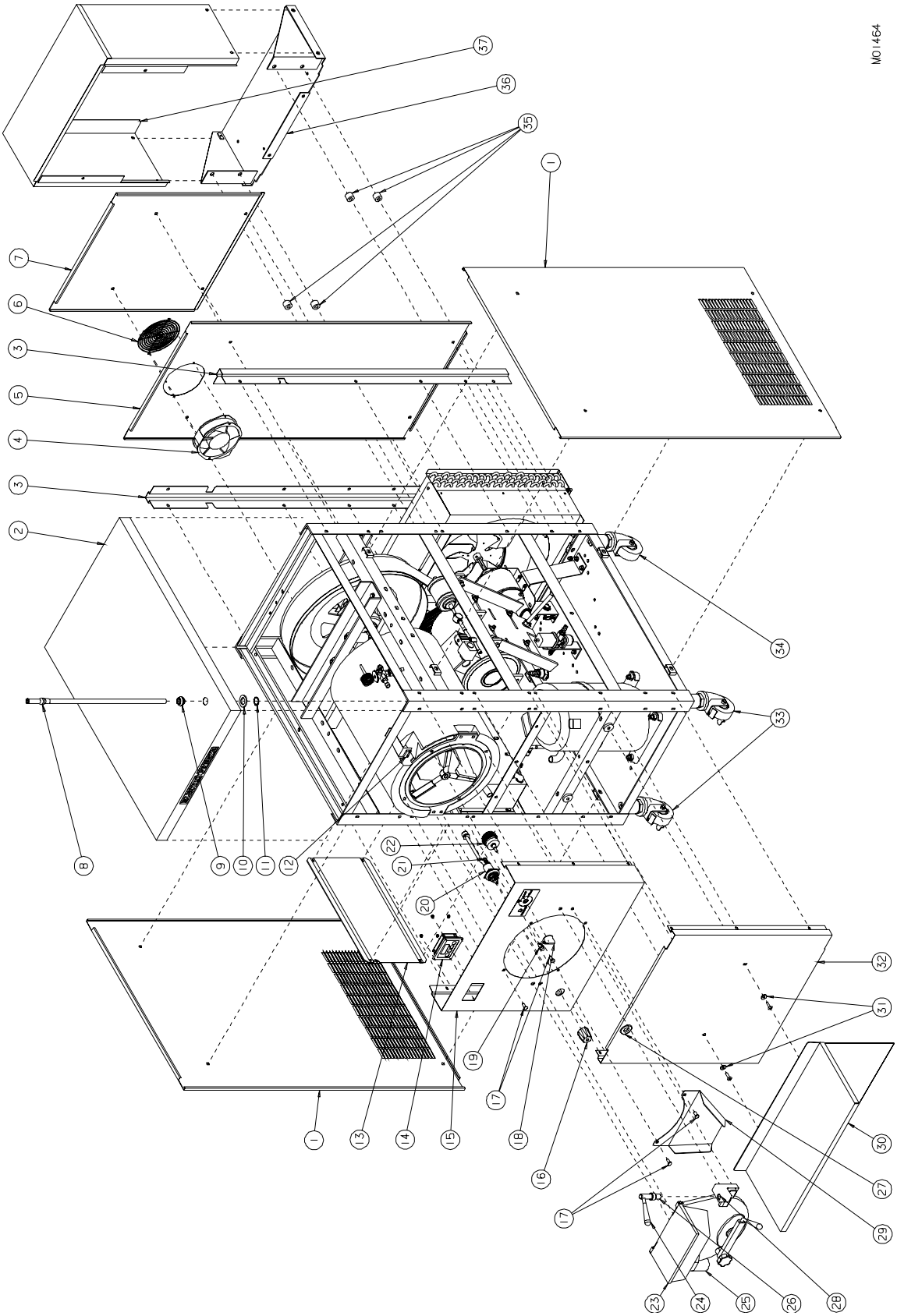

Use only original or authorized replacement parts with this freezer.

Figure 5 B24 Panel View (Sheet 2 of 2)

Item	Part No.	Description
1	HC140213	Panel-Side
2	HC119616	Panel-Assy. Top
3	HC140218	Channel-Rear Corner
4	HC151000	Fan-Axial 230v 212 CFM 35w 50/60 (Water Cooled)
5	HC140342	Panel-Rear W/C (Water Cooled)
6	HC151009	Guard-Finger (Water Cooled)
7	HC140215	Panel-Rear (Air Cooled)
8	HC119469	Hose-Assy. Braided (with nozzle)
9	HC140347	Guide-Nozzle
10	HC160182	Washer-Flat 24mm Nylon
11	HC160430	Ring-Retaining 24mm External
12	HC119825	Kit-Dispense Door Switch Batch
13	HC140224	Cover-Electric Box
14	HC150581	Timer-0-30 Minute Digital
15	HC119606	Panel-Assy. Upper Front
16	HC162631	Knob-Fluted Metal Faucet
17	HC140290	Screw-HXHC M8 x 20 Rounded
18	HC162637	Knob-Selector Switch Black
19	HC150550	Light-Indicator 28v Amber
20	HC155489	Valve-1/4 Turn Faucet
20A	HC160755	Hose-Flex 3/8 Comp x 1/2 IPS
21	HC155618	Adapter-3/8 Hose x 1/4 MPT BR
22	HC150515	Switch-Rotary 3P (Selector)
23	HC119828	Door-Assy. Complete EF Batch
24	HC140209	Handle-Cam Lock
25	IC164100230	Door Hinge
26	HC119455	Cam-Assy. Door Lock
27	HC159063	Grommet-1-5/8 OD x 3/4 ID x 1-1/4 GRV
28	HC140208	Base-Cam Lock
29	HC140236	Chute-Mix Dispense
30	HC119656	Shelf-Assy. Batch
31	HC140354	Spacer-Shelf Mounting
31A	HC159219	Screw-TRPM 1/4-20 x 1 SST
32	HC140341	Panel-Lower Front
33	HC162105	Caster-1-1/4 ST PT w/Brake
33A	HC150736	Nut-Lock Conduit 1-1/4
34	HC162106	Caster-1-1/4 ST PT w/o Brake
34A	HC150736	Nut-Lock Conduit 1-1/4
35	HC132707	Spacer-Cylinder Mtg. Plate (Air Cooled)
36	HC119464	Shelf-Assy. Condenser (Air Cooled)
37	HC119465	Cover-Assy. Condenser (Air Cooled)

Hardware for Panels		
Panel	**Screw**	**Nut-Speed**
Channel	HC160076	HC159133
Front-Lower	HC160076	HC159133
Front-Upper	HC160076	HC160304
Rear	HC160048	HC160117
Side	HC160048	HC160117
Top	HC160076	HC159132

Decals	
Part No.	**Description**
HC165025	Beater Warning
HC165454	Cleaning Instructions
HC165091	Clear Overlay
HC165126-01	Panel Removal Batch
HC165461	Selector Switch
HC164171	Ventilation 6" & 20" A/C
HC164172	Ventilation 3" & 4" W/C

Figure 6 B12 Rear View (Sheet 1 of 2)

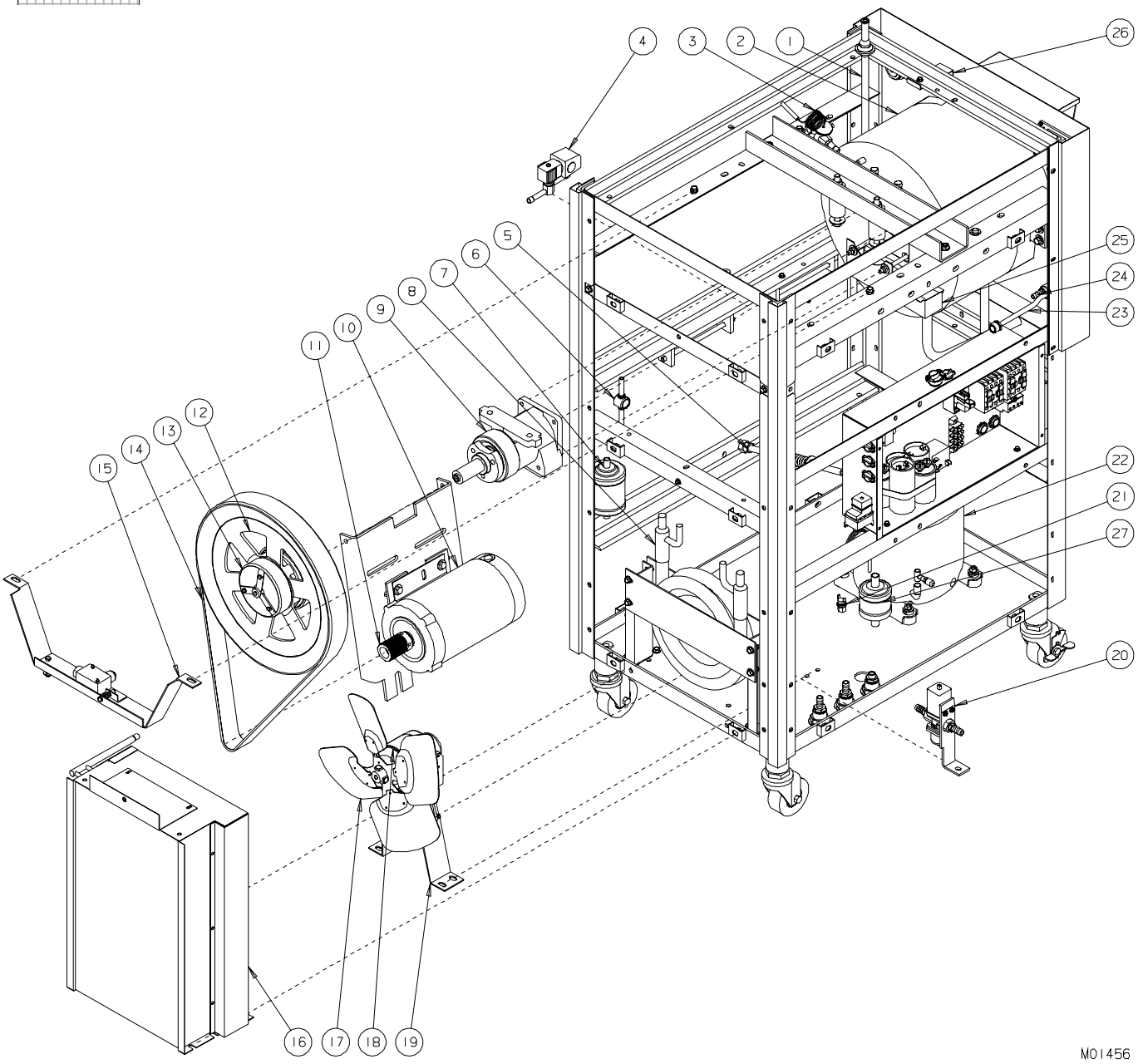

Item	Part No.	Description
1	HC119469	Hose-Assy. Braided
1A	HC140346	Guide-Wash Hose
2	IC115154960	Cylinder-Complete includes
3	IC581101054	Thermostatic Expansion Valve 68Z3438
3A	IC581110613	Orifice-N° 03 068-2079 (Expansion Valve)
4	HC155491	Valve-Solenoid 24v

Use only original or authorized replacement parts with this freezer.

Figure 6 B12 Rear View (Sheet 2 of 2)

Item	Part No.	Description
5	HC140183	Rod-Belt Tension
5A	HC162325	Spring-Compression
5B	HC140271	Tube-Motor Tension Spring
6	HC155059	Glass-Sight
7	HC155054	Drier-Filter 16 cu in
8	HC155029	Condenser-Water (Water Cooled)
9	IC157080300	Drive-Assy. Shaft includes
	IC521111300	... Bearing RIV 3209-2RS1
	IC521111337	... Bearing RIV 6209-2RS1
	IC164110130	... Housing Bearing & Shaft
	IC158115180	... Ring Bearing Spacer
	IC157155070	... Shaft-Assy Drive
	IC158155200	... Spacer Bearing
	IC513101550	... Washer Spacer 45 55 1 DIN988
10	HC119816	Motor-2 HP 208-230-1-60 FE (1 Phase)
	HC150294	..... Capacitor-Start (2 required)
	HC150244	..... Capacitor-Run
or	HC151048	Motor-2 HP 208-230-3-60 FE (3 Phase)
11	HC140337	Sheave-20J 1.575 OD .875 Shaft
12	IC153105090	Pulley-Axial
13		Clutch Assembly (See Figure 5)
14	HC153102	Belt-Poly V 650J20
15		Torque Switch Assy. (See Figure 9)
16	HC118787	Shroud-Assy. Condenser (Air Cooled)
16A	HC155125	Condenser-Air . (Air Cooled)
17	HC159015	Blade-Fan 14 in 20° (Air Cooled)
18	HC151011	Motor-Fan 75w 230-1-60 (Air Cooled)
19	HC139235	Bracket-Fan Motor Support (Air Cooled)
20	HC155410	Valve-Water 3/8
20A	HC155444	Kit-Water Valve Repair
21	HC155405	Cut Out-High Pressure (Water Cooled)
or	HC155450	Cut Out-High Pressure (Air Cooled)
22	HC119540	Compressor-Assy. 208-230-1-60 includes
	HC155574	..... Cap-Access Valve
	HC151463	..... Capacitor-Run
	HC151436	..... Capacitor-Start
	HC155054	..... Drier-Filter 16 cu in
	HC151462	..... Relay-Compressor Start
	HC155419	..... Valve-Access
or	HC119541	Compressor-Assy. 208-230-3-60 includes
	HC155574	..... Cap-Access Valve
	HC155054	..... Drier-Filter 16 cu in
	HC155419	..... Valve-Access
23	HC155489	Valve-1/4 Turn Faucet
24	HC155618	Adapter-3/8 Hose x 1/4 MPT BR
25	HC119605	Tube-Assy. Drain
26	HC119825	Kit-Dispense Door Switch Batch
27	HC155133	Muffler-Discharge (Water Cooled)

Figure 7 B24 Rear View (Sheet 1 of 2)

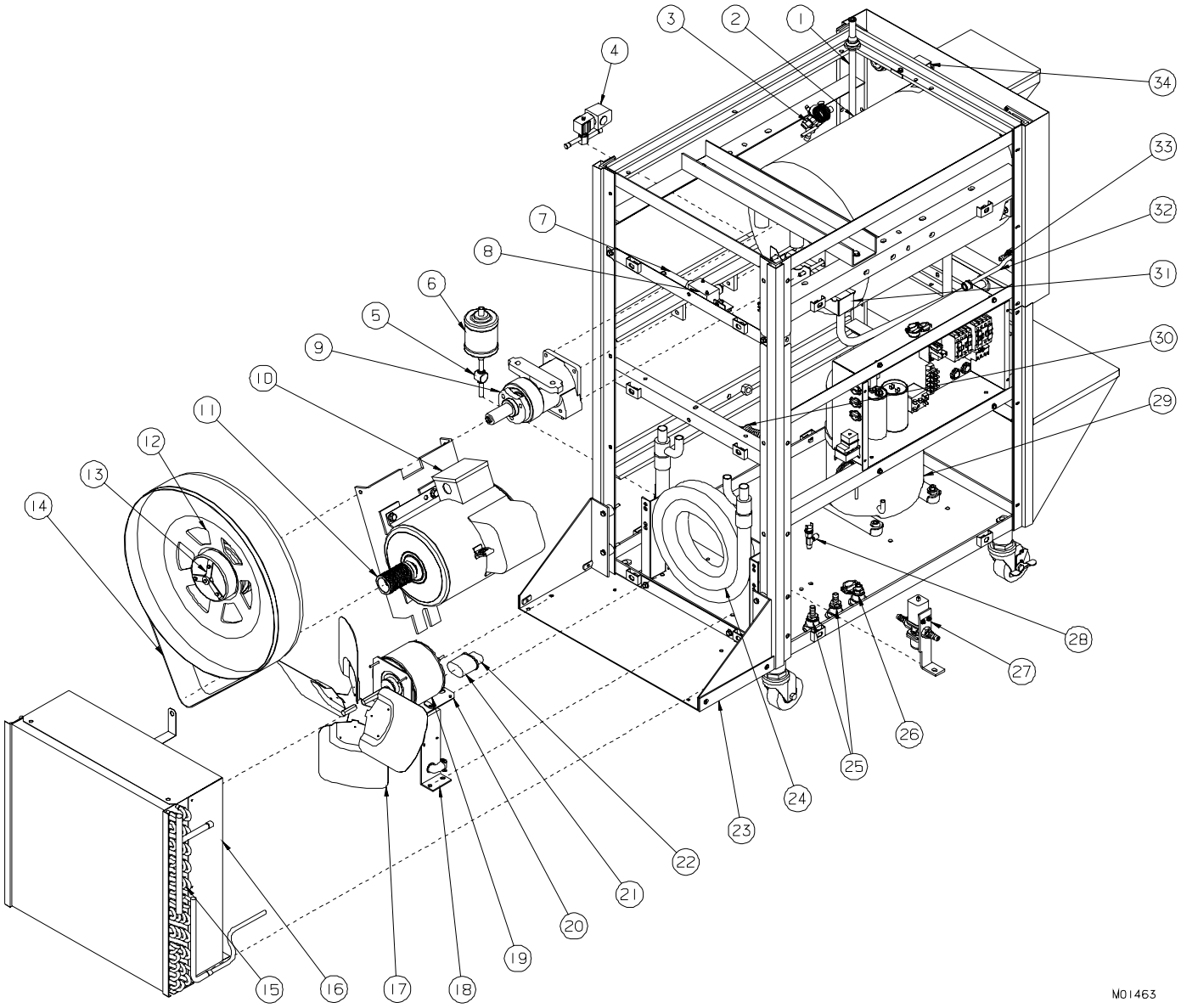

Item	Part No.	Description
1	HC119469	Hose-Assy. Braided
1A	HC140346	Guide-Wash Hose
2	IC115154970	Cylinder-Complete includes
3	IC581101054	Thermostatic Expansion Valve 68Z3438
3A	IC581110614	Orifice-N° 04 068-2084 (Expansion Valve)
4	HC155491	Valve-Solenoid 24v
5	HC155059	Glass-Sight
6	HC155054	Drier-Filter 16 cu in
7	IC107103220	Bracket-Microswitch
7A	HC140340	Bracket-Torque Switch Mounting
7B	IC178150390	Spring-Microswitch Adjusting
8	IC572300142	Microswitch Rear PG

Use only original or authorized replacement parts with this freezer.

Figure 7 B24 Rear View (Sheet 2 of 2)

Item	Part No.	Description
9	IC157080300	Drive-Assy. Shaft includes
		IC521111300 ..... Bearing RIV 3209-2RS1
		IC521111337 ..... Bearing RIV 6209-2RS1
		IC164110130 ..... Housing Bearing & Shaft
		IC158115180 ..... Ring Bearing Spacer
		IC157155070 ..... Shaft-Assy Drive
		IC158155200 ..... Spacer Bearing
		IC513101550 ..... Washer Spacer 45 55 1 DIN988 C70
10	IC551713072	Motor-3HP 115/208-230-1-60 LE includes Built on Capacitor (1 Phase)
		HC150514 ..... Capacitor-Start w/Resistor
or	IC551713042	Motor-3HP 208-230/460-3-60 LE (3 Phase)
11	HC140349	Sheave-30J 1.969 OD 1.125 Shaft
11A	HC160442	Ring-Retaining 38mm Internal
11B	HC160184	Washer-Flat M20 Blue
12	IC153105120	Axial Pulley 45J 500 95
13		Clutch Assembly (See Figure 8)
14	IC531300148	Belt-Drive Poly V
15	HC155132	Condenser-Air (Air Cooled)
16	HC119463	Shroud-Assy Condenser (Air Cooled)
17	HC159016	Blade-Fan 18 in 30° (Air Cooled)
18	HC140240	Bracket-Fan Motor Support (Air Cooled)
19	HC151046	Motor-Fan 1/4hp 208-230v 60 (Air Cooled)
20	HC119462	Bracket-Assy. Fan Motor (Air Cooled)
21	HC151461	Capacitor-Run (Air Cooled)
22	HC199041	Boot-Capacitor Protector (Air Cooled)
23	HC119464	Shelf-Assy. Condenser (Air Cooled)
24	HC155032	Condenser-Water 3 Ton (Water Cooled)
25	HC155586	Adapter-Bulkhead 1/2 FPT (Water Cooled)
25A	HC155616	Adapter-1/2 Hose BARB x 1/2 MPT (Water Cooled)
26	HC155586	Adapter-Bulkhead 1/2 FPT
26A	HC155629	Adapter-3/8 Comp x 1/2 MPT BR
27	HC155410	Valve-Water 3/8
27A	HC155444	Kit-Water Valve Repair
28	HC155405	Cut Out-High Pressure (Water Cooled)
or	HC155450	Cut Out-High Pressure (Air Cooled)
29	HC119508	Compressor-Assy. 208-230-1-60 includes
		HC150362 ..... Capacitor-Run
		HC151460 ..... Capacitor-Start
		HC155054 ..... Drier-Filter 16 cu in
		HC151459 ..... Relay-Compressor
or	HC119815	Compressor 208-230/3/60 includes
		HC155054 ..... Drier-Filter 16 cu in
29A	HC165534	Insulation-Compr Wrap Bristol
29B	HC160419	Rivet-Ratchet Plastic (Compressor Wrap)
29C	HC155419	Valve-Access
30	HC140183	Rod-Belt Tension
30A	HC162325	Spring-Compression
30B	HC140271	Tube-Motor Tension Spring
31	HC119458	Tube-Assy. Drain
32	HC155489	Valve-1/4 Turn Faucet
33	HC155618	Adapter-3/8 Hose x 1/4 MPT BR
34	HC119825	Kit-Dispense Door Switch Batch

Figure 8 Drive Assembly (Sheet 1 of 2)

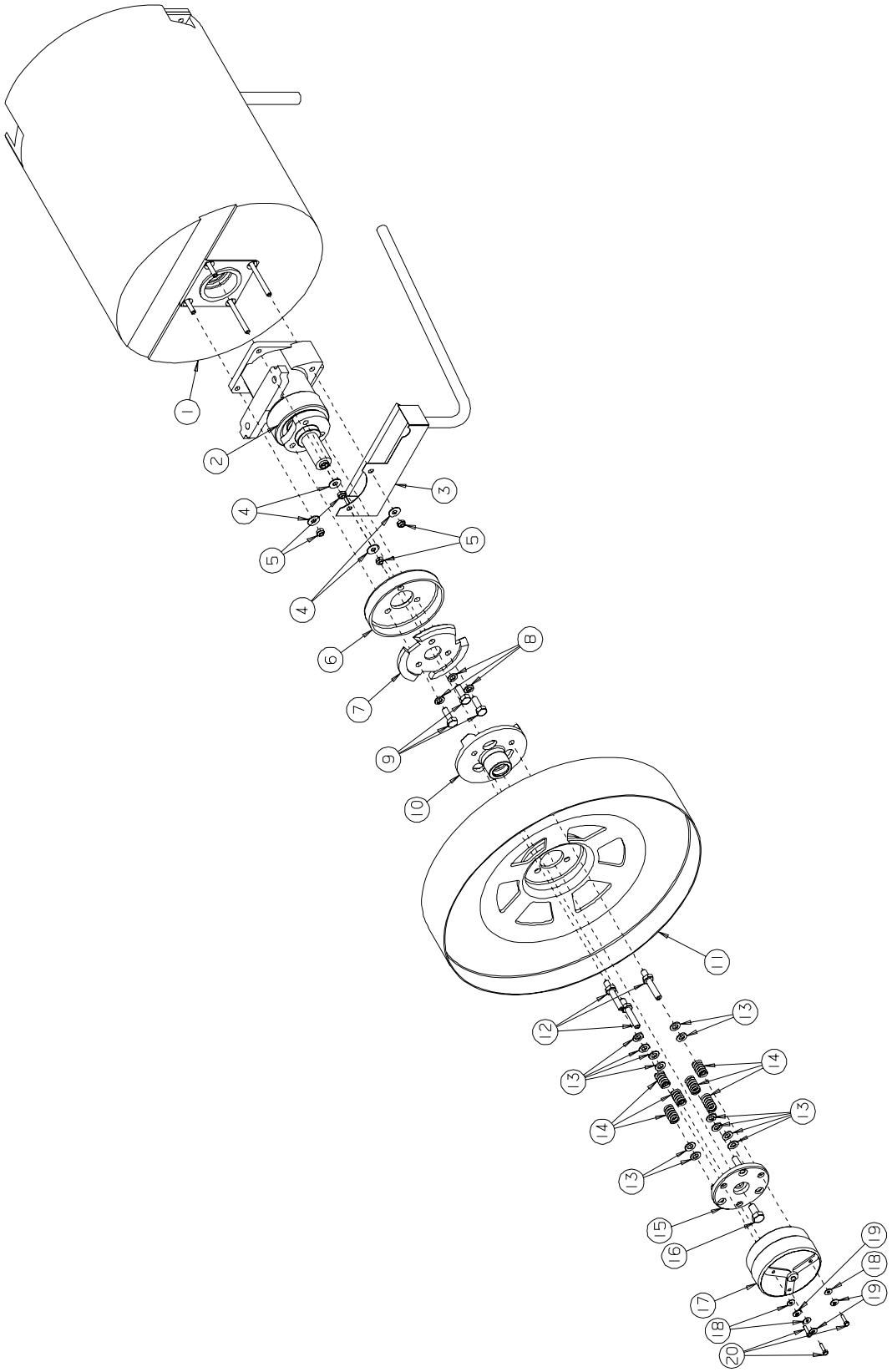

Use only original or authorized replacement parts with this freezer.

Figure 8 Drive Assembly (Sheet 2 of 2)

Item	Part No.	Description
1	IC115154960	Cylinder-Complete (B12)
	IC115154970	Cylinder-Complete (B24)
2	IC157080300	Drive-Assy.
3	HC119605	Tube-Assy. Drain (B12)
	HC119458	Tube-Assy. Drain (B24)
4	HC160131	Washer-Flat 5/16 ZN
5	HC160194	Nut-El Stop M8 ZN Blue
6	IC164118520	Cover-Clutch Front
7	IC164115020	Clutch-Drive
8	HC160192	Screw-HXHC M10 X 30mm CL 8.8 ZN Blue
9	HC160210	Washer-Ext Tooth Lock M10 ZN Blue
10	IC164116020	Clutch-Driven
11	IC153105090	Pulley-Axial (Model B12)
	IC153105120	Pulley-Axial 45J 500 95 (Model B24)
12	IC171110120	Stud-Clutch Spring
13	HC159931	Washer-Flat M10 x 19mm OD ZN Blue
14	IC178150200	Spring-Clutch
15	IC164117020	Base-Clutch Spring
16	HC160085	Screw-HXHM M12 x 25mm ZN Blue
17	IC164118600	Cover-Clutch Rear
18	HC160138	Washer-Flat #10 ZN
19	HC160189	Washer-Lock M5 ZN Blue
20	HC159987	Screw-HXHM M5 x 20mm ZN Blue
21	HC140387	Spacer-Sheave

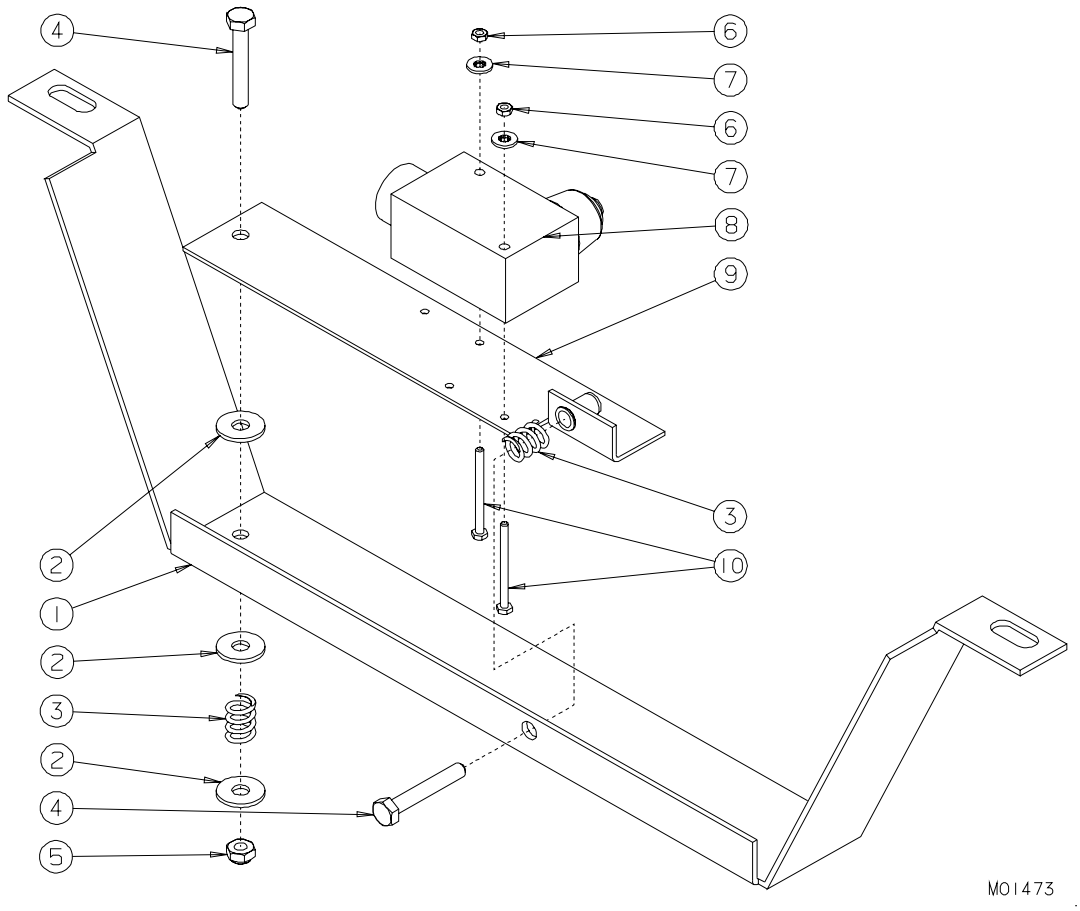

Figure 9 Torque Switch Assembly

Item	Part No.	Description
1	HC140334	Bracket-Torque Switch Mounting (B12)
2	HC140340	Bracket-Torque Switch Mounting (B24)
3	IC178150390	Spring-Microswitch Adjusting
4	HC160091	Screw-HXHM M6 x 40mm ZN Blue
5	HC160185	Nut-El Stop M6 ZN Blue
6	HC159958	Nut-Hex M3 ZN Blue
7	HC160191	Washer-INT Tooth M3 ZN Blue
8	IC572300142	Microswitch-Rear PG
9	IC107103220	Bracket-Microswitch
10	HC159956	Screw-HXHM M3 x 40mm ZN Blue

See Figures 6 and 7 - Torque switch is mounted differently.

Use only original or authorized replacement parts with this freezer.

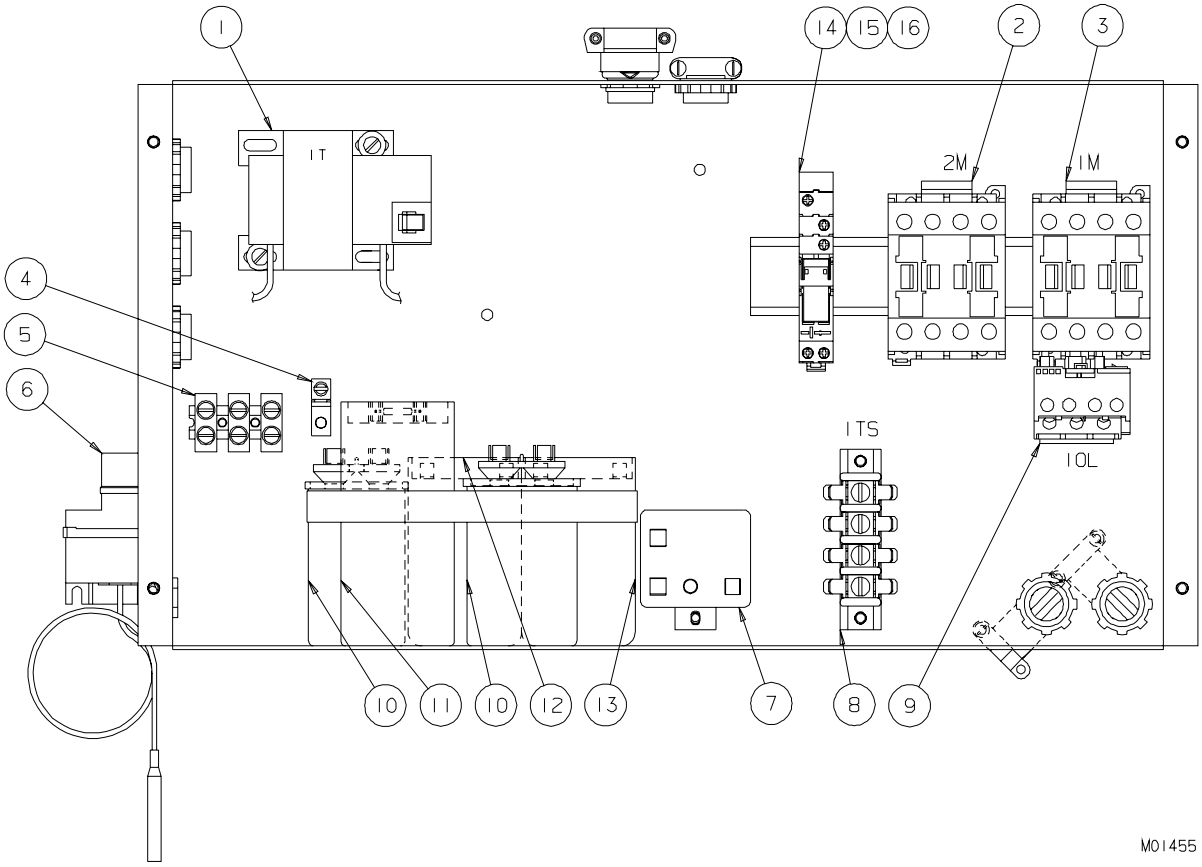

Figure 10 Electric Box

Item	Part No.	Description
1	IC574100325	Transformer-75VA/24VAC/MURD
2	HC150160	Contactor-IEC 25A 4 Pole 24v Coil (Dasher)
2A	HC150169	Coil-Replace 24VAC DPBF25
3	HC150160	Contactor-IEC 25A 4 Pole 24v Coil (Compressor and Fan)
3A	HC150169	Coil-Replace 24VAC DPBF25
4	HC150745	Connector-Mech Grounding CU
5	HC139055-01	Strip-Terminal 3 Pole
6	HC155482	Cut Out-Low Pressure 0 PSIG
7	HC151462	Relay-Compressor Start (B12 - 1 Phase)
	HC151459	Relay-Compressor (B24 - 1 Phase)
8	HC150795	Strip-Terminal
9	HC150162	Relay-Overload 6-10A Auto Reset (B12 -1 Phase, B12 and B24 - 3 Phase)
	HC150163	Relay-Overload 14-32A Auto Reset (B24 - 1 Phase)
10	HC150294 (2)	Capacitor-Start (Motor) (B12 - 1 Phase)
11	HC150244	Capacitor-Run (Motor) (B12 - 1 Phase)
12	HC151463	Capacitor-Run (Compressor) (B12 - 1 Phase)
	HC150362	Capacitor-Run (Compressor) (B24 - 1 Phase)
13	HC151436	Capacitor-Start (Compressor) (B12 - 1 Phase)
	HC151460	Capacitor-Start (Compressor) (B24 - 1 Phase)
14	HC150164	Relay-Miniature SPDT 24v Coil
15	HC150165	Socket-Miniature Relay Clamp
16	HC150166	Clip-Miniature Relay Retaining

Accessories

Part No.	Description
HC155613	Adapter-1/2 MPT x 3/4 Garden BR
HC196103	Bottle-Wash 500ml
HC158026	Brush-1 inch dia x 12 inch long
HC158020	Brush-6 inch x 2-3/4 w/9 inch handle
HC158077	Brush-9/16 inch w/36 inch handle
HC162105	Caster-1 1/4 ST PT w/brake
HC162106	Caster-1 1/4 ST PT w/o brake
HC158051	Cup-Overrun Measuring 1 Pint (use with P/N HC158049 scale)
HC158000A	Lubricant-Petrol Gel 4 oz. tube (per tube)
HC150736	Nut-Lock Conduit 1 1/4 (casters)
HC158013	Sanitizer-Stera Sheen Sample
HC158014	Sanitizer-Stera Sheen case/4 jars
HC158014A	Sanitizer-Stera Sheen 4 lb. jar
HC158049	Scale-Overrun
HC169374	Tool-O-ring Removal

Use only original or authorized replacement parts with this freezer.

Alphabetized Parts List for Model B12 and B24

Important: All parts shown are for standard models designed for 230V/1PH/60HZ or 208-230V/3PH/60HZ.

PART DESCRIPTION	PART NUMBER	QTY	SERIAL NUMBER (FROM – TO)
Adapter-1/2 Hose BARB x 1/2 MPT (Water Cooled) (B24)	HC155616	2	E2K –
Adapter-1/2 MPT x 3/4 Garden BR (Accessories)	HC155613	1	E2K –
Adapter-3/8 Comp x 1/2 MPT BR (B24)	HC155629	1	E2K –
Adapter-3/8 Hose x 1/4 MPT BR	HC155618	1	E2K –
Adapter-Bulkhead 1/2 FPT (Water Cooled)(B24)	HC155586	2	E2K –
Axial Pulley (B12)	IC153105090	1	E2K –
Axial Pulley 45J 500 95 (B24)	IC153105120	1	E2K –
Base-Cam Lock	HC140208	1	F2K –
Base-Clutch Spring	IC164117020	1	F2K –
Bearing RIV 3209-2R51 (Bearing-Assy)	IC521111300	1	F2K –
Bearing RIV 6209-2R51 (Bearing-Assy)	IC521111337	1	F2K –
Bearing-Assy. includes	*See Drive-Assy. Shaft*		
Beater Seal Shaft Silicone	IC177120280	1	F2K –
Belt-Poly V 30J (B24)	IC531300148	1	F2K –
Belt-Poly V 650 J20 (B12)	HC153102	1	E2K –
Blade-Fan 14 in. 20° (Air Cooled) (B12)	HC159015	1	E2K –
Blade-Fan 18 in. 30° (Air Cooled) (B24)	HC159016	1	E2K –
Blade-Scraper	IC141116030	6	F2K –
Boot-Capacitor Protector (Air Cooled)(B24)	HC199041	1	F2K –
Bottle-Wash 500ml	HC196103	1	F2K –
Bracket-Assy. Fan Motor (Air Cooled) (B24)	HC119462	1	E2K –
Bracket-Fan Motor Support(Air Cooled)(B12)	HC139235	1	E2K –
Bracket-Fan Motor Support(Air Cooled)(B24)	HC140240	1	E2K –
Bracket-Microswitch	IC107103220	1	E2K –
Bracket-Torque Switch Mtg. (B12)	HC140334	1	E2K –
Bracket-Torque Switch Mtg. (B24)	HC140340	1	E2K –

* As Required
NLA = No Longer Available

Use only original or authorized replacement parts with this freezer.

Alphabetized Parts List for Model B12 and B24

Important: All parts shown are for standard models designed for 230V/1PH/60HZ or 208-230V/3ph/60HZ..

PART DESCRIPTION	PART NUMBER	QTY	SERIAL NUMBER (FROM – TO)
Brush-1 inch dia x 12 inch long	HC158026	1	F2K –
Brush-9/16 inch w/36 inch handle	HC158077	1	F2K –
Brush-6 inch x 2-3/4 w/9 inch handle	HC158020	1	F2K –
Cam-Assy. Door Lock (Door Assy)	HC119455	1	F2K –
Cap-Access Valve (B12)	HC155574	1	F2K –
Capacitor-Run (Compressor) (B12 - 1 Phase)	HC151463	1	F2K –
Capacitor-Run (Compressor) (B24 - 1 Phase)	HC150362	1	F2K –
Capacitor-Run (Fan Motor) (B24 - A/C)	HC151461	1	F2K –
Capacitor-Run (Motor) (B12 - 1 Phase)	HC150244	1	F2K –
Capacitor-Start (Compressor) (B12 - 1 Phase)	HC151436	1	F2K –
Capacitor-Start (Compressor) (B24 - 1 Phase)	HC151460	1	F2K –
Capacitor-Start (Motor) (B12 - 1 Phase)	HC150294	2	F2K –
Capacitor-Start w/Resistor (Motor) (B24 - 1 Phase)	HC150514	1	F2K –
Caster-1 1/4 ST PT w/Brake	HC162105	2	F2K –
Caster-1-1/4 ST PT w/o Brake	HC162106	2	F2K –
Channel-Rear Corner	HC140218	2	F2K –
Chute-Mix Dispense	HC140236	1	F2K –
Clamp-Hose 13/16 to 1-1/2	HC160754	2	F2K –
Clip-Minature Relay Retaining (Electric Box)	HC150166	1	F2K –
Clutch-Drive	IC164115020	1	F2K –
Clutch-Driven	IC164116020	1	F2K –
Coil-Replace 24VAC DPBF25 (Contactor)	HC150169	*	F2K –
Compressor-Assy. 208-230-1-60 (B12 - 1 Phase)			
includes compressor and	HC119508	1	F2K –
Cap-Access Valve	HC155574	1	F2K –
Capacitor-Run	HC150463	1	F2K –
Capacitor-Start	HC151436	1	F2K –
Drier-Filter 16 cu in	HC155054	1	F2K –
Relay-Compressor Start	HC151462	1	F2K –
Valve-Access	HC155419	1	F2K –

* As Required
NLA = No Longer Available

Use only original or authorized replacement parts with this freezer.

Alphabetized Parts List for Model B12 and B24

Important: All parts shown are for standard models designed for 230V/1PH/60HZ or 208-230V/3PH/60HZ.

PART DESCRIPTION	PART NUMBER	QTY	SERIAL NUMBER (FROM – TO)
Compressor-Assy. 208-230-1-60 (B24 - 1 Phase)			
includes compressor and	HC119508	1	F2K –
Capacitor-Run	HC150362	1	F2K –
Capacitor-Start	HC151460	1	F2K –
Drier-Filter 16 cu in	HC155054	1	F2K –
Relay-Compressor	HC151459	1	F2K –
Compressor-Assy. 208-230-3-60 (B12 - 3 Phase)			
includes compressor and	HC119541	1	F2K –
Cap-Access Valve	HC155574	1	F2K –
Drier-Filter 16 cu in	HC155054	1	F2K –
Valve-Access	HC155419	1	F2K –
Compressor-Assy. 208-230-3-60 (B24 - 3 Phase)			
includes compressor and	HC119815	1	F2K –
Drier-Filter 16 cu in	HC155054	1	F2K –
Condenser-Air (B12)(Air Cooled)	HC155125	1	F2K –
Condenser-Air (B24)(Air Cooled)	HC155132	1	F2K –
Condenser-Water (B12)(Water Cooled)	HC155029	1	F2K –
Condenser-Water 3 Ton (B24)(Water Cooled)	HC155032	1	F2K –
Connector-Mech Grounding CU	HC150745	1	F2K –
Contactor-IEC 25A 4 Pole 24v Coil (Dasher & Compressor/Fan)(Electric Box)	HC150160	2	F2K –
Cover-Assy. Condenser (B24)(Air Cooled)	HC119465	1	F2K –
Cover-Clutch Front	IC164118520	1	F2K –
Cover-Clutch Rear	IC164118600	1	F2K –
Cover-Electric Box	HC140224	1	F2K –
Cup-Overrun (use with P/N HC158049 scale)	HC158051	1	F2K –
Cut Out-High Pressure (Air Cooled)	HC155450	1	F2K –
Cut Out-High Pressure (Water Cooled)	HC155405	1	F2K –
Cut Out-Low Pressure 0 PSIG(Electric Box)	HC155482	1	F2K –
Cylinder-Complete (B12)	IC115154960	1	F2K –
Cylinder-Complete (B24)	IC115154970	1	F2K –

* As Required
NLA = No Longer Available

Use only original or authorized replacement parts with this freezer.

Alphabetized Parts List for Model B12 and B24

Important: All parts shown are for standard models designed for 230V/1PH/60HZ or 208-230V/3ph/60HZ..

PART DESCRIPTION	PART NUMBER	QTY	SERIAL NUMBER (FROM – TO)
Dasher-12 qt. (B12)	IC142061040	1	F2K –
Dasher-24 qt. (B24)	IC142061030	1	F2K –
Decal-Beater Warning	HC165025	1	F2K –
Decal-Cleaning Instructions	HC165454	1	F2K –
Decal-Clear Overlay	HC165091	1	F2K –
Decal-Panel Removal Batch	HC165126-01	3	F2K –
Decal-Selector Switch	HC165461	1	F2K –
Decal-Ventilation 6-inch Rear	HC169054	1	F2K –
Decal-Ventilation 3" & 4" (Water Cooled)	HC164172	1	F2K –
Decal-Ventilation 6" & 20" (Air Cooled)	HC164171	1	F2K –
Door Hinge	IC164100230	1	F2K –
Door-Assy. Complete EF Batch	HC119828	1	F2K –
Knob-Door Front	IC173100490	1	F2K –
Lever-Door Front	IC155185140	1	F2K –
Spring-Compression SST	IC178100060	1	F2K –
Spacer-Door Front	IC107170900	1	F2K –
Screw-FHMS M4 x 20 SST	IC511530420	1	F2K –
Door-Dispense	IC118125050	1	F2K –
Gasket-Dispense Door	IC158200710	1	F2K –
Door-Dispense EF	IC118130800	1	F2K –
Gasket-Door	IC158200090	1	F2K –
Pin-Clevis	HC160353	2	F2K –
Lid-Door	HC140198	1	F2K –
Door-Dispense (Door-Assy.)	IC118125050	1	F2K –
Door-Dispense EF (Door-Assy.)	IC118130800	1	F2K –
Drier-Filter 16 cu in	HC155054	1	F2K –
Drive-Assy. Shaft includes	IC157080300	1	F2K –
Bearing RIV 3209-2R51	IC521111300	1	F2K –
Bearing RIV 6209-2R51	IC521111337	1	F2K –
Housing Bearing & Shaft	IC164110130	1	F2K –
Ring Bearing Spacer	IC158115180	1	F2K –
Shaft-Assy Drive	IC157155070	1	F2K –
Spacer Bearing	IC158155200	1	F2K –
Washer Spacer 45 55 1 DIN988	IC513101550	1	F2K –

* As Required
NLA = No Longer Available

Use only original or authorized replacement parts with this freezer.

Alphabetized Parts List for Model B12 and B24

Important: All parts shown are for standard models designed for 230V/1PH/60HZ or 208-230V/3PH/60HZ.

PART DESCRIPTION	PART NUMBER	QTY	SERIAL NUMBER (FROM – TO)
Fan-Axial 230v 212CFM 35watt 50/60	HC151000	1	F2K –
Gasket-Dispense Door (Door Assy)	IC158200710	1	F2K –
Gasket-Door (Door Assy)	IC158200090	1	F2K –
Glass-Sight	HC155059	1	F2K –
Grommet-1-5/8 OD x 3/4 ID x 1-1/4 GRV.	HC159063	1	F2K –
Guard-Finger	HC151009	1	F2K –
Guide-Nozzle	HC140347	1	F2K –
Guide-Wash Hose	HC140346	1	F2K –
Handle-Cam Lock (Door Assy)	HC140209	1	F2K –
Hose-Assy. Braided (with nozzle)	HC119469	1	F2K –
Hose-Flex 3/8 Comp x 1/2 IPS	HC160755	1	F2K –
Housing Bearing & Shaft (Drive Shaft Assy.)	IC164110130		F2K –
Insulation-Compr Wrap Bristol (B24)	HC165534	1	F2K –
Kit-Dispense Head Switch Batch	HC119825	1	F2K –
Kit-Water Valve Repair	HC155444	1	F2K –
Knob-Door Front (Door Assy.)	IC173100490	2	F2K –
Knob-Fluted Metal Faucet	HC162631	1	F2K –
Knob-Selector Switch Black	HC162637	1	F2K –
Lever-Door Front (Door Assy)	HC155184140	1	F2K –
Lid-Door (Door Assy)	HC140198	1	F2K –
Light-Indicator 28v Amber	HC150550	1	F2K –
Lubricant-Petrol Gel 4 oz. tube (per tube)	HC158000A	*	F2K –
Microswitch-Rear PG	IC572300142	1	F2K –

* As Required
NLA = No Longer Available

Use only original or authorized replacement parts with this freezer.

Alphabetized Parts List for Model B12 and B24

Important: All parts shown are for standard models designed for 230V/1PH/60HZ or 208-230V/3ph/60HZ..

PART DESCRIPTION	PART NUMBER	QTY	SERIAL NUMBER (FROM – TO)	
Motor-2HP 208-230-1-60 FE (1 Phase)(B12)				
includes motor and	HC119816	1	F2K	–
Capacitor-Run	HC150244	1	F2K	–
Capacitor-Start	HC150294	2	F2K	–
Motor-2HP 208-23-3-60 FE (3 Phase)(B12)	HC151048	1	F2K	–
Motor-3HP 115/208-230-1-60 LE	IC551713072	1	F2K	–
Motor-3HP 208-230/460-3-60 LE	IC551713042	1	F2K	–
Motor-Fan 1/4HP 208-230v 60				
(Air Cooled)(B24)	HC151046	1	F2K	–
Motor-Fan 75w 230-1-60 (Air Cooled)(B12)	HC151011	1	F2K	–
Muffler-Discharge (Water Cooled B12)	HC155133	1	J2K	–
Nut-El Stop M6 ZN Blue(Switch-Assy. Torque)	HC160185	1	F2K	–
Nut-El Stop M8 ZN Blue (Drive-Assy.)	HC160194	4	F2K	–
Nut-Hex M3 ZN Blue (Switch-Assy. Torque)	HC159958	2	F2K	–
Nut-Lock Conduit 1-1/4	HC150736	4	F2K	–
Nut-Speed #10-24 .025-064SST(Top Panel)	HC159132	4	F2K	–
Nut-Speed #10-24 .156-.187				
(Rear Channel and Lower Front Panel)	HC159133	18	F2K	–
Nut-Speed 1/4-20 .064-.125				
(Rear & Side Panels)	HC160117	12	F2K	–
Oriface-N° 03 068-2079(Cylinder Assy.)(B12)	IC581110613	1	F2K	–
Oriface-N° 04 068-2084(Cylinder Assy.)(B24)	IC581110614	1	F2K	–
O-ring (Scraper Blade)(B12)	HC160646	4	F2K	–
O-ring (Scraper Blade)(B24)	HC160646	6	F2K	–
Panel-Assy. Rear (Air Cooled)(B12)	HC119604	1	F2K	–
Panel-Assy. Top	HC119616	1	F2K	–
Panel-Assy. Upper Front	HC119606	1	F2K	–

* As Required
NLA = No Longer Available

Use only original or authorized replacement parts with this freezer.

Alphabetized Parts List for Model B12 and B24

Important: All parts shown are for standard models designed for 230V/1PH/60HZ or 208-230V/3PH/60HZ.

PART DESCRIPTION	PART NUMBER	QTY	SERIAL NUMBER (FROM – TO)
Panel-Lower Front	HC140341	1	F2K –
Panel-Rear (Air Cooled)(B24)	HC140215	1	F2K –
Panel-Rear (Water Cooled)	HC140342	1	F2K –
Panel-Side	HC140213	2	F2K –
Pin-Clevis (Door Assy)	HC160353	2	F2K –
Pulley-Axial (B12)	IC153105090	1	F2K –
Pulley-Axial 45 J 500 95 (Driven)(B24)	IC153105120	1	F2K –
Relay-Compressor (1 Phase)(B24)	HC151459	1	F2K –
Relay-Compressor Start (1 Phase)(B12)	HC151462	1	F2K –
Relay-Miniature SPDT 24v Coil(Electric Box)	HC150164	1	F2K –
Relay-Overload 6-10A Auto Reset (B12)(B24-3 Phase) (Electric Box)	HC150162	1	F2K –
Relay-Overload 14-32A Auto Reset (B24-1 Phase) (Electric Box)	HC150163	1	F2K –
Ring Bearing Spacer (Bearing-Assy)	IC158115180	1	F2K –
Ring-Retaining 24mm Ext.	HC160430	1	F2K –
Rivet-Ratchet Plastic(Compressor Wrap)(B24)	HC160419	4	F2K –
Rod-Belt Tension	HC140183	1	F2K –
Sanitizer-Stera Sheen (per case/4 jars)	HC158014	*	F2K –
Sanitizer-Stera Sheen (sample)	HC158013	*	F2K –
Screw-FHMS M4 x 20 SST (Door Assy.)	IC511530420	1	F2K –
Screw-HXHM M3 x 40mm ZN Blue (Torque Switch Assy.)	HC159956	2	F2K –
Screw-HXHM M5 x 20mm ZN Blue (Drive Assy.)	HC159987	3	F2K –

* As Required
NLA = No Longer Available

Use only original or authorized replacement parts with this freezer.

Alphabetized Parts List for Model B12 and B24

Important: All parts shown are for standard models designed for 230V/1PH/60HZ or 208-230V/3ph/60HZ..

PART DESCRIPTION	PART NUMBER	QTY	SERIAL NUMBER (FROM – TO)
Screw-HXHM M6 x 40mm ZN Blue (Torque Switch Assy.)	HC160091	2	F2K –
Screw-HXHC M8 x 20 Rounded (Panel View)	HC140290	4	F2K –
Screw-HXHC M10 X 30mm CL 8.8 ZN Blue (Drive Assy.)	HC160192	3	F2K –
Screw-HXHM M12 x 25mm ZN Blue (Drive Assy.)	HC160085	1	F2K –
Screw-TRPM #10-24 x 1/2SST(Rear Channel) (Side, Top and Front panels)	HC160076	20	F2K –
Screw-TRPM 1/4-20 x 1/2 SST	HC160048	12	F2K –
Screw-TRPM 1/4-20 x 1 SST	HC159219	2	F2K –
Seal-Shaft	IC177120280	1	F2K –
Shaft-Assy. Drive	*See Drive-Assy. Shaft*		
Sheave-20J 1.575 OD .875 Shaft (Drive)(B12)	HC140220	1	F2K –
Sheave-30J 1.969 OD 1.125 Shaft (Drive)(B24)	HC140349	1	F2K –
Shelf-Assy. Batch	HC119656	1	F2K –
Shelf-Assy. Condenser (Air Cooled)(B24)	HC119464	1	F2K –
Shroud-Assy. Condenser (Air Cooled)(B24)	HC119463	1	F2K –
Shroud-Assy. Condenser (Air Cooled)(B12)	HC118787	1	F2K –
Socket-Miniature Relay Clamp (Electric Box)	HC150165	1	F2K –
Spacer-Bearing (Drive Assy.)	IC158155200	1	F2K –
Soacer-Cylinder Mtg. Plate (Air Cooled)	HC132707	4	F2K –
Spacer-Door Front (Door Assy.)	IC107170900	1	F2K –
Spacer-Shelf Mounting	HC140254	2	F2K –
Spring-Clutch (Drive Assy.)	IC178150200	6	F2K –
Spring-Compression	HC162325	1	F2K –
Spring-Compression SST (Door Assy)	IC178100060	1	F2K –
Spring-Microswitch Adjusting (Torque Switch Assy.)	IC178150390	2	F2K –

* As Required
NLA = No Longer Available

Use only original or authorized replacement parts with this freezer.

Alphabetized Parts List for Model B12 and B24

Important: All parts shown are for standard models designed for 230V/1PH/60HZ or 208-230V/3PH/60HZ.

PART DESCRIPTION	PART NUMBER	QTY	SERIAL NUMBER (FROM – TO)
Strip-Terminal (Electric Box)	HC150795	1	F2K –
Strip-Terminal 3 Pole (Electric Box)	HC139055-01	1	F2K –
Stud-Clutch Spring (Drive Assy.)	C171110120	3	F2K –
Switch-Rotary 3P	HC150515	1	F2K –
Thermostatic Expansion Valve 68Z3438	IC581101054	1	F2K –
Timer-0-30 Minute Digital	HC150581	1	F2K –
Transformer-75VA/24VAC/MURD	IC574100325	1	F2K –
Tube-Assy. Drain (B12)	HC119605	1	F2K –
Tube-Assy. Drain (B24)	HC119458	1	F2K –
Tube-Motor Tension Spring	HC140271	1	F2K –
Valve-1/4 Turn Faucet	HC155489	1	F2K –
Valve-Access	HC155419	1	F2K –
Valve-Assy Water includes	113769-01	1	F2K –
Valve-Water 3/8	HC155410	1	F2K –
Valve-Solenoid 24v	HC155491	1	F2K –
Valve-Thermostatic Expansion 68Z3438	IC581101054	1	F2K –
Valve-Water 3/8	HC155410	1	F2K –
Washer-Ext Tooth Lock M10 ZN Blue ,	HC160210	3	F2K –
Washer-Flat #10 ZN (Drive Assy.)	HC160138	6	F2K –
Washer-Flat M20 Blue (B24)	HC160184	1	F2K –
Washer-Flat 24mm Nylon	HC160182	1	F2K –
Washer-Flat 5/16 ZN (Drive Assy.)	HC160131	2	F2K –
Washer-Flat M10 x 19mm OD ZN Blue(Drive Assy.)	HC159931	12	F2K –
Washer-INT Tooth M3 ZN Blue(Torque Assy.)	HC160191	2	F2K –
Washer-Lock M5 ZN Blue (Drive Assy.)	HC160189	3	F2K –
Washer-Spacer (Bearing-Assy)	IC513101550	1	F2K –

* As Required
NLA = No Longer Available

Use only original or authorized replacement parts with this freezer.