INSTALLATION AND OPERATING INSTRUCTIONS

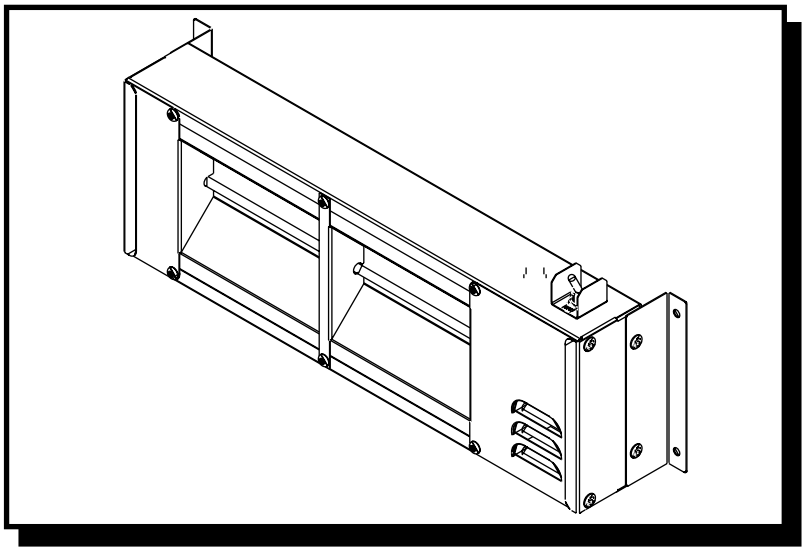

Models: FD, FDD, FDL & FDDL

OVERHEAD WARMERS

INTENDED FOR OTHER THAN HOUSEHOLD USE

RETAIN THIS MANUAL FOR FUTURE REFERENCE
UNIT MUST BE KEPT CLEAR OF COMBUSTIBLES AT ALL TIMES

FOR YOUR SAFETY: Do not store or use gasoline or other flammable vapors and liquids in the vicinity of this or any other appliance.

WARNING: Improper installation, adjustment, alteration, service or maintenance can cause property damage, injury or death. Read the Installation, Operating and Maintenance Instructions thoroughly before installing or servicing this equipment.

Initial heating of unit may generate smoke or fumes and must be done in a well ventilated area. Overexposure to smoke or fumes may cause nausea or dizziness.

This equipment has been engineered to provide you with year-round dependable service when used according to the instructions in this manual and standard commercial kitchen practices.

ANSI/NSF4

P/N 70400000 Rev. 3/06

Phone: (214) 421-7366
Fax: (214) 565-0976
Toll Free: (800) 527-2100
Website: www.apwwyott.com
E-mail: info@apwwyott.com

APW WYOTT
729 Third Avenue
Dallas, TX 75226

TABLE OF CONTENTS

SECTION	ITEM	PAGE
1	**Owner's Information**	2
	General Information	2
	Installation Instructions	3
	General Operation Instructions	4
	Warranty Information	4
2	**Important Safety Information**	4
3	**Specifications**	4
	Electrical	4
	Dimensions	5
4	**Operation**	6
	Operating Instructions	6
5	**Cleaning**	6
	General Cleaning Instructions	6
6	**Troubleshooting**	6
7	**Wiring Diagrams**.	7
	FD Wiring Diagrams	7
	FDL Wiring Diagrams	8
	FDD Wiring Diagrams	9
	FDDL Wiring Diagrams	10
8	**Parts Lists**	11
	FD Replacement Parts	11
	FDL Replacement Parts	14
	FDD or FDDL Replacement Parts	17
9	**Warranty**	20

1. OWNERS INFORMATION

General Information:

1. Always clean equipment thoroughly before first use. (See general cleaning instructions).
2. Check rating label for your model designation and electrical rating.
3. For best results, use stainless steel countertops.
4. All dimensions in parenthesis in centimeters unless noted.
5. APW Wyott Overhead Foodwarmers are constructed from high quality stainless steel and available in lengths from 18" to 96". Utilizing a metal sheath-heating element with a specially designed reflector, these units give uniform heat over the entire holding surface.
6. In Europe, contact an APW Wyott authorized service agency for replacement light bulbs.

Installation Instructions:

A. Always clean equipment thoroughly before first use (See cleaning instructions).
B. Provide the following clearances around foodwarmer:

Do not install closer than: **A** = Minimum clearance (in inches) to ***Bottom Surface of unit from Tabletop***
B = Minimum clearance (in inches) to ***Back of unit.***
C = Minimum clearance (in inches) to ***Sides of unit.***

CLEARANCES FOR OVERHEADS						
	HIGH WATTAGE			LOW WATTAGE		
MODEL	A	B	C	A	B	C
FDD/FDDL-18	28	12	2	24	12	2
FDD/FDDL-24	28	12	2	24	12	2
FDD/FDDL-30	28	12	2	24	12	2
FDD/FDDL-36	28	12	2	24	12	2
FDD/FDDL-42	28	12	2	24	12	2
FDD/FDDL-48	28	12	2	24	12	2
FDD/FDDL-54	28	12	2	24	12	2
FDD/FDDL-60	28	12	2	24	12	2
FDD/FDDL-66	28	12	2	24	12	2
FDD/FDDL-72	28	12	2	24	12	2
FDD/FDDL-84	N/A	N/A	N/A	24	12	2
FDD/FDDL-96	N/A	N/A	N/A	24	12	2
FD/FDL-18	16	2	2	16	2	2
FD/FDL-24	16	2	2	16	2	2
FD/FDL-30	16	2	2	16	2	2
FD/FDL-36	16	2	2	16	2	2
FD/FDL-42	16	2	2	16	2	2
FD/FDL-48	16	2	2	16	2	2
FD/FDL-54	16	2	2	16	2	2
FD/FDL-60	16	2	2	16	2	2
FD/FDL-66	16	2	2	16	2	2
FD/FDL-72	16	2	2	16	2	2
FD/FDL-84	N/A	N/A	N/A	16	2	2
FD/FDL-96	N/A	N/A	N/A	16	2	2

C. Consult foodwarmer rating label for model designation and correct operating voltage and amperage.
D. Ceiling mounting brackets are provided with each foodwarmer for chain or shelf mounting. Remove brackets form packaging and screws from ends of foodwarmer to attach brackets. Use four #10 screws or studs with locknuts for shelf mounting. For chain mounting, use #14 jack chain and “S” hooks.
E. Remote switches are recommended. Longer switch life will result from cooler switch mounting locations. Optional stainless steel remote toggle and infinite switch box kits are available. Installation of remote switch box by service personnel requires 7/8" conduit, 1/4" push-on terminals, and no. 14 AWG copper wire suitable for at lest 90ºC. Mount remote box to flat surface with two #10 screws or studs with locknuts. All wires marked as shown on wiring diagram.
F. Optional tubular stands are available for permanently mounting foodwarmers to non-combustible countertops.
G. Optional portable legs are available for foodwarmers for use over non-combustible countertops.
H. Installation of cord sets by service personnel should utilize the strain relief, grounding stud, and porcelain wire nuts provided with foodwarmers.
I. If unit is supplied with a power cord, the appliance must be positioned so that the plug is accessible.

NOTE: TO AVOID BURNING OR CHARRING OF MATERIALS IN THE SURFACE BELOW THE FOODWARMER USE ONLY ABOVE AN ALL-METAL STRUCTURE SUCH AS A TABLE OR COUNTERTOP. SEE MINIMUM CLEARANCE CHART ABOVE.

REMOTE SWITCHES ARE RECOMMENDED FOR UNDER SHELF MOUNTING. LONGER SWITCH LIFE WILL RESULT FROM COOLER SWITCH MOUNTING LOCATIONS.

General Operation Instructions:

1. All foodservice equipment should be operated by trained personnel.
2. Do not allow your customers to come in contact with any surface labeled “CAUTION HOT”.
3. Never hold food below 150°F (66°C).

Warranty Information:

Reliability Backed By APW Wyott’s Warranty:
All APW Wyott Overhead Warmers are backed by a one year parts and labor warranty, including On-Site Service calls within 50 miles of authorized service technicians.

Service Information:

Service Hotline (800) 733-2203

2. SAFETY INFORMATION

APW Wyott Overhead Warmers are designed, built and sold for commercial use and should be operated by trained personnel only. Clearly post all CAUTIONS, WARNINGS and OPERATING INSTRUCTIONS near each unit to insure proper operation and to reduce the chance of personal injury and/or equipment damage.

Always disconnect power before servicing the Overhead Warmer. Surfaces will remain hot after power has been turned off. Allow unit to cool before cleaning or servicing. Never clean the Overhead Warmer by immersing it in water. The Overhead Warmer is not protected against water jets; DO NOT CLEAN OVERHEAD WARMER WITH A WATER JET. Always clean equipment before first use.

3. SPECIFICATIONS

Electrical:

A. Single-phase operation at 120, 208, 230, and 240 volts. (See label on each unit).
B. Field-wired units provided with 7/8" conduit hole, 6" long leads, and porcelain wire nuts. For supply connections, use minimum no. 14 AWG copper wires suitable for at least 90ºC.
C. U.S. cord-connected units provided with following plug configuration:
   1. 120 volt up to 1440 watts = NEMA 5-15P; 120 volt up to 1920 watts = NEMA 5-20P
   2. 208 volt up to 2496 watts = NEMA 6-15P; 208 volt up to 3328 watts = NEMA 6-20P
   3. 240 volt up to 2880 watts = NEMA 6-15P; 240 volt up to 3840 watts = NEMA 6-20P
D European cord-connected units provided with following plug configuration:
   1. Continental Europe230 volt up to 3600 watts = Schuko CEE7/7
   2. UK230 volt up to 2930 watts = Bs1363

If the supply cord is damaged, an authorized service agent or a similarly qualified person must replace it to avoid a hazard or voiding the warranty.

WARNING: *ELECTRICAL SHOCK HAZARD. FAILURE TO FOLLOW THE INSTRUCTIONS IN THIS MANUAL COULD RESULT IN SERIOUS INJURY OR DEATH.*

- Electrical Ground is required on this appliance.
- Do not modify the power supply cord plug. If it does not fit into the outlet, have the proper outlet installed by a qualified electrician
- Do not use an extension cord with this appliance.
- Check with a qualified electrician if you are unsure as to whether the appliance is properly grounded.

Overall Dimensions:

FD MODELS

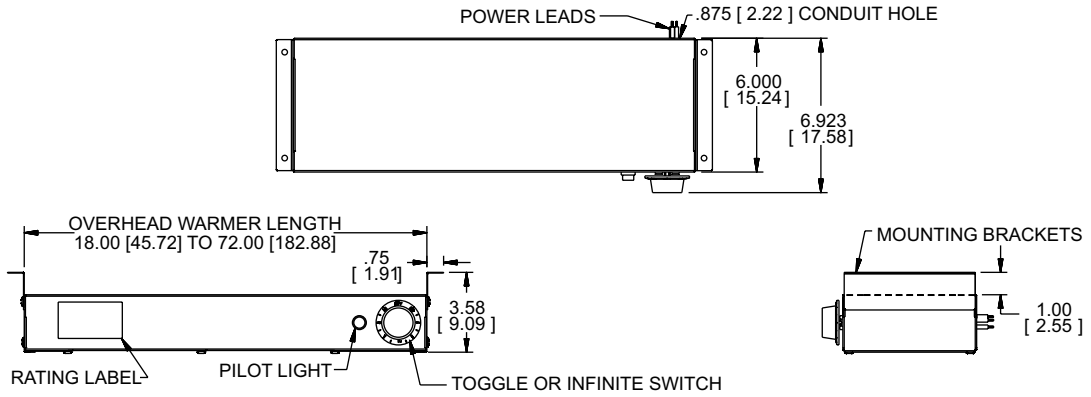

FDL MODELS

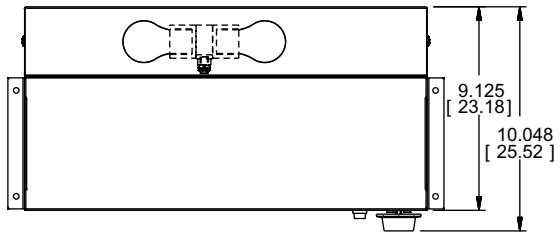

FDD, FDDL MODELS

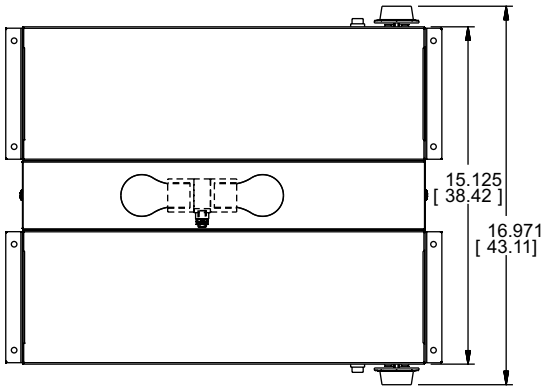

TUBULAR STAND KIT

FOR INSTALLATION ABOVE NONCOMBUSTIBLE SURFACE

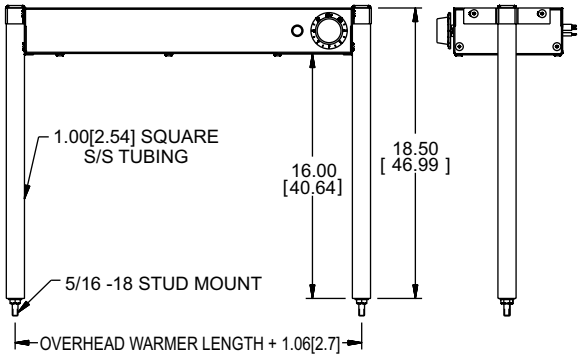

PORTABLE LEG KIT

FOR USE ABOVE NONCOMBUSTIBLE SURFACE

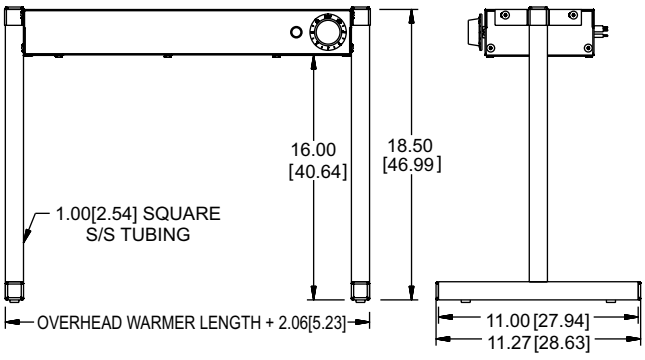

4. Operation

A. All foodservice equipment should be operated by trained personnel.
B. Do not allow your customers to come in contact with any surface labeled “CAUTION HOT”.
C. Switch on unit. Place precooked product under heat source. Maximum heat coverage equivalent to unit length.
D. Never hold food below 150ºF.

5. Cleaning

General Cleaning Instructions:

A. Never clean any electrical unit by immersing it in water. Turn off before surface cleaning.
B. Never clean any electrical unit using water jets.
C. Disconnect power before cleaning or servicing units. All service should be performed by an APW authorized service agency.
D. Clean unit daily. Use warm, soapy water. Mild cleansers and non-abrasive pads may be used to remove baked-on food.

6. Troubleshooting

A. Always ask and check:
   1. Is the unit connected to a live power source?
   2. Check the circuit breaker.
   3. Is the power switch on and pilot light illuminating?
   4. Check the rating label. Is the unit operating on proper voltage?
B. If the above checks out, and problems still exist, call an APW Wyott authorized service agency.
C. All service should be performed by an APW Wyott authorized service agency.

7. WIRING DIAGRAMS

FD18-72 WIRING DIAGRAM

REMOTE CONFIGURATION

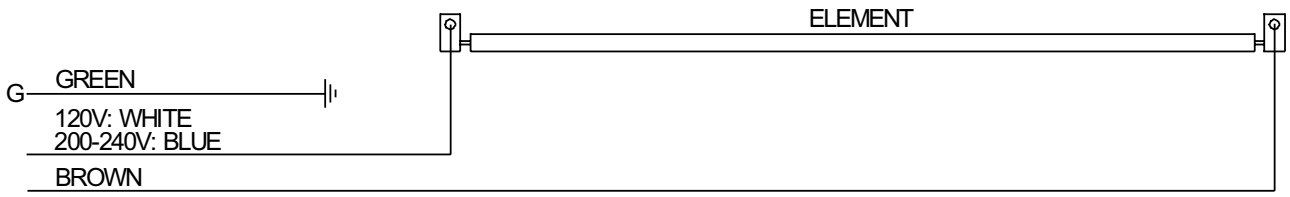

INFINITE CONTROL CONFIGURATION

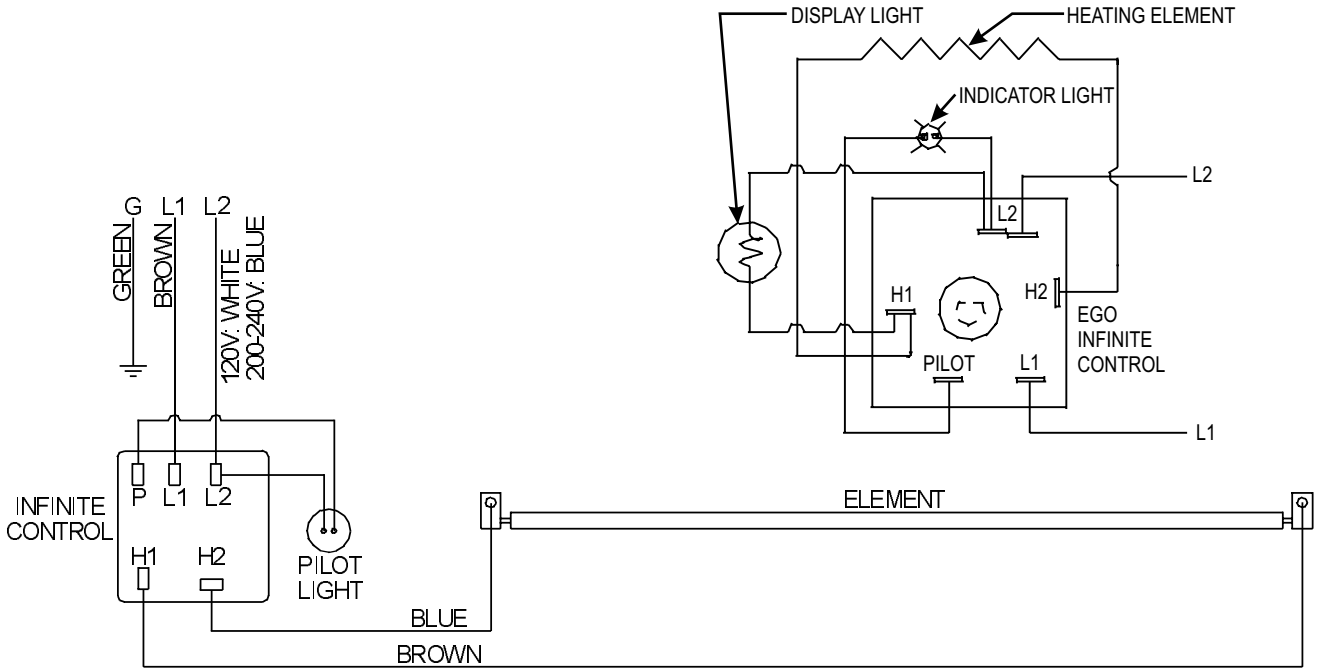

TOGGLE SWITCH CONFIGURATION

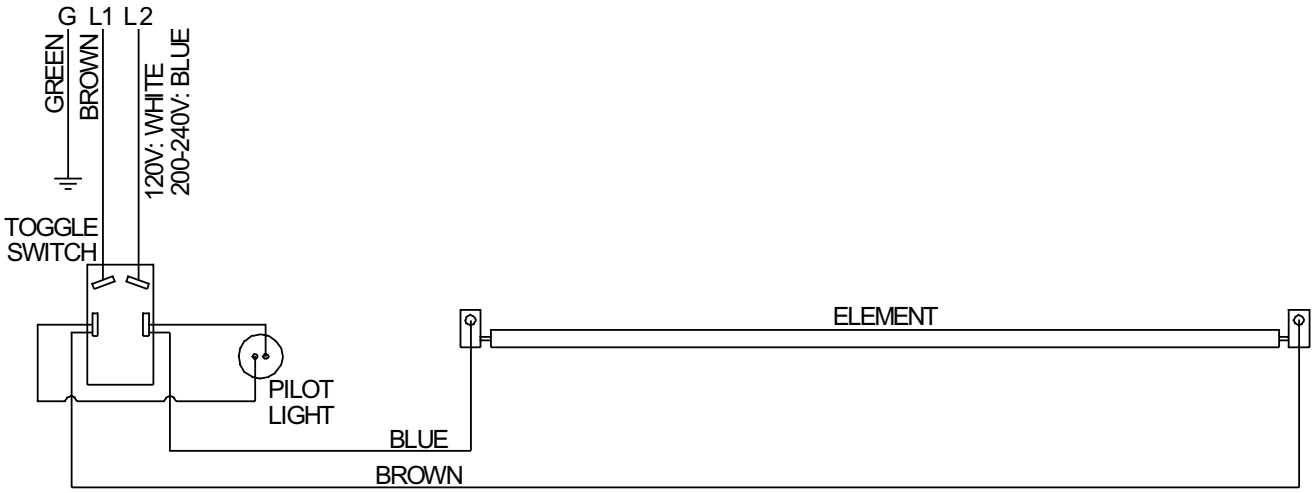

67177 REV-11/2001

FDL18-72 WIRING DIAGRAM

REMOTE CONFIGURATION

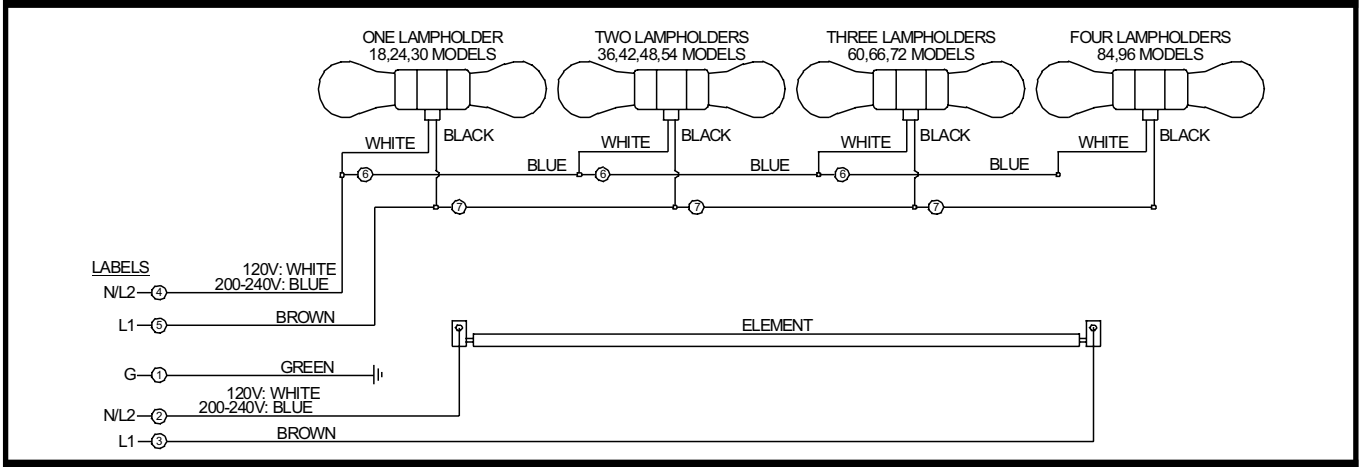

INFINITE CONTROL CONFIGURATION

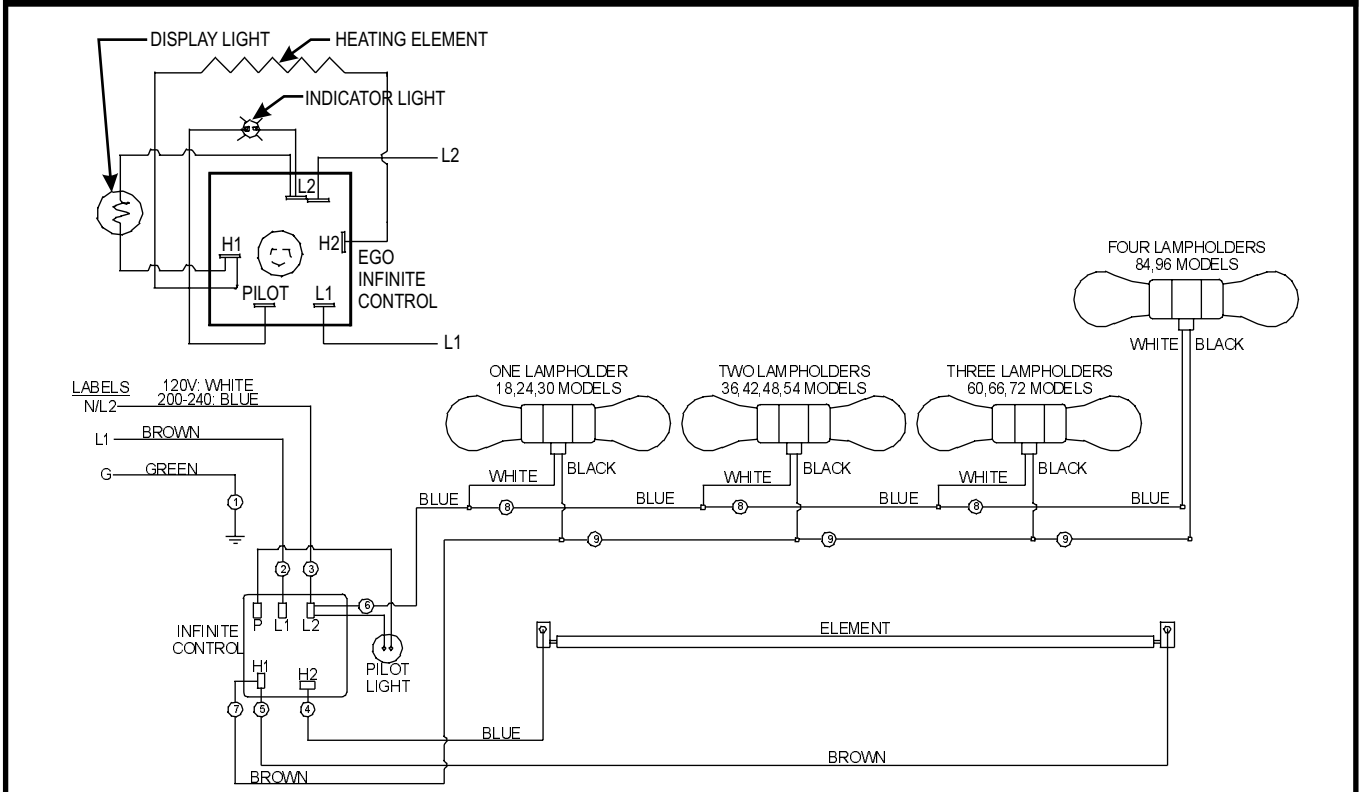

TOGGLE SWITCH CONFIGURATION

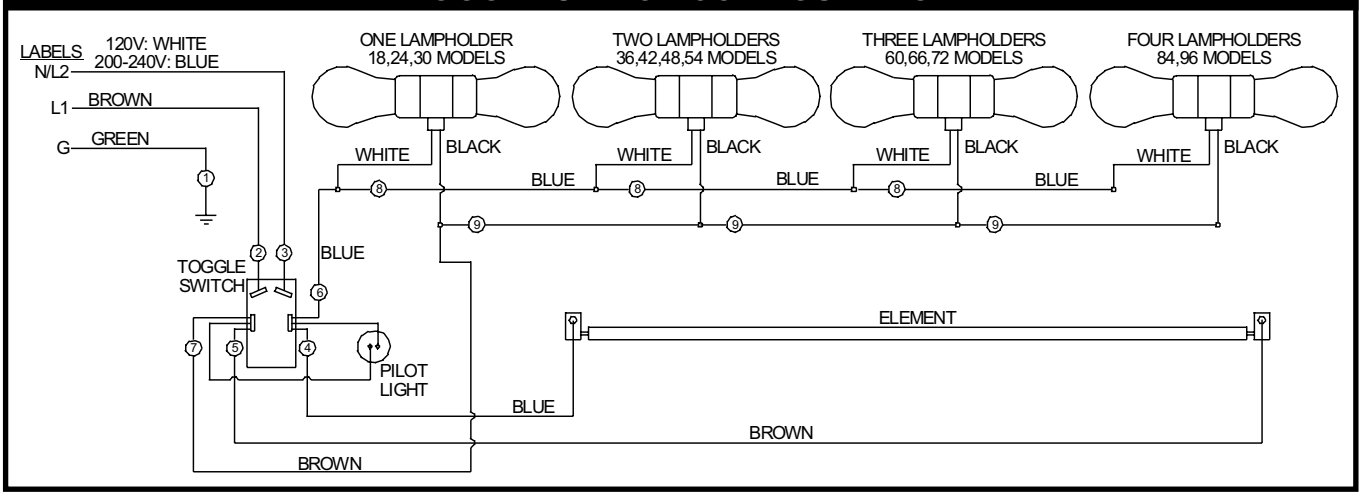

FDD18-72 WIRING DIAGRAM

REMOTE CONFIGURATION

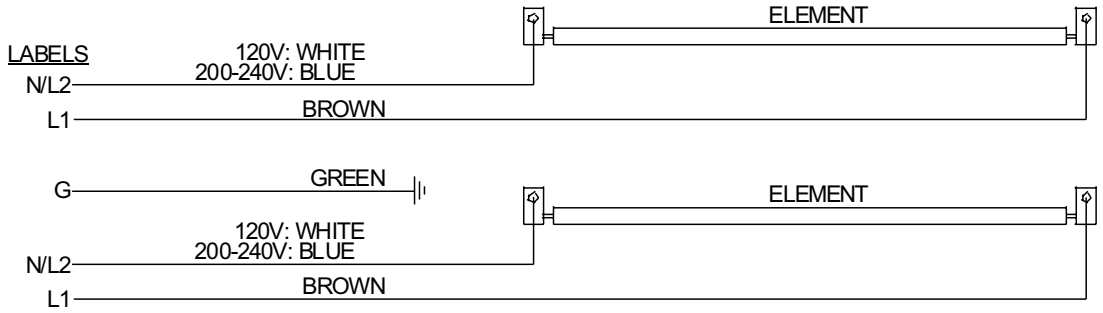

INFINITE CONTROL CONFIGURATION

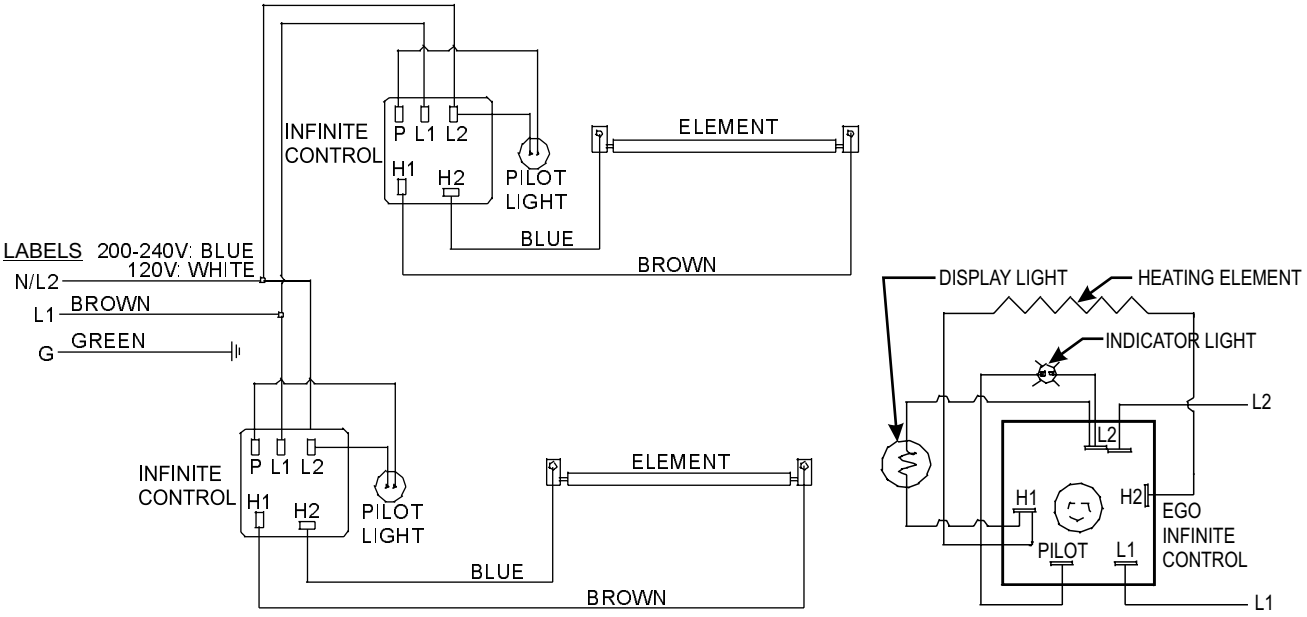

TOGGLE SWITCH CONFIGURATION

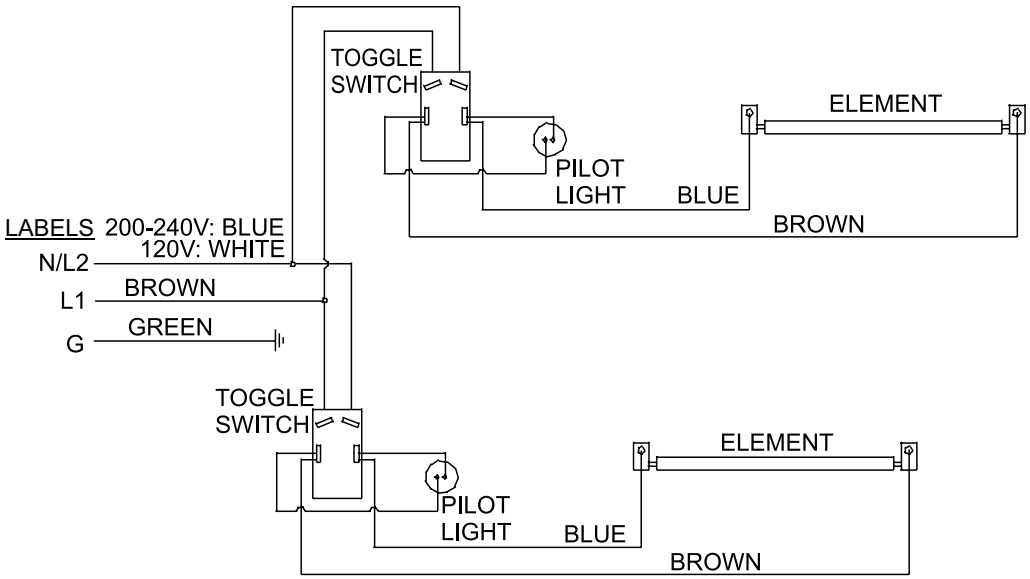

FDDL18-72 WIRING DIAGRAM

REMOTE CONFIGURATION

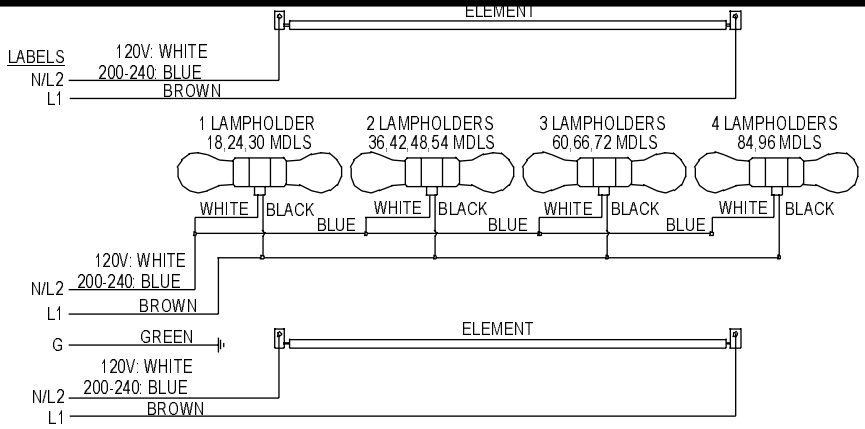

INFINITE CONTROL CONFIGURATION

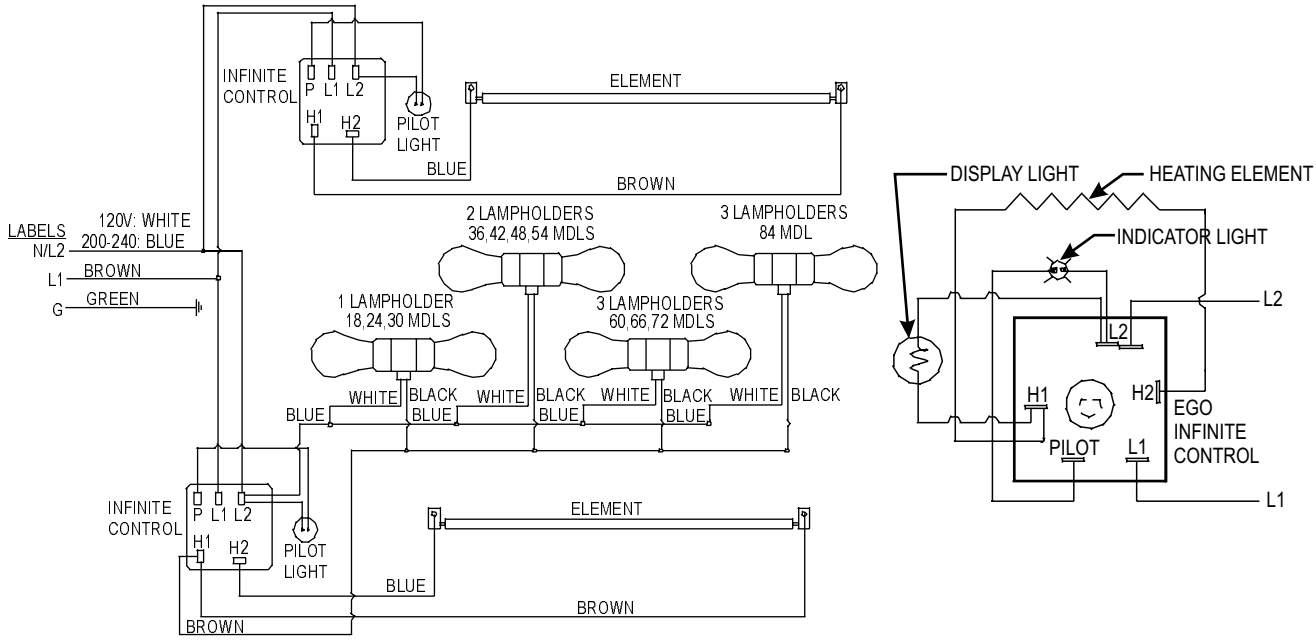

TOGGLE SWITCH CONFIGURATION

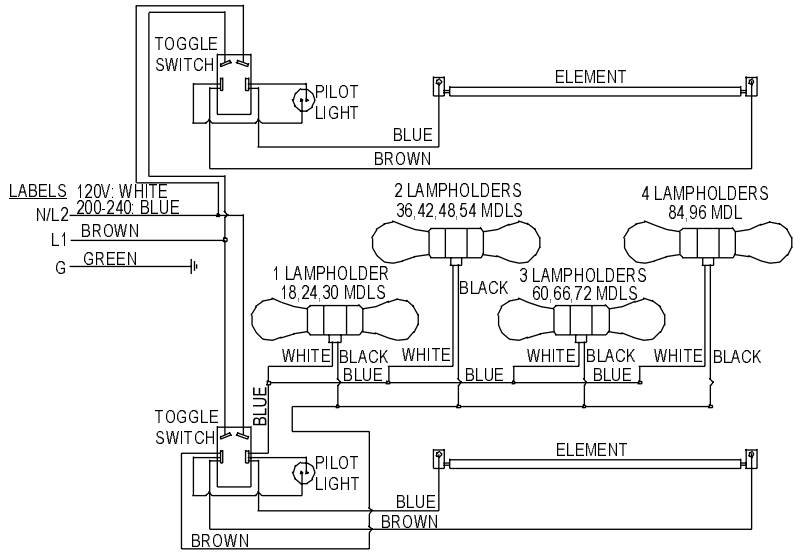

67179 REV-7/00

8. PARTS LISTS

MODEL "FD" OVERHEAD WARMERS REPLACEMENT PARTS CATALOG

FD Followed by 18, 24, 30, 36, 42, 48, 54, 60, 66, 72, 84, or 96

MODEL	VOLTS	HIGH WATTAGE	LOW WATTAGE
FD18	120	400	250
	208	400	250
	230	368	294
	240	400	320
FD24	120	575	350
	208	575	350
	230	529	322
	240	575	350
FD30	120	760	450
	208	760	450
	230	698	414
	240	760	450
FD36	120	920	575
	208	920	575
	230	845	529
	240	920	575
FD42	120	1100	675
	208	1100	675
	230	1011	620
	240	1100	675
FD48	120	1265	800
	208	1265	800
	230	1162	735
	240	1265	800
FD54	120	1425	925
	208	1425	925
	230	1309	850
	240	1425	925
FD60	120	1600	1050
	208	1610	1050
	230	1479	965
	240	1610	1050
FD66	208	1800	1160
	230	1654	1066
	240	1800	1160
FD72	208	1980	1275
	230	1819	1171
	240	1980	1275
FD84	208	---	2050
	230	---	1948
	240	---	2050
FD96	208	---	2400
	230	---	2280
	240	---	2400

FOR COMPLETE STYLE AND OPTION DESIGNATION:
ADD ONE SUFFIX FROM EACH FOLLOWING CATEGORY AFTER THE MODEL AND LENGTH

WATTAGE	**VOLTAGE**	**SWITCH**
H=HIGH WATTAGE	1=120V	I=INFINITE CONTROL
L=LOW WATTAGE	2=208V	T=TOGGLE SWITCH
	3=240V	R=REMOTE CONTROL/SWITCH

EXAMPLE: A WARMER, 48" LONG, HIGH WATTAGE, 208V, WITH INFINITE CONTROL = OH48H2I

FD18 THRU 96 OVERHEAD WARMERS

ITEM	PART NUMBER	DESCRIPTION
1	76835	HOUSING FD18
	76836	HOUSING FD24
	76837	HOUSING FD30
	76838	HOUSING FD36
	76839	HOUSING FD42
	76840	HOUSING FD48
	76841	HOUSING FD54
	76842	HOUSING FD60
	76843	HOUSING FD66
	76844	HOUSING FD72
	77075	HOUSING FD84
	77076	HOUSING FD96
2	67005	TOGGLE SWITCH
3	76100	SWITCH GUARD
4	55564-EGO	INFINITE CONTROL 120V
	87054-EGO	INFINITE CONTROL 208V
	87053-EGO	INFINITE CONTROL 240V
5	55825	KNOB
6	76805	REFLECTOR FD18
	76806	REFLECTOR FD24
	76807	REFLECTOR FD30
	76808	REFLECTOR FD36
	76809	REFLECTOR FD42
	76810	REFLECTOR FD48
	76811	REFLECTOR FD54
	76812	REFLECTOR FD60
	76813	REFLECTOR FD66
	76814	REFLECTOR FD72
	77060	REFLECTOR FD84
	77061	REFLECTOR FD96
7	75801	ELEMENT FD18 120V 400W
	75833	ELEMENT FD18 208V 400W
	75830	ELEMENT FD18 240V 400W
	75851	ELEMENT FD18 120V 250W
	75873	ELEMENT FD18 208V 250W
	75874	ELEMENT FD18 240V 320W
	75461	ELEMENT FD24 120V 575W
	75813	ELEMENT FD24 208V 575W
	75814	ELEMENT FD24 240V 575W
	75852	ELEMENT FD24 120V 350W
	75875	ELEMENT FD24 208V 350W
	75876	ELEMENT FD24 240V 350W
	75802	ELEMENT FD30 120V 760W
	75820	ELEMENT FD30 208V 760W
	75831	ELEMENT FD30 240V 760W
	75853	ELEMENT FD30 120V 450W
	75877	ELEMENT FD30 208V 450W
	75878	ELEMENT FD30 240V 450W
	75803	ELEMENT FD36 120V 920W
	75804	ELEMENT FD36 208V 920W
	75805	ELEMENT FD36 240V 920W
	75854	ELEMENT FD36 120V 575W
	75855	ELEMENT FD36 208V 575W
	75856	ELEMENT FD36 240V 575W
	75819	ELEMENT FD42 120V 1100W
	75821	ELEMENT FD42 208V 1100W
	75822	ELEMENT FD42 240V 1100W
	75857	ELEMENT FD42 120V 675W
	75858	ELEMENT FD42 208V 675W
	75859	ELEMENT FD42 240V 675W
	75806	ELEMENT FD48 120V 1265W
	75807	ELEMENT FD48 208V 1265W
	75808	ELEMENT FD48 240V 1265W
	75860	ELEMENT FD48 120V 800W
	75861	ELEMENT FD48 208V 800W
	75862	ELEMENT FD48 240V 800W
	75823	ELEMENT FD54 120V 1425W
	75824	ELEMENT FD54 208V 1425W
	75825	ELEMENT FD54 240V 1425W
	75863	ELEMENT FD54 120V 925W
	75864	ELEMENT FD54 208V 925W
	75865	ELEMENT FD54 240V 925W
	75817	ELEMENT FD60 120V 1600W
	75809	ELEMENT FD60 208V 1610W
	75810	ELEMENT FD60 240V 1610W
	75866	ELEMENT FD60 120V 1050W
	75867	ELEMENT FD60 208V 1050W
	75868	ELEMENT FD60 240V 1050W
	75826	ELEMENT FD66 208V 1800W
	75827	ELEMENT FD66 240V 1800W
	75869	ELEMENT FD66 208V 1160W
	75870	ELEMENT FD66 240V 1160W
	75811	ELEMENT FD72 208V 1980W
	75812	ELEMENT FD72 240V 1980W
	75871	ELEMENT FD72 208V 1275W
	75872	ELEMENT FD72 240V 1275W
	75879	ELEMENT FD84 208V 2050W
	75880	ELEMENT FD84 240V 2050W
	75881	ELEMENT FD96 208V 2400W
	75882	ELEMENT FD96 240V 2400W
8	76801	COVER LARGE RH
9	76802	COVER SMALL
10	76106	ELEMENT GUARD
11	76955	MOUNTING BRACKET
12	67003	ON-OFF PLATE
13	56530	PILOT LIGHT
14		WIRE SET: SPECIFY MODEL NO.
15	76189	INSULATION FD18 THRU FD72
16	76190	INSULATION FD18
	76191	INSULATION FD24
	76192	INSULATION FD30
	76193	INSULATION FD36
	76194	INSULATION FD42
	76195	INSULATION FD48
	76196	INSULATION FD54
	76197	INSULATION FD60
	76198	INSULATION FD66
	76199	INSULATION FD72
17	76803	END PLATE
18	76804	ELEMENT SUPPORT
		PARTS NOT SHOWN
	58004	SELF RETAINING FASTENER
	89087	8-32 X 3/16 MACHINE SCREW
	88993	10-32 X 3/8 NYLOCK MACHINE
	88909	8-18 X 3/8 SHEET METAL (AB)
	89059	#10 EXTERNAL LOCKWASHER
	88961	10-24 HEX NUT GREEN-GROUND

FD-18 Thru FD-96 EXPLODED VIEW

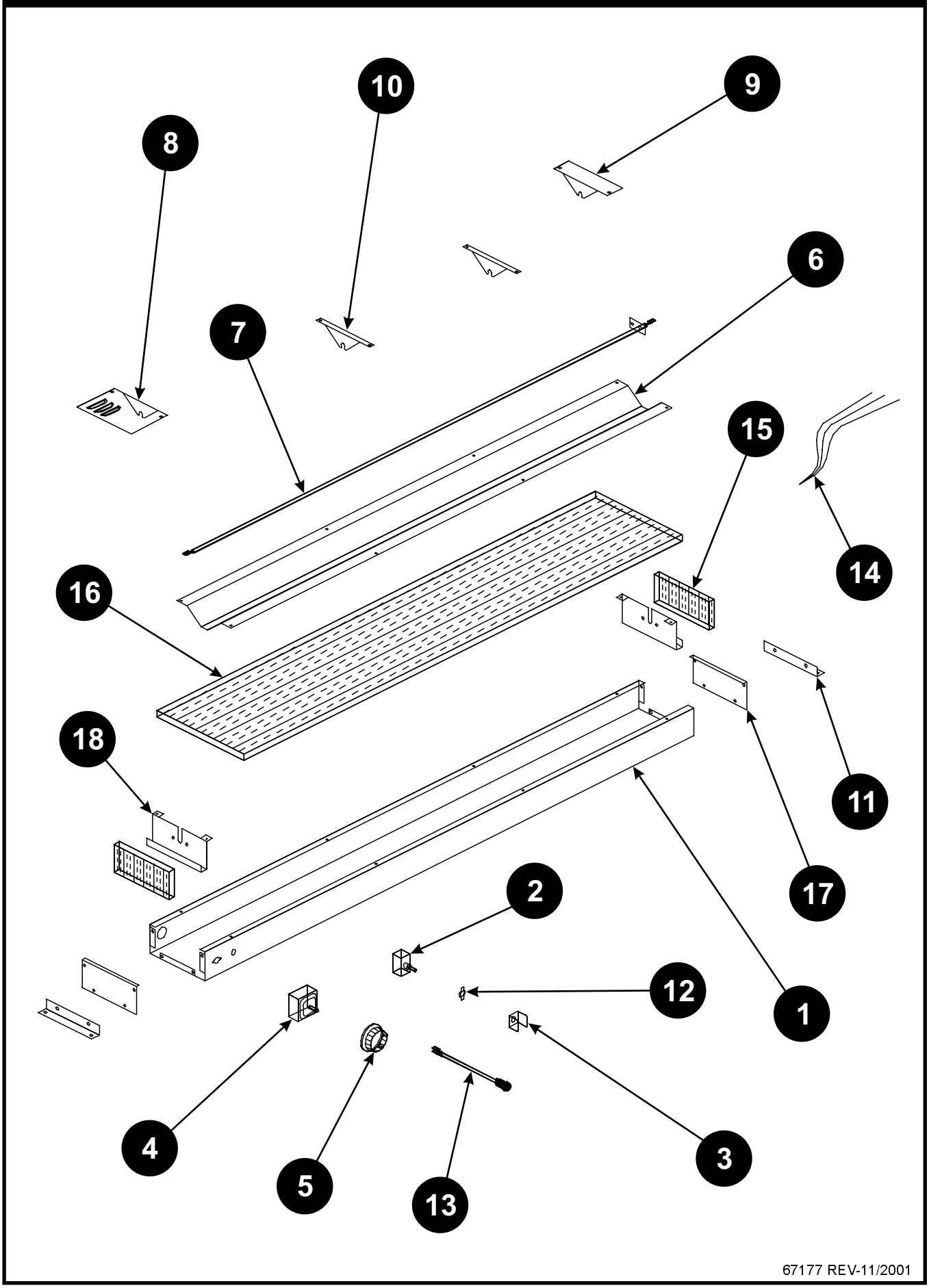

MODEL "FDL" LIGHTED OVERHEAD WARMERS REPLACEMENT PARTS CATALOG

FDL Followed by 18, 24, 30, 36, 42, 48, 54, 60, 66, 72, 84, or 96

MODEL	VOLTS	HIGH WATTAGE	LOW WATTAGE
FDL18	120	480	330
	208	462	312
	230	441	368
	240	480	400
FDL24	120	655	430
	208	637	412
	230	602	395
	240	655	430
FDL30	120	840	530
	208	822	512
	230	772	487
	240	840	530
FDL36	120	1080	735
	208	1044	699
	230	992	676
	240	1080	735
FDL42	120	1260	835
	208	1224	799
	230	1158	767
	240	1260	835
FDL48	120	1425	960
	208	1389	924
	230	1309	882
	240	1425	960
FDL54	120	1585	1085
	208	1549	1049
	230	1456	997
	240	1585	1085
FDL60	120	1840	1290
	208	1796	1236
	230	1700	1185
	240	1850	1290
FDL66	208	1986	1346
	230	1874	1286
	240	2040	1400
FDL72	208	2166	1461
	230	2039	1392
	240	2220	1515
FDL84	208	---	2298
	230	---	2177
	240	---	2370
FDL96	208	---	2640
	230	---	2498
	240	---	2720

FOR COMPLETE STYLE AND OPTION DESIGNATION:
ADD ONE SUFFIX FROM EACH FOLLOWING CATEGORY AFTER THE MODEL AND LENGTH

WATTAGE	**VOLTAGE**	**SWITCH**
H=HIGH WATTAGE	1=120V	I=INFINITE CONTROL
L=LOW WATTAGE	2=208V	T=TOGGLE SWITCH
	3=240V	R=REMOTE CONTROL/SWITCH

EXAMPLE:
A LIGHTED WARMER, 48" LONG, HIGH WATTAGE, 208V, WITH INFINITE CONTROL = OHL48H2I

FDL18 THRU 96 LIGHTED OVERHEAD WARMERS

ITEM	PART NUMBER	DESCRIPTION
1	76845	HOUSING FDL18
	76846	HOUSING FDL24
	76847	HOUSING FDL30
	76848	HOUSING FDL36
	76849	HOUSING FDL42
	76850	HOUSING FDL48
	76851	HOUSING FDL54
	76852	HOUSING FDL60
	76853	HOUSING FDL66
	76854	HOUSING FDL72
	77080	HOUSING FDL84
	77081	HOUSING FDL96
2	67004	TOGGLE SWITCH
3	76100	SWITCH GUARD
4	55564-EGO	INFINITE CONTROL 120V
	87054-EGO	INFINITE CONTROL 208V
	87053-EGO	INFINITE CONTROL 240V
5	55825	KNOB
6	76805	REFLECTOR FD18
	76806	REFLECTOR FD24
	76807	REFLECTOR FD30
	76808	REFLECTOR FD36
	76809	REFLECTOR FD42
	76810	REFLECTOR FD48
	76811	REFLECTOR FD54
	76812	REFLECTOR FD60
	76813	REFLECTOR FD66
	76814	REFLECTOR FD72
	77060	REFLECTOR FD84
	77061	REFLECTOR FD96
7	75801	ELEMENT FD18 120V 400W
	75833	ELEMENT FD18 208V 400W
	75830	ELEMENT FD18 240V 400W
	75851	ELEMENT FD18 120V 250W
	75873	ELEMENT FD18 208V 250W
	75874	ELEMENT FD18 240V 320W
	75461	ELEMENT FD24 120V 575W
	75813	ELEMENT FD24 208V 575W
	75814	ELEMENT FD24 240V 575W
	75852	ELEMENT FD24 120V 350W
	75875	ELEMENT FD24 208V 350W
	75876	ELEMENT FD24 240V 350W
	75802	ELEMENT FD30 120V 760W
	75820	ELEMENT FD30 208V 760W
	75831	ELEMENT FD30 240V 760W
	75853	ELEMENT FD30 120V 450W
	75877	ELEMENT FD30 208V 450W
	75878	ELEMENT FD30 240V 450W
	75803	ELEMENT FD36 120V 920W
	75804	ELEMENT FD36 208V 920W
	75805	ELEMENT FD36 240V 920W
	75854	ELEMENT FD36 120V 575W
	75855	ELEMENT FD36 208V 575W
	75856	ELEMENT FD36 240V 575W
	75819	ELEMENT FD42 120V 1100W
	75821	ELEMENT FD42 208V 1100W
	75822	ELEMENT FD42 240V 1100W
	75857	ELEMENT FD42 120V 675W
	75858	ELEMENT FD42 208V 675W
	75859	ELEMENT FD42 240V 675W
	75806	ELEMENT FD48 120V 1265W
	75807	ELEMENT FD48 208V 1265W
	75808	ELEMENT FD48 240V 1265W
	75860	ELEMENT FD48 120V 800W
	75861	ELEMENT FD48 208V 800W
	75862	ELEMENT FD48 240V 800W
	75823	ELEMENT FD54 120V 1425W
	75824	ELEMENT FD54 208V 1425W
	75825	ELEMENT FD54 240V 1425W
	75863	ELEMENT FD54 120V 925W
	75864	ELEMENT FD54 208V 925W
	75865	ELEMENT FD54 240V 925W
	75817	ELEMENT FD60 120V 1600W
	75809	ELEMENT FD60 208V 1610W
	75810	ELEMENT FD60 240V 1610W
	75866	ELEMENT FD60 120V 1050W
	75867	ELEMENT FD60 208V 1050W
	75868	ELEMENT FD60 240V 1050W
	75826	ELEMENT FD66 208V 1800W
	75827	ELEMENT FD66 240V 1800W
	75869	ELEMENT FD66 208V 1160W
	75870	ELEMENT FD66 240V 1160W
	75811	ELEMENT FD72 208V 1980W
	75812	ELEMENT FD72 240V 1980W
	75871	ELEMENT FD72 208V 1275W
	75872	ELEMENT FD72 240V 1275W
	75879	ELEMENT FD84 208V 2050W
	75880	ELEMENT FD84 240V 2050W
	75881	ELEMENT FD96 208V 2400W
	75882	ELEMENT FD96 240V 2400W
8	76801	COVER LARGE
9	76802	COVER SMALL
10	76106	ELEMENT GUARD
11	76955	MOUNTING BRACKET
12	67003	ON-OFF PLATE
13	56530	PILOT LIGHT
14		WIRE SET: SPECIFY MODEL NO.
15	76159	END COVER RH DL
16	89182	SNAP-IN BUSHING
17	76189	INSULATION FD18 THRU FD72
18	76190	INSULATION FD18
	76191	INSULATION FD24
	76192	INSULATION FD30
	76193	INSULATION FD36
	76194	INSULATION FD42
	76195	INSULATION FD48
	76196	INSULATION FD54
	76197	INSULATION FD60
	76198	INSULATION FD66
	76199	INSULATION FD72
19	76211	LIGHT SUPPORT DL18
	76212	LIGHT SUPPORT DL24
	76213	LIGHT SUPPORT DL30
	76214	LIGHT SUPPORT DL36
	76215	LIGHT SUPPORT DL42
	76216	LIGHT SUPPORT DL48
	76217	LIGHT SUPPORT DL54
	76218	LIGHT SUPPORT DL60
	76219	LIGHT SUPPORT DL66
	76220	LIGHT SUPPORT DL72
	77015	LIGHT SUPPORT DL84
	77016	LIGHT SUPPORT DL96
20	75917	TWIN LAMPHOLDER
21	75916	COATED LIGHT BULB 120V 40W
	76874	COATED LIGHT BULB 240V 40W
22	76803	END PLATE
23	76804	ELEMENT SUPPORT
		PARTS NOT SHOWN
	58004	SELF RETAINING FASTENER
	89087	8-32 X 3/16 MACHINE SCREW
	88993	10-32 X 3/8 NYLOCK MACHINE
	88909	8-18 X 3/8 SHEET METAL (AB)
	89059	#10 EXTERNAL LOCKWASHER
	88961	10-24 HEX NUT GREEN-GROUND

FDL-18 Thru FDL-96 EXPLODED VIEW

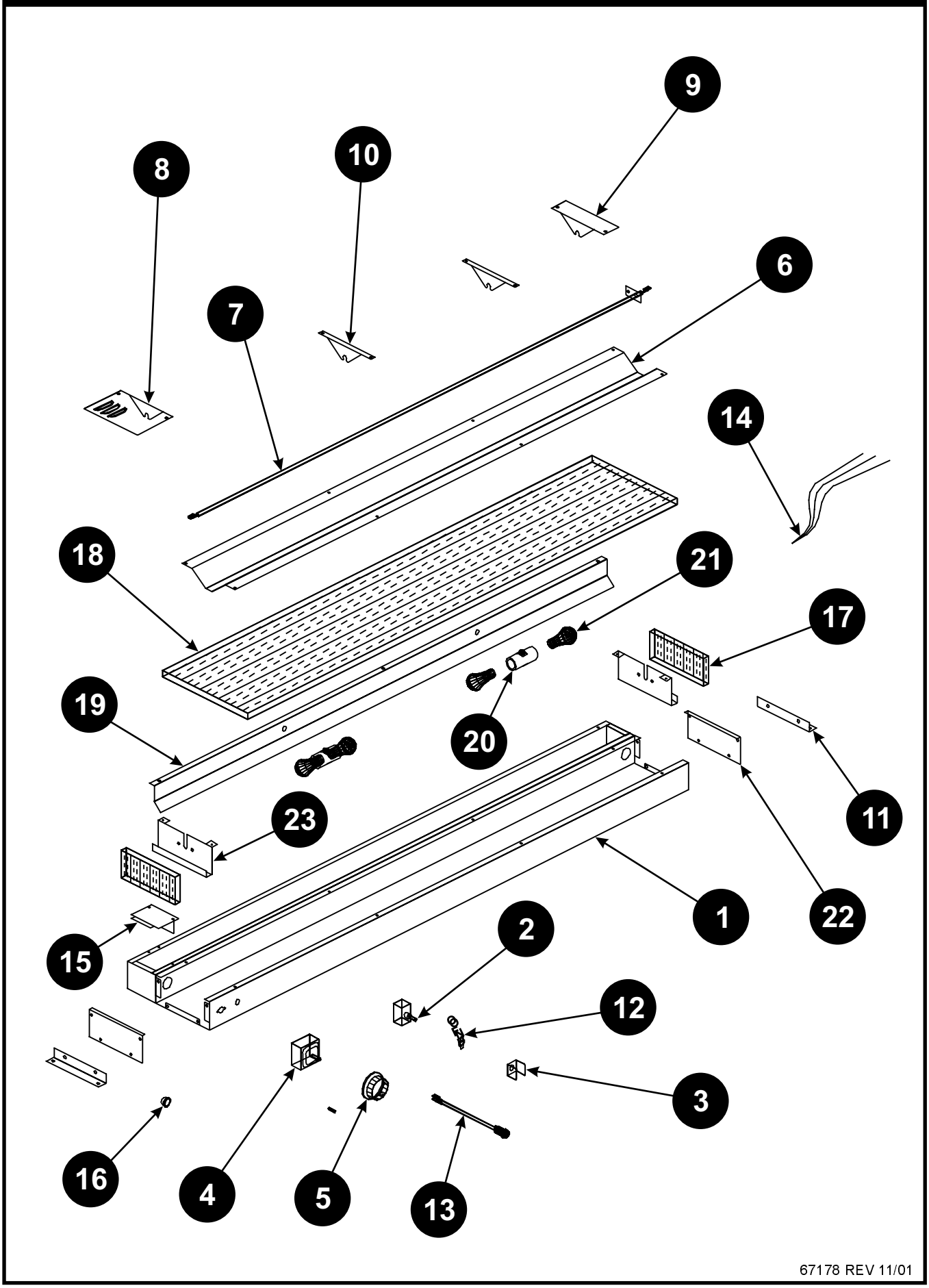

MODEL "FDD" or "FDDL" DUAL OVERHEAD WARMERS REPLACEMENT PARTS CATALOG

FDD or FDDL Followed by 18, 24, 30, 36, 42, 48, 54, 60, 66, 72, 84, or 96

	HIGH WATTAGE UNITS		LOW WATTAGE UNITS	
LENGTH	**FDD SERIES**	**FDDL SERIES**	**FDD SERIES**	**FDDL SERIES**
18	120V 800W	120V 880W	120V 500W	120V 580W
18	208V 800W	208V 862W	208V 500W	208V 562W
18	230V 735W	230V 809W	230V 588W	230V 662W
18	240V 800W	240V 880W	240V 640W	240V 720W
24	120V 1150W	120V 1230W	120V 700W	120V 780W
24	208V 1150W	208V 1212W	208V 700W	208V 762W
24	230V 1057W	230V 1130W	230V 643W	230V 717W
24	240V 1150W	240V 1230W	240V 700W	240V 780W
30	120V 1520W	120V 1600W	120V 900W	120V 980W
30	208V 1520W	208V 1582W	208V 900W	208V 962W
30	230V 1396W	230V 1470W	230V 827W	230V 901W
30	240V 1520W	240V 1600W	240V 900W	240V 980W
36	120V 1840W	120V 2000W	120V 1150W	120V 1310W
36	208V 1840W	208V 1964W	208V 1150W	208V 1274W
36	230V 1690W	230V 1837W	230V 1057W	230V 1204W
36	240V 1840W	240V 2000W	240V 1150W	240V 1310W
42	120V 2200W	120V 2360W	120V 1350W	120V 1510W
42	208V 2200W	208V 2324W	208V 1350W	208V 1474W
42	230V 2021W	230V 2168W	230V 1240W	230V 1387W
42	240V 2200W	240V 2360W	240V 1350W	240V 1510W
48	120V 2530W	120V 2690W	120V 1600W	120V 1760W
48	208V 2530W	208V 2654W	208V 1600W	208V 1724W
48	230V 2324W	230V 2471W	230V 1470W	230V 1617W
48	240V 2530W	240V 2690W	240V 1600W	240V 1760W
54	120V 2850W	120V 3010W	120V 1850W	120V 2010W
54	208V 2850W	208V 2974W	208V 1850W	208V 1974W
54	230V 2618W	230V 2765W	230V 1700W	230V 1846W
54	240V 2850W	240V 3010W	240V 1850W	240V 2010W
60	120V 3200W	120V 3440W	120V 2100W	120V 2340W
60	208V 3220W	208V 3406W	208V 2100W	208V 2286W
60	230V 2958W	230V 3178W	230V 1929W	230V 2150W
60	240V 3220W	240V 3460W	240V 2100W	240V 2340W
66	208V 3600W	208V 3786W	208V 2320W	208V 2506W
66	230V 3307W	230V 3527W	230V 2131W	230V 2352W
66	240V 3600W	240V 3840W	240V 2320W	240V 2560W
72	208V 3960W	208V 4146W	208V 2550W	208V 2736W
72	230V 3637W	230V 3858W	230V 2342W	230V 2563W
72	240V 3960W	240V 4200W	240V 2550W	240V 2790W
84	---	---	208V 4100W	208V 4348W
84	---	---	230V 3765W	230V 4059W
84	---	---	240V 4100W	240V 4420W
96	---	---	208V 4800W	208V 5040W
96	---	---	230V 4408W	230V 4702W
96	---	---	240V 4800W	240V 5120W

FOR COMPLETE STYLE AND OPTION DESIGNATION:
ADD ONE SUFFIX FROM EACH FOLLOWING CATEGORY AFTER THE MODEL AND LENGTH

WATTAGE	**VOLTAGE**	**SWITCH**
H=HIGH WATTAGE	1=120V	I=INFINITE CONTROL
L=LOW WATTAGE	2=208V	T=TOGGLE SWITCH
	3=240V	R=REMOTE CONTROL/SWITCH

EXAMPLE:
A LIGHTED DUAL WARMER, 48" LONG, HIGH WATTAGE, 208V, WITH TOGGLE SWITCH = OHDL46H2T

FDD or FDDL18 THRU 96 DUAL OVERHEAD WARMERS

ITEM	PART NUMBER	DESCRIPTION
1	76855	HOUSING FDD/FDDL18
	76856	HOUSING FDD/FDDL24
	76857	HOUSING FDD/FDDL30
	76858	HOUSING FDD/FDDL36
	76859	HOUSING FDD/FDDL42
	76860	HOUSING FDD/FDDL48
	76861	HOUSING FDD/FDDL54
	76862	HOUSING FDD/FDDL60
	76863	HOUSING FDD/FDDL66
	76864	HOUSING FDD/FDDL72
	77085	HOUSING FDD/FDDL84
	77086	HOUSING FDD/FDDL96
2	67004	TOGGLE SWITCH
3	76100	SWITCH GUARD
4	55564-EGO	INFINITE CONTROL 120V
	87054-EGO	INFINITE CONTROL 208V
	87053-EGO	INFINITE CONTROL 240V
5	55825	KNOB
6	76985	REFLECTOR FD18 DIRECTED
	76986	REFLECTOR FD24 DIRECTED
	76987	REFLECTOR FD30 DIRECTED
	76988	REFLECTOR FD36 DIRECTED
	76989	REFLECTOR FD42 DIRECTED
	76990	REFLECTOR FD48 DIRECTED
	76991	REFLECTOR FD54 DIRECTED
	76992	REFLECTOR FD60 DIRECTED
	76993	REFLECTOR FD66 DIRECTED
	76994	REFLECTOR FD72 DIRECTED
	76995	REFLECTOR FD84 DIRECTED
	76996	REFLECTOR FD96 DIRECTED
7	75801	ELEMENT FD18 120V 400W
	75833	ELEMENT FD18 208V 400W
	75830	ELEMENT FD18 240V 400W
	75851	ELEMENT FD18 120V 250W
	75873	ELEMENT FD18 208V 250W
	75874	ELEMENT FD18 240V 320W
	75461	ELEMENT FD24 120V 575W
	75813	ELEMENT FD24 208V 575W
	75814	ELEMENT FD24 240V 575W
	75852	ELEMENT FD24 120V 350W
	75875	ELEMENT FD24 208V 350W
	75876	ELEMENT FD24 240V 350W
	75802	ELEMENT FD30 120V 760W
	75820	ELEMENT FD30 208V 760W
	75831	ELEMENT FD30 240V 760W
	75853	ELEMENT FD30 120V 450W
	75877	ELEMENT FD30 208V 450W
	75878	ELEMENT FD30 240V 450W
	75803	ELEMENT FD36 120V 920W
	75804	ELEMENT FD36 208V 920W
	75805	ELEMENT FD36 240V 920W
	75854	ELEMENT FD36 120V 575W
	75855	ELEMENT FD36 208V 575W
	75856	ELEMENT FD36 240V 575W
	75819	ELEMENT FD42 120V 1100W
	75821	ELEMENT FD42 208V 1100W
	75822	ELEMENT FD42 240V 1100W
	75857	ELEMENT FD42 120V 675W
	75858	ELEMENT FD42 208V 675W
	75859	ELEMENT FD42 240V 675W
	75806	ELEMENT FD48 120V 1265W
	75807	ELEMENT FD48 208V 1265W
	75808	ELEMENT FD48 240V 1265W
	75860	ELEMENT FD48 120V 800W
	75861	ELEMENT FD48 208V 800W
	75862	ELEMENT FD48 240V 800W
	75823	ELEMENT FD54 120V 1425W
	75824	ELEMENT FD54 208V 1425W
	75825	ELEMENT FD54 240V 1425W
	75863	ELEMENT FD54 120V 925W
	75864	ELEMENT FD54 208V 925W
	75865	ELEMENT FD54 240V 925W
	75817	ELEMENT FD60 120V 1600W
	75809	ELEMENT FD60 208V 1610W
	75810	ELEMENT FD60 240V 1610W
	75866	ELEMENT FD60 120V 1050W
	75867	ELEMENT FD60 208V 1050W
	75868	ELEMENT FD60 240V 1050W
	75826	ELEMENT FD66 208V 1800W
	75827	ELEMENT FD66 240V 1800W
	75869	ELEMENT FD66 208V 1160W
	75870	ELEMENT FD66 240V 1160W
	75811	ELEMENT FD72 208V 1980W
	75812	ELEMENT FD72 240V 1980W
	75871	ELEMENT FD72 208V 1275W
	75872	ELEMENT FD72 240V 1275W
	75879	ELEMENT FD84 208V 2050W
	75880	ELEMENT FD84 240V 2050W
	75881	ELEMENT FD96 208V 2400W
	75882	ELEMENT FD96 240V 2400W
8	77151	COVER LARGE RH
9	77155	COVER SMALL RH
10	77157	ELEMENT GUARD
11	76955	MOUNTING BRACKET
12	67003	ON-OFF PLATE
13	56530	PILOT LIGHT
14		WIRE SET: SPECIFY MODEL NO.
15	76159	END COVER RH DL
16	89182	SNAP-IN BUSHING
17	76189	INSULATION FD18 THRU FD72
18	76190	INSULATION FD18
	76191	INSULATION FD24
	76192	INSULATION FD30
	76193	INSULATION FD36
	76194	INSULATION FD42
	76195	INSULATION FD48
	76196	INSULATION FD54
	76197	INSULATION FD60
	76198	INSULATION FD66
	76199	INSULATION FD72
19	76211	LIGHT SUPPORT DL18
	76212	LIGHT SUPPORT DL24
	76213	LIGHT SUPPORT DL30
	76214	LIGHT SUPPORT DL36
	76215	LIGHT SUPPORT DL42
	76216	LIGHT SUPPORT DL48
	76217	LIGHT SUPPORT DL54
	76218	LIGHT SUPPORT DL60
	76219	LIGHT SUPPORT DL66
	76220	LIGHT SUPPORT DL72
	77015	LIGHT SUPPORT DL84
	77016	LIGHT SUPPORT DL96
20	75917	TWIN LAMPHOLDER
21	75916	COATED LIGHT BULB 120V 40W
	76874	COATED LIGHT BULB 240V 40W
22	77152	COVER LARGE LH
23	76803	END PLATE
24	77158	ELEMENT SUPPORT
25	77156	COVER SMALL LH
		PARTS NOT SHOWN
	58004	SELF RETAINING FASTENER
	89087	8-32 X 3/16 MACHINE SCREW
	88993	10-32 X 3/8 NYLOCK MACHINE
	88909	8-18 X 3/8 SHEET METAL (AB)
	89059	#10 EXTERNAL LOCKWASHER
	88961	10-24 HEX NUT GREEN-GROUND
	46877	1/8-27 X 3/4 NIPPLE
	46876	1/8-27 NUT

FDD or FDDL-18 Thru -96 EXPLODED VIEW

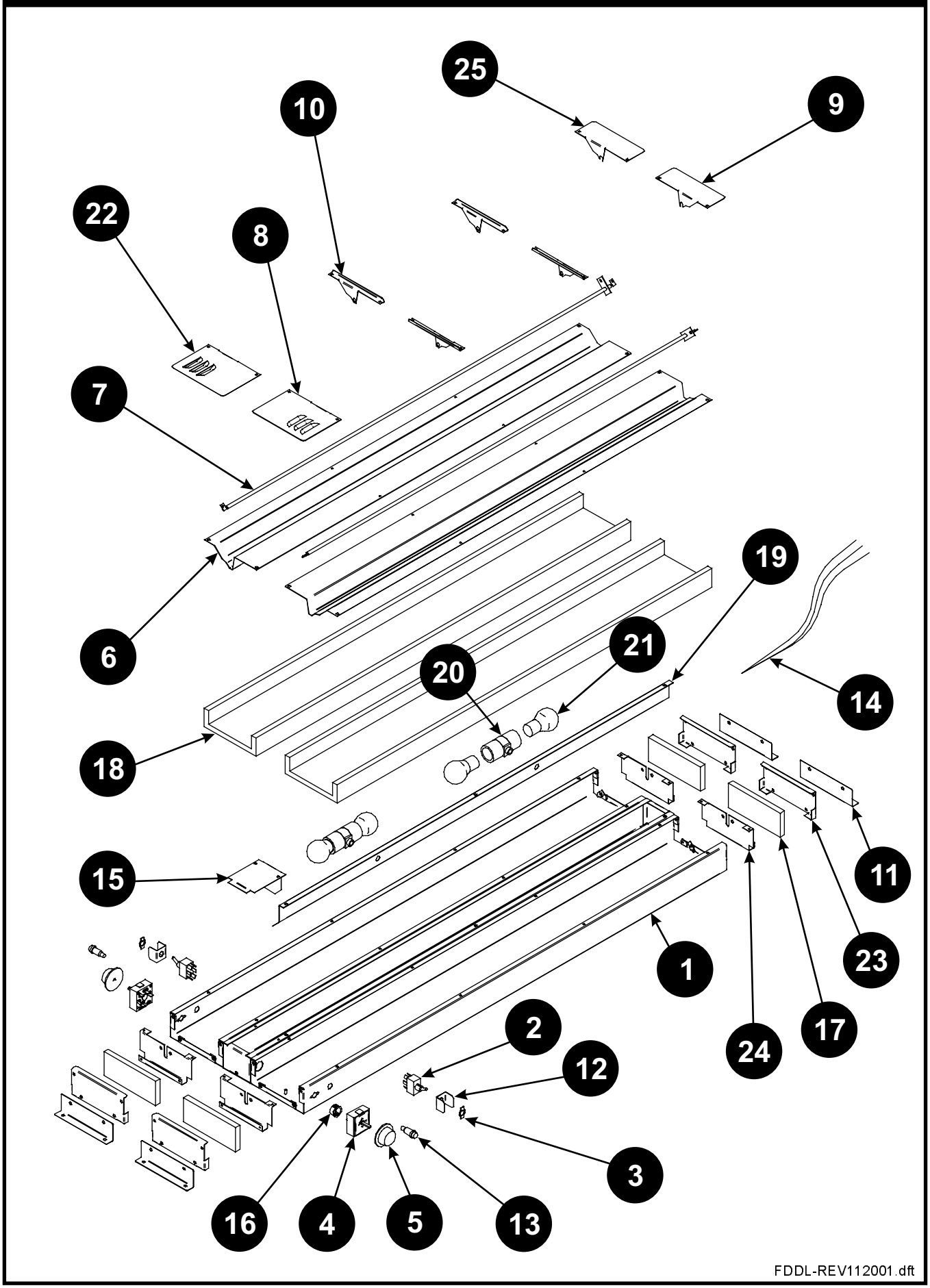

9. APW WYOTT EQUIPMENT LIMITED WARRANTY

APW Wyott Foodservice Equipment Company warrants it's equipment against defects in materials and workmanship, subject to the following conditions:

This warranty applies to the original owner only and is not assignable.

Should any product fail to function in its intended manner under normal use within the limits defined in this warranty, at the option of APW Wyott such product will be repaired or replaced by APW Wyott or its Authorized Service Agency. APW Wyott will only be responsible for charges incurred or service performed by its Authorized Service Agencies. The use of other than APW Wyott Authorized Service Agencies will void this warranty and APW Wyott will not be responsible for such work or any charges associated with same. The closest APW Wyott Authorized Service Agent must be used.

This warranty covers products shipped into the 48 contiguous United States, Hawaii, metropolitan areas of Alaska and Canada. There will be no labor coverage for equipment located on any island not connected by roadway to the mainland.

Warranty coverage on products used outside the 48 contiguous United States, Hawaii, and metropolitan areas of Alaska and Canada may vary. Contact the international APW Wyott distributor, dealer, or service agency for details.

Time Period
One year for parts and one year for labor, effective from the date of purchase by the original owner. The Authorized Service Agency may, at their option, require proof of purchase. Parts replaced under this warranty are warranted for the un-expired portion of the original product warranty only.

Exceptions

- ***Gas/Electric Cookline:** Models GCB, GCRB, GF, GGM, GGT, CHP-H, EF, EG, EHP. Three (3) Year Warranty on all component parts, except switches and thermostats. (2 additional years on parts only. No labor on second or third year.)
- ***Broiler Briquettes, Rock Grates, Cooking Grates, Burner Shields, Fireboxes:** 90 Day Material Only. No Labor.
- ***Heat Strips:** Models FD, FDL, FDD, FDDL. Two (2) Year Warranty on element only. No labor second year.
- ***Glass Windows, Doors, Seals, Rubber Seals, Light Bulbs:** 90 Day Material Only. No Labor.

In all cases, parts covered by extended warranty will be shipped FOB the factory after the first year.

Portable Carry In Products
Equipment weighing over 70 pounds or permanently installed will be serviced on-site as per the terms of this warranty. Equipment weighing 70 pounds or under, and which is not permanently installed, i.e. with cord and plug, is considered portable and is subject to the following warranty handling limitations. If portable equipment fails to operate in its intended manner on the first day of connection, or use, at APW Wyott's option or its Authorized Service Agency, it will be serviced on site or replaced.

From day two through the conclusion of this warranty period, portable units must be taken to or sent prepaid to the APW Wyott Authorized Service Agency for in-warranty repairs. No mileage or travel charges are allowed on portable units after the first day of use. If the customer wants on-site service, they may receive same by paying the travel and mileage charges. Exceptions to this rule: (1) countertop warmers and cookers, which are covered under the Enhanced Warranty Program, and (2) toasters or rollergrills which have in store service.

Exclusions
The following conditions are not covered by warranty:

- *Equipment failure relating to improper installation, improper utility connection or supply and problems due to ventilation.
- *Equipment that has not been properly maintained, calibration of controls, adjustments, damage from improper cleaning and water damage to controls.
- *Equipment that has not been used in an appropriate manner, or has been subject to misuse or misapplication, neglect, abuse, accident, alteration, negligence, damage during transit, delivery or installation, fire, flood, riot or act of god.
- *Equipment that has the model number or serial number removed or altered.

If the equipment has been changed, altered, modified or repaired by other than an Authorized Service Agency during or after the warranty period, then the manufacturer shall not be liable for any damages to any person or to any property, which may result from the use of the equipment thereafter.

This warranty does not cover services performed at overtime or premium labor rates. Should service be required at times which normally involve overtime or premium labor rates, the owner shall be charged for the difference between normal service rates and such premium rates. APW Wyott does not assume any liability for extended delays in replacing or repairing any items beyond its control.

In all cases, the use of other than APW Wyott Authorized OEM Replacement Parts will void this warranty.

This equipment is intended for commercial use only. Warranty is void if equipment is installed in other than commercial application.

Water Quality Requirements
Water supply intended for a unit that has in excess of 3.0 grains of hardness per gallon (GPG) must be treated or softened before being used. Water containing over 3.0 GPG will decrease the efficiency and reduce the operation life of the unit.

Note: Product failure caused by liming or sediment buildup is not covered under warranty.

"THE FOREGOING WARRANTY IS IN LIEU OF ANY AND ALL OTHER WARRANTIES EXPRESSED OR IMPLIED INCLUDING ANY IMPLIED WARRANTY OF MERCHANTABILITY OR FITNESS FOR PARTICULAR PURPOSES AND CONSTITUTES THE ENTIRE LIABILITY OF APW WYOTT. IN NO EVENT DOES THE LIMITED WARRANTY EXTEND BEYOND THE TERMS STATED HEREIN."

9/05