Frosty Factory
of America, Inc.

2301 S. Farmerville St., Ruston, LA 71270

frostyfactory.com

(318) 255-1162 (800) 544-4071 (318) 255-1170 fax

Model 117

Service Manual

All technical data, pictures and drawings contained in this manual are not binding on the manufacturer nor can the manufacturer be held liable for any modifications to the machine in whole or in part.

Revised 1/2016

TABLE OF CONTENTS

1.0 INTRODUCTION
- 1.1 Use of the Manual
- 1.2 Preliminary Inspection
- 1.3 Description
- 1.4 Dimensions

2.0 LOCATION AND INSTALLATION
- 2.1 Safety Precautions
- 2.2 Installation

3.0 OPERATION
- 3.1 Machine Controls
- 3.2 The Product You Serve
- 3.3 Product Consistency
- 3.4 Start Up
- 3.5 Freeze Time

4.0 MAINTENANCE
- 4.1 Cleaning
- 4.2 Re-Assembly
- 4.3 Preventative Maintenance
- 4.4 Extended Storage
- 4.5 Troubleshooting
- 4.6 Rear Cylinder and Drive Assembly Parts List
- 4.7 Torque Consistency Control
- 4.8 Faceplate/Faucet Assembly
- 4.9 Float Switch
- 4.9a Thermostat Assemblies
- 4.10 Using the Cleaning Brushes
- 4.11 Beater Bar Spring and Seal Installation
- 4.12 Beater Seal Assembly
- 4.13 Ceramic Seal Removal and Re-installation

5.0 SPARE PARTS LIST
6.0 WIRE DRAWING
7.0 ELECTRICAL SCHEMATIC
8.0 FACTORY ASSISTANCE

SECTION 1
INTRODUCTION

1.1 USE OF THIS MANUAL

Your service manual has been prepared as a guide to help you get the most from your Frozen Drink Machine. It contains information about the installation and operation of your machine. The manual also contains instructions for service and care. The manual should be read carefully by the operator of the Frozen Drink Machine to become familiar with the machine and the correct operating procedures described within. The following notations are used throughout the manual to bring important facts to your attention:

"Warning" - This notation is used whenever the personal safety of the operator(s) might be jeopardized, if procedures are not followed correctly.

WARNING
DO NOT INSERT ANY OBJECTS
INTO CYLINDER OR HOPPER WHILE
MACHINE IS RUNNING!

"Caution" - This notation is used whenever the operator may receive or cause injury if not observed.

CAUTION
RISK OF ELECTRICAL SHOCK.
DISCONNECT POWER
BEFORE SERVICING UNIT.

CAUTION
MOVING PARTS
DO NOT OPERATE UNIT
WITH PANELS REMOVED

"Notice" - This notation is used to bring important information to your attention that will enhance the performance of your machine.

1.2 PRELIMINARY INSPECTION

Unpack the unit as soon as possible upon its arrival. Check the entire machine and its contents for possible shipping damage. Note damage, if any, and notify your carrier immediately. Frosty Factory of America cannot be held responsible for damaged merchandise caused by shipping. Inventory the accessories to be sure they include the items you specified on your order. Normally the accessories include:

1 Beater Bar, 1 Drip Tray, 1 Faceplate, 4 Faceplate Knobs, 1 Hopper Cover, 1 Petro-Gel, 1 Sanitizer, 2 Spare Faucet O-Rings, 1 Warranty Card, 2 Wire Brushes.

1.3 DESCRIPTION

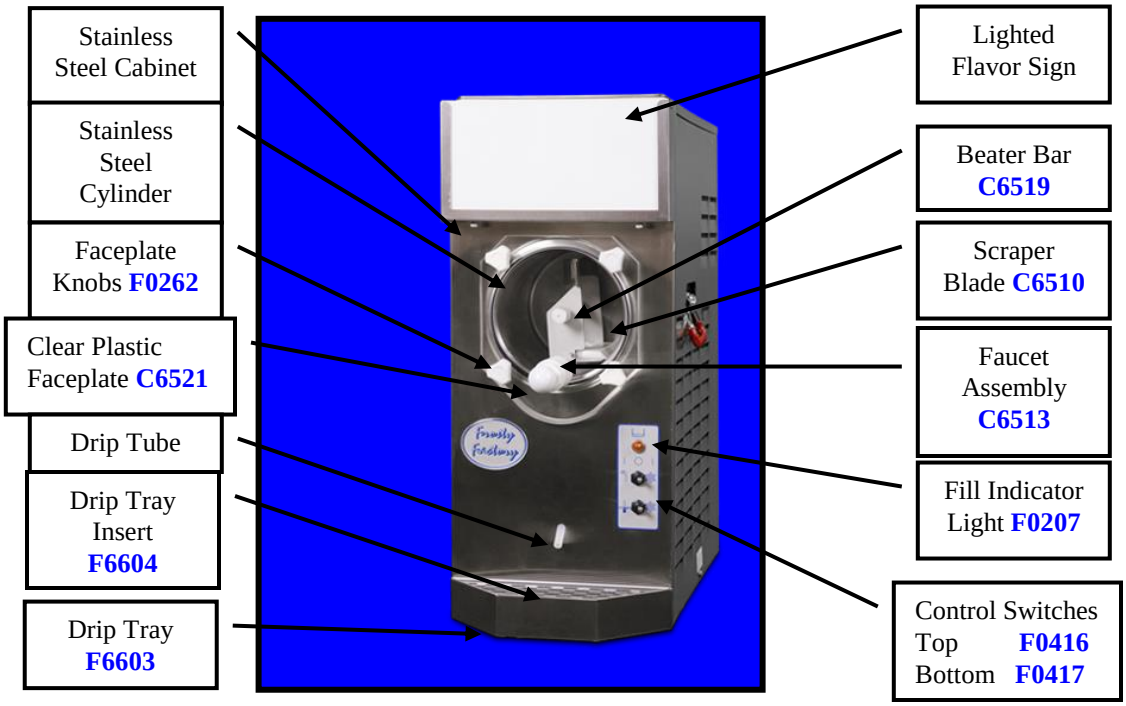

1.4 DIMENSIONS

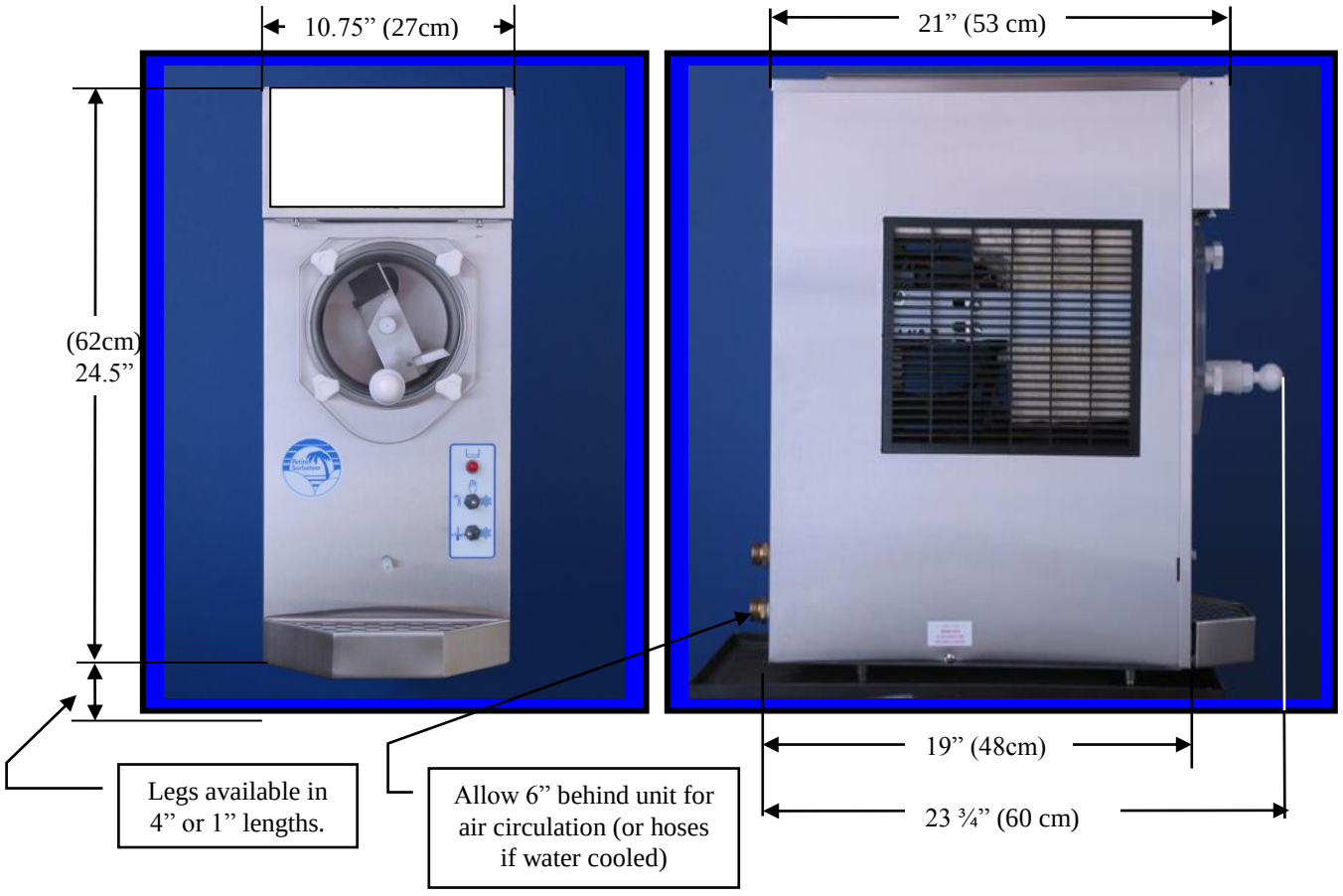

SECTION 2
LOCATION & INSTALLATION

2.1 SAFETY PRECAUTIONS

Do not attempt to operate your Frozen Drink Machine until the safety precautions and operating instructions in this manual are read completely and are thoroughly understood.

2.2 INSTALLATION

Placing your Frozen Drink Machine in a highly visible area will enhance sales.

CAUTION: Do not attempt to share the dedicated electrical outlet with any other appliance; this will cause the circuit breaker to trip.

1. Remove the machine from the shipping container.
2. Place the unit on a sturdy platform able to hold the weight of the machine when full of product. (Usually about 150 #)
3. Level the machine by turning the adjustable part of the leg. The machine must be level front to back as well as left to right.
4. Air-cooled condensers must have **correct ventilation**. Air intake is at the rear of the machine and discharge through the side; 24" clearance is required on both sides and 8"at the back. In addition, all Frozen Drink Machines require 12" clearance above the machine.

NOTICE: Locating the unit in direct sunlight, near cooking equipment or any high heat area will reduce the performance of your machine.

CAUTION: Extended operations under severe heat condition can damage the cooling system.

NOTICE: Establishments that serve beverages from frozen drink machines are responsible for providing the necessary facilities for cleaning and sanitizing their food service equipment.

5. Place the three-position switch in the OFF position (center).
6. Connect the power cord. The Frozen Drink Machine must be connected to a properly grounded receptacle. The electrical cord furnished as part of the Frozen Drink Machine has a three prong grounding type plug. The use of an extension cord is not recommended. If one must be used, refer to the national and local electrical codes. **Do not** use an adapter to get around grounding requirements.

WARNING: Do not attempt to alter the electrical plug. Serious injury or electrocution may result.

Notice: Your receptacle should look like this.

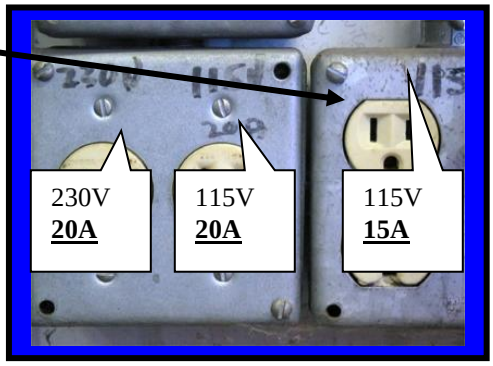

7. Install the drip tray, cover, beater bar and faceplate assemblies on the Frozen Drink

SECTION 3
OPERATION

3.1 MACHINE CONTROLS

Two selector switches located on the front of the machine control operation of the Frozen Drink Machine. Selection of the right (snowflake) position, with both switches, will schedule the machine for normal operation. The compressor cycle is protected by a time delay circuit, which will engage the compressor approximately 2 minutes after normal operation is initiated. A red fill light located above the switches will illuminate when the level of mix is low in the hopper. A thermostat knob on the electrical control box of your machine is set at the factory and should not be changed or adjusted except by an authorized service repairman.

Refer to the information below for functions available with various combinations of switch positions.

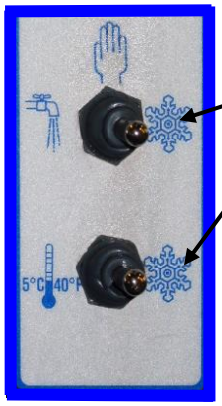

Normal Operation – Both switches on **snowflake.** Machine will freeze mix to provide frozen beverage as desired.

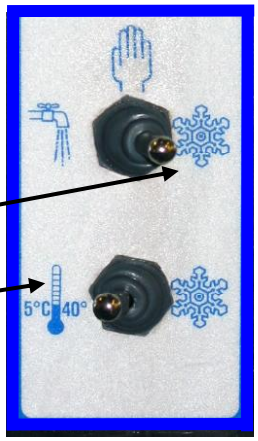

Cooling Operation – Top switch on **snowflake**, Bottom switch on **thermometer** symbol. Machine will automatically come on whenever necessary to keep mix cooled to 5°C/40° F - used primarily for overnight storage of mix remaining in the machine.

Cleaning Operation - The drive motor will run in the **faucet** position to allow a stirring action of the rinse water while cleaning.

Off - The hand symbol is the recognized international symbol for "stop". In this position, the machine will not run.

3.2 THE PRODUCT YOU SERVE

The Frozen Drink Machine will produce a fine grain, semi-frozen slush when the proper mix is used. When measured with a refractometer, the proper mix will measure 12 to 18 "brix". Too little sugar in the mix will cause larger ice crystals to form. Too much sugar will lengthen the freeze time.

CAUTION: Any attempt to freeze water only will cause severe damage to your machine.

NOTICE: Do not add sugar directly into the machine, as some of it will settle and result in an improper mix.

FRUIT JUICES with at least **32 grams of sugar per 8-oz. serving** will freeze well in the Frozen Drink Machine. They will remain stable during the freezing process while retaining their natural color and flavor.

NEUTRAL BASES are used to produce a neutral frozen cocktail base. A wide variety of different drinks can be created from one neutral base by the addition of various flavors. Most brands of neutral bases specify a mixture of four parts water to one part neutral base. However, before use in the Frozen Drink Machine, be sure the "brix" level is 12 to 18.

The amount of **ALCOHOL** in the recipe will affect the freezing process. As a rule of thumb, for the mix to freeze properly, the recipe should contain no more than 25 percent alcohol.

Suggestion for optimum production and sales:

1) Use the finest ingredients available.
2) Test the product before serving it.
3) Keep the machine clean - **ALWAYS!**

3.3 PRODUCT CONSISTENCY

An exclusive, patented, torque consistency control (TCC) developed by Frosty Factory of America will allow for consistent texture and thickness adjustments of your frozen beverages. The adjustment screw (accessible through the left side panel) is pre-set at the factory. Various mix consistencies can be achieved by turning the screw clockwise (thicker drink) or counter clockwise (thinner drink). Turn the screw one full turn then allow enough time to lapse (about three minutes) for the compressor to complete a cycle before sampling. Continue this process until the desired result is obtained.

3.4 START UP

NOTICE: Before start-up, be sure the machine has been sanitized in accordance with procedures set forth in the cleaning section of this manual.

Pour the mix into the hopper and allow it to drain into the cylinder.

Do not run the machine when the freezing cylinder is not completely full!

Fill the Hopper to about 1 inch from the top

When the cylinder is full and the hopper is filled to one inch from the top, the machine is ready to run. Turn on by selecting the "right" (snowflake) position of **both** switches on the front panel.

NOTICE: Always add mix as soon as the red, level indicator light, above the switches, comes on to prevent air from entering the cylinder.

CAUTION: Allowing air into the cylinder will cause a rocking motion of the machine. If the mix is not yet frozen the air can escape by turning the machine off for 20-30 seconds.

WARNING: Never under any circumstances, place your finger or any other object into the hopper or feed hole while the machine is in operation. Serious personal injury may occur.

3.5 FREEZE TIME

The freeze time on the Model 117A is approximately **20** minutes when **ideal conditions** are met. Such as, pre-cooled starting mix temperature of 40 degrees and room temperature at 80 degrees. The time will increase if the machine in not properly ventilated or is operated in a hot environment. Recipes with high alcohol or high sugar content will naturally take a little longer.

SECTION 4
MAINTENANCE

4.1 CLEANING

The following cleaning procedure should be used for initial start-up and on an as needed basis to comply with the minimum cleaning and sanitizing frequencies specified by the federal, state or local regulatory agency having jurisdiction.

(1) Turn the machine to the "OFF", hand position then remove hopper cover

(2) If applicable, drain mix into a sanitized container as per local health code procedures.

Note: Do not put hands or foreign matter into mix.

(3) Pour two gallons of cool water (75°F.) into the hopper. Place upper switch in "faucet" position to let the machine stir for 2 minutes. Turn machine "OFF", drain and dispose of the rinse water. Repeat until water is clear.

(4) **Remove the knobs from the faceplate** by turning in a counter clockwise direction. Carefully pull the faceplate straight away from the front of the machine. Remove the beater bar assembly from the cylinder. Then slide the spring seal off the rear of the beater bar. Unscrew white faucet cap to remove faucet plunger from faucet body. Remove all o-rings for cleaning.

Note: Do not unscrew faucet body from faceplate to clean. (Leak free service after disturbing the Teflon seal cannot be assured).

(5) All parts removed during the above steps plus the drip [illegible] cleaned in your warm (100°F) cleaning solution. Rinse all parts in clean rinse water and allow to air-dry before re-assembly.

(6) Use cloth and cleaning solution to wipe any residue from cylinder and hopper.

(7) Re-assemble as shown in section 4.2 (next page).

(8) Mix two gallons of warm water (approximately 100°F) with two ounces of sanitizing powder to achieve 100 parts/million (PPM) sanitizing solution.

(9) Pour the sanitizing solution into the hopper.

(10) Place upper switch in "faucet" position. Let solution stir for 5 minutes. Turn upper switch "OFF" (hand) position. **Drain all solution.**

Notice: Do not leave the solution in the machine for more than 5 minutes.

(11) Pour product into hopper. Replace hopper cover. Place both switches in right (snowflake) position when ready to freeze product.

4.2 RE-ASSEMBLY

(1) Hand wipe all surfaces to remove any remaining residue on the machine, then: using Petro-Gel (or other sanitary food grade lubricant), lightly lubricate the longer end of the **beater shaft**. Slide beater seal onto the shaft with the spring end toward the beater bar. (Refer to diagram on top of the hopper cover for correct installation of spring seal).

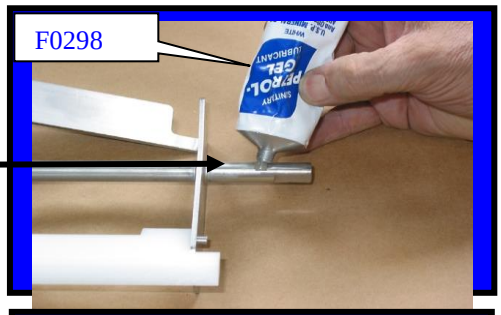

NOTICE: The **black carbon ring** must be facing the end of the beater bar so it will be in direct contact with the white ceramic seal inside the cylinder when the beater bar is re-installed. **This is a dry seal and must be kept free of lubricants.**

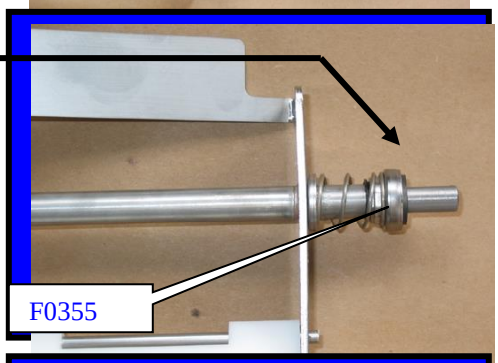

CAUTION: The beater seal may become damaged if the beater **shaft** is not lubricated before installation of the beater

(2) Carefully insert the **beater bar** (with beater seal) into hole at the rear of the cylinder and rotate until it fully engages into the drive plate.

CAUTION: Do not strike the ceramic seal with the beater bar during installation!

(3) Lubricate the large, black, rubber, faceplate O-ring with Petro-Gel then re-install and press firmly into the faceplate groove for proper fit. Re-install o-rings on faucet

(4) Re-install the **faceplate** on the machine. First place the **faceplate bushing** onto the beater shaft. Then slide face plate onto the four studs. Now re-attach the faceplate knobs and tighten evenly until the faceplate O-ring is snug against the cylinder. Re-install float and float clip.

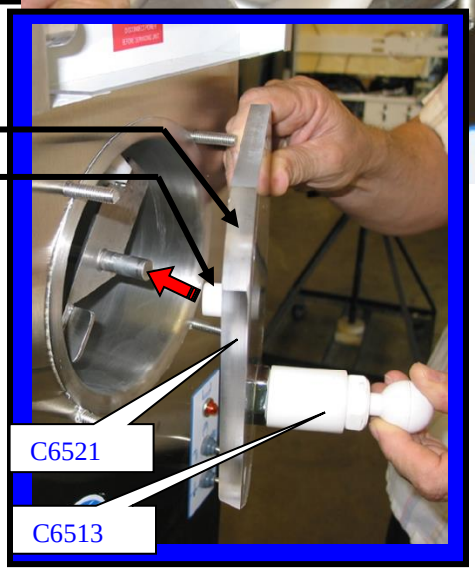

CAUTION: Do not over tighten the knobs or tighten against a beater bar that is not fully engaged in the drive plate; Permanent distortion to the faceplate may occur!

(5) Mix two gallons of warm water with one 2 oz. packet of sanitizer.

(6) Pour two gallons of solution into hopper. Clean the hopper and feed hole with a with a clean sanitized brush.

(7) Place upper switch in "faucet" position. Let solution stir for 5 minutes. Turn upper switch "OFF" (hand position), **Drain all solution**. **(DO NOT RINSE!)**

NOTICE: Do not leave cleaning solution in for more than 5 minutes

(8) Pour product into hopper. Replace hopper cover. Place both switches in right (snowflake) position when ready to freeze product.

4.3 PREVENTATIVE MAINTENANCE

It is recommended that a maintenance schedule be followed to keep the machine clean and operating properly.

WARNING: never attempt to repair or perform maintenance on machine until the main electrical power has been disconnected.

A. DAILY

The exterior of the machine should be kept clean at all times to preserve the luster of the stainless steel. A mild alkaline cleaner is recommended. Use a soft cloth or sponge to apply the cleaner.

B. WEEKLY

(1) Check O-rings and rear seal for excessive wear and replace if necessary.

(2) Clean the drip tray and front of the freezer with a soap solution.

C. MONTHLY

CAUTION: Air-cooled condensers must have proper air circulation. Failure to clean the condenser on a regular basis may result in serious damage and could void the warranty.

(1) Visually inspect the condenser for dirt by shining a light through the coil from the inside of the condenser.

(2) If the condenser is dirty, place a wet towel over the outside of the condenser.

(3) Using compressed air or a CO2 tank, blow out the dirt from the inside of the condenser. Most of the dirt will cling to the wet towel.

(4) An alternative method of cleaning the condenser is to use a condenser brush and vacuum.

NOTICE: If the condenser is not kept clean, loss of refrigeration efficiency will result, causing extended run time or soft product consistency.

4.4 EXTENDED STORAGE

Refer to the following steps for storage of the machine over any long shutdown period:

(1) Turn the three position switch to the OFF (center) position.

(2) Disconnect (unplug) from the electrical supply source.

(3) Clean thoroughly with a warm detergent all parts that come in contact with the mix. Rinse in clean water and dry all parts. Do not sanitize. Frozen Drink Machine parts can be left disassembled until ready for use.

NOTICE: Do not let the cleaning solution stand in the hopper or in the cylinder during the shutdown period.

4.5 TROUBLESHOOTING

1. Machine does not run when turned on.

- **A.** Be sure that the plug is properly installed in wall outlet.
- **B.** Check and reset circuit breaker if necessary.
- **C.** Be sure that no other appliances are sharing the circuit.
- **D.** If problem remains, call service repairman.

2. Beater motor starts but compressor doesn't start.

- **A.** Both switches must be in the right (Snowflake) position.
- **B.** Allow approximately one or two minutes for time delay to respond.
- **C.** Check that the machine has been properly leveled.
- **D.** If necessary adjust TCC screw.
- **E.** If problem causes circuit breaker to trip, call service repairman.
- **F.** Check for operating extension cord. Use number 10 or 12 cord.

3. Mix dripping from drip tube.

- **A.** Spring seal on beater bar is dirty or improperly installed. Remove, clean and re-install spring seal assembly according to instructions and diagram on top of the hopper cover.
- **B.** Ceramic seal (inside the freezing cylinder) is dirty or loose. Clean ceramic seal. If loose re-install as necessary. Also check that the carbon ring on the seal is not chipped, cracked, dirty or greasy. Replace seal if necessary.

4. Unit runs but product does not freeze to desired consistency.

- **A.** Check recipe for proper amount of sugar.
- **B.** Check tension of TCC screw, if necessary turn clockwise to increase thickness of drink.
- **C.** Check unit for adequate ventilation. (At least 8" clearance required on the sides and 6" at the rear).
- **D.** Check the condenser to see if it has become clogged with lint, dust etc. Clean as necessary.
- **E.** Be sure that the cylinder is full of mix.
- **F.** If problem remains, call service repairman.

5. Fill light is on when hopper is full of product.

- **A.** Remove and re-install float **with two dots facing up. (See pg. 16)**
- **B.** If float is stuck, clean float and stem and re-assemble.

6. No product comes out when faucet handle is pulled while unit is running.

- **A.** Frozen product is blocking "feed hole". **Turn machine off** then clear ice plug from feed hole.

WARNING: Never place fingers in the "feed hole" as serious personal injury may occur.

B. Mix is frozen solid. Low sugar content, product separation or cylinder not full.

7. Compressor starts and stops intermittently.

A. Check to see that the fan is turning freely.
B. Check the condenser to be sure that it is not clogged with lint or dust.
C. If the on/off time is 30 seconds or longer, this is normal if product is frozen and no product has been pulled in a while.
D. If the problem is causing the breaker to trip, call service repairman.

8. Unit continues to run when switched to stand-by.

A. Have qualified technician remove back panel and reset thermostat. (Turn all the way off then turn all the way on again.)
B. If problem remains call service repairman.

9. Beater bar does not turn.

A. Mix is frozen solid. Low sugar content, product separation or cylinder not full.
B. Drive coupling stripped. Drive coupling needs to be replaced
C. Faulty motor. Replace motor

10. Turns Grey or Pitting Metal In The Freezing Barrel

A. Too much chlorine in sanitizing solution: Follow directions on package to get 100 parts/million chlorine solution. Stir this solution in the machine for 1-2 minutes only. **DO NOT ALLOW SANITIZING SOLUTION TO SIT IN THE MACHINE FOR ANY REASON!!!** If the barrel becomes saturated with chlorine apply chlorine neutralizer as need to remove (obtain for swimming pool supply store).

4.6 REAR CYLINDER AND DRIVE ASSEMBLY PARTS LIST
Models 113, 117, 217.

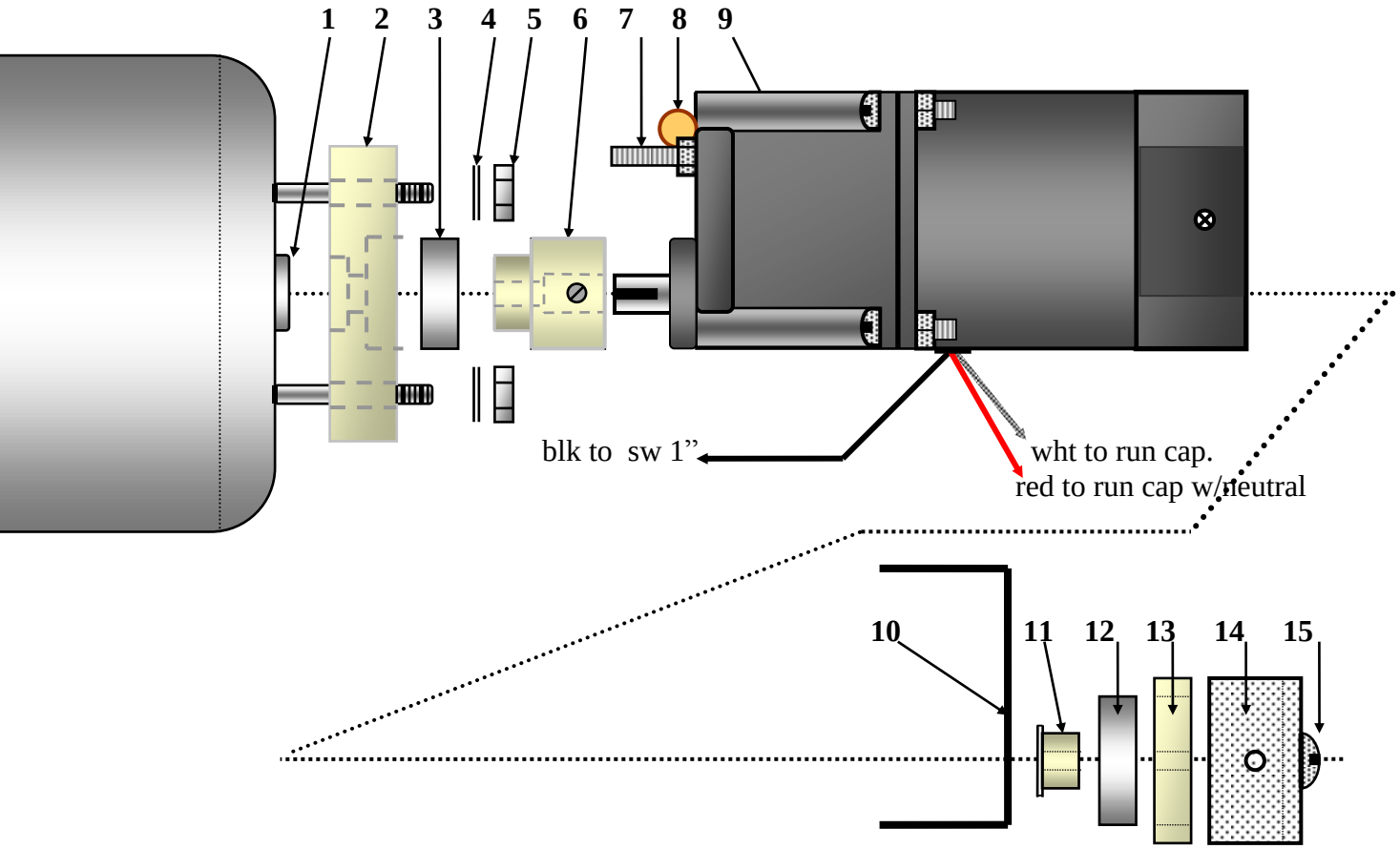

DESCRIPTION	PART NUMBER
1. Spring Seal Ceramic Ring	F0665
2. Bearing Spacer Block	C2316B
3. Front Motor Bearing	F0427
4. Flat Washer	5/16”
5. Nut	5/16”-18
6. Drive Coupling	C0906
7. Stop Bolt Assembly	1/4”-20x11/4”
8. Mercury Switch	F0752
9. Drive Motor 115V	F0472 (F0409 Obs)
Drive Motor 230V	F0415
Gear Box	F5125
10. C-Bracket	F1206
11. C-Bracket Stub	C1207
12. Rear Support Bearing	F0479
13. Rear Bearing Carrier	C1216
14. Rear Cross Brace	F1221
15. Frame Screw	5/16” -18 x ¾”

4.7 TORQUE CONSISTENCY CONTROL MODEL 117A

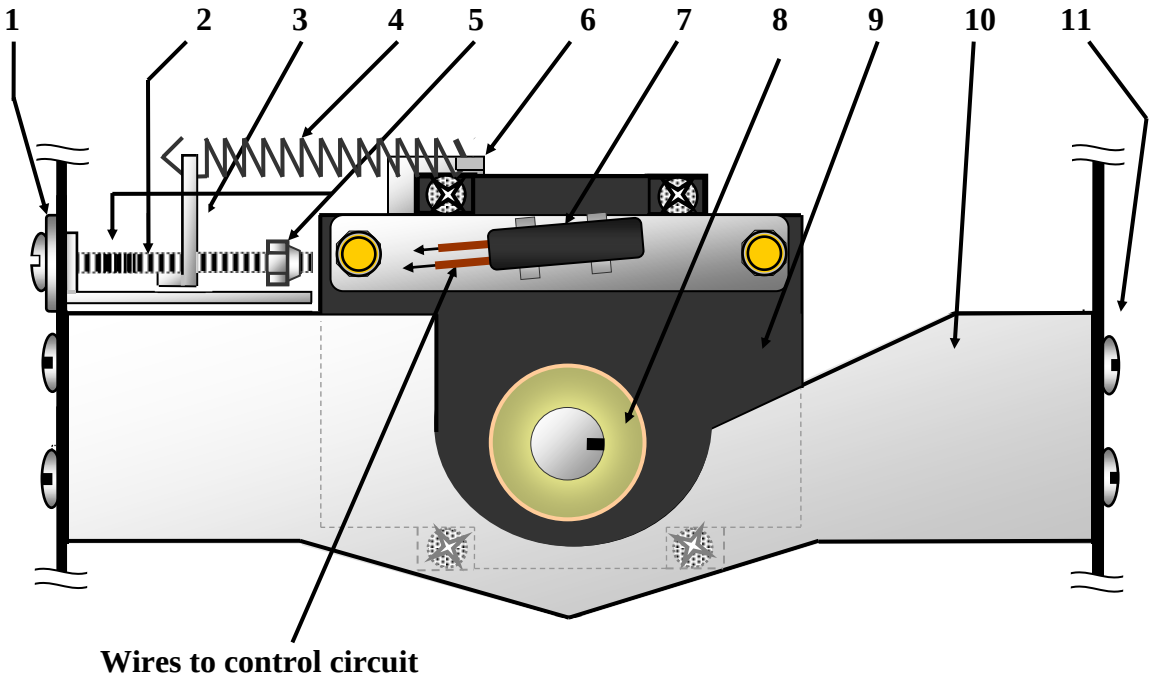

DESCRIPTION	PART NUMBER
1. Washer, Flat	5/16”
2. Tension Adj. Screw	¼”-20x3”
3. Motor Adjustment Bracket	F1225
4. Tension Spring	F0432
5. Lock Nut (¼”x20)	¼”-20
6. Motor Spring Bracket	F1239
7. Mercury Switch Assembly	F0752
8. Drive Coupling	C0906
9. Drive Motor(115V)	F0472 (F0409 Obs)
-- Drive Motor(230V)	F0415
10. Front Cross Brace	F1219
11. Frame Screw	5/16-18x1/2

Notice: Items numbered 9 through 12 are not part of the torque consistency control system, but are listed for user convenience.

4.8 FACEPLATE / FAUCET ASSEMBLY

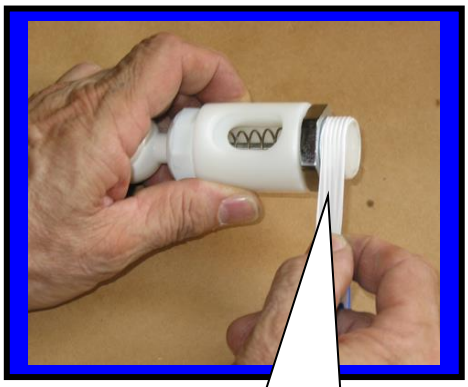

Faucet Assembly **C6513**. Teflon Tape added before installation

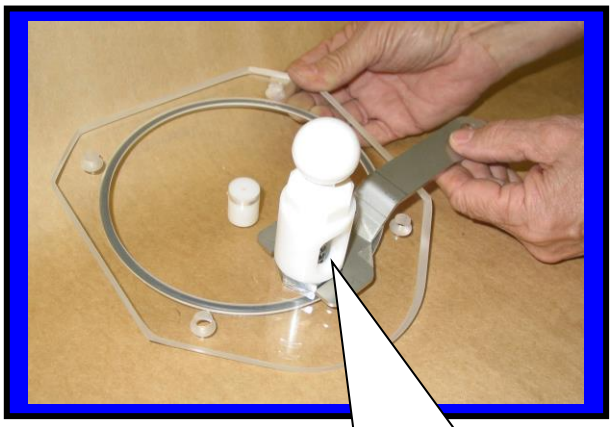

Align Faucet Assembly opening to bottom of faceplate then tighten nut

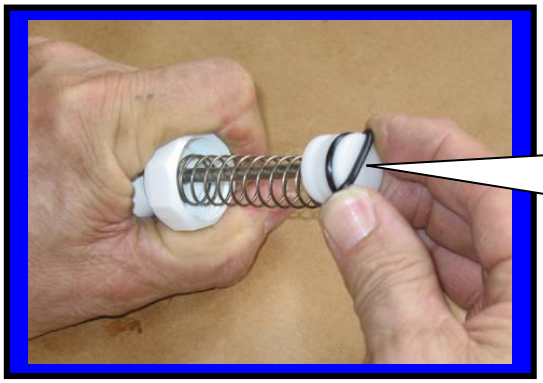

Installing O-rings onto plunger F **0491**

Lubricating O-rings with Petro-Gel **F0298**

Installing Plunger assembly **C6513P** into faucet body

Installing faceplate **C6521** onto front of Machine.

4.8 FACEPLATE/FAUCET ASSEMBY (cont.)

Face Plate/Faucet Assembly	Part No.
A. Face plate assembly with bushing	**C6521**
B. Faucet assembly with nut	**C6513**
C. Faucet body (only)	**C6513B**
D. Plunger assembly	**C6513P**

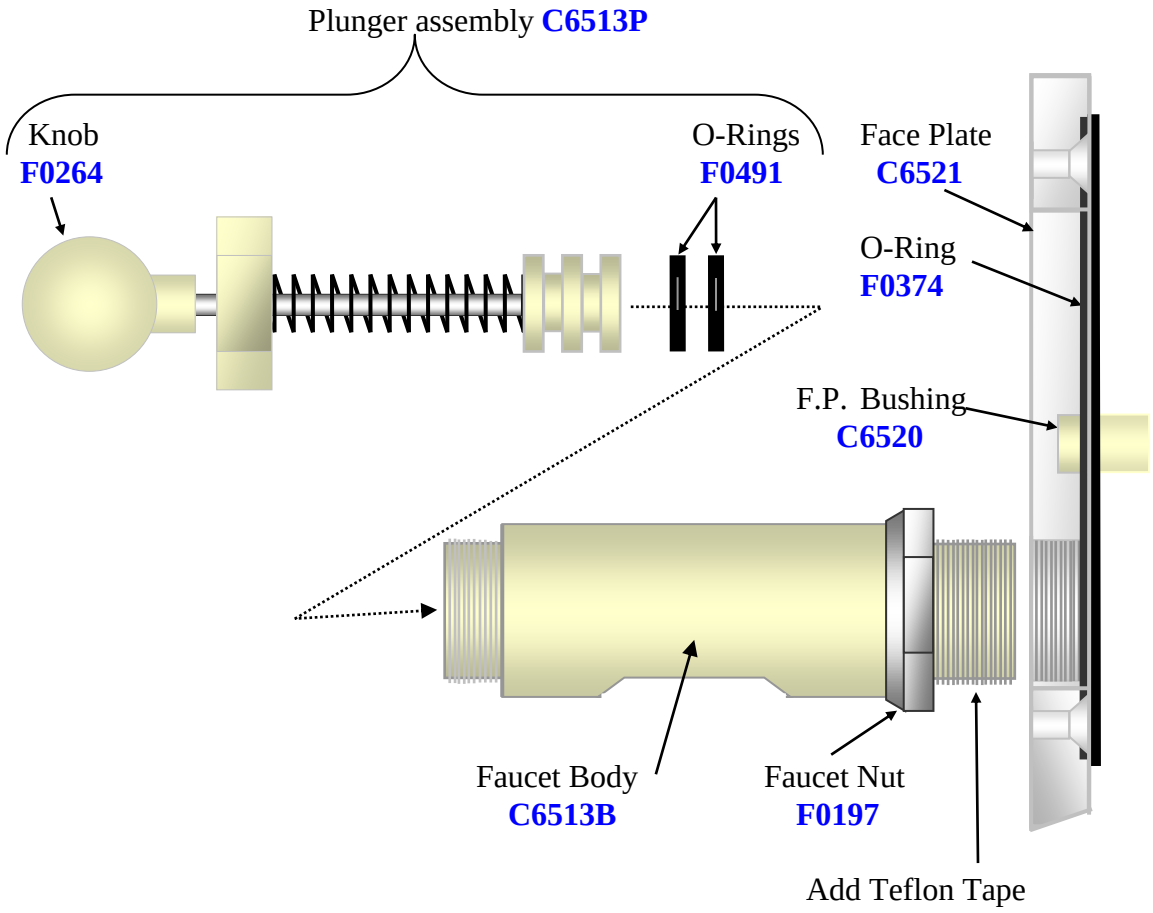

4.9 FLOAT SWITCH ASSEMBLY

1. The float switch assembly consists of: Post switch, Float , Float clip, O-Ring and Nut.
2. There are two dots on one end of the float. When assembled the two dots must be on the top end of the float.
3. Place O Ring so that it will be inside the hopper (sink bottom) when finished.

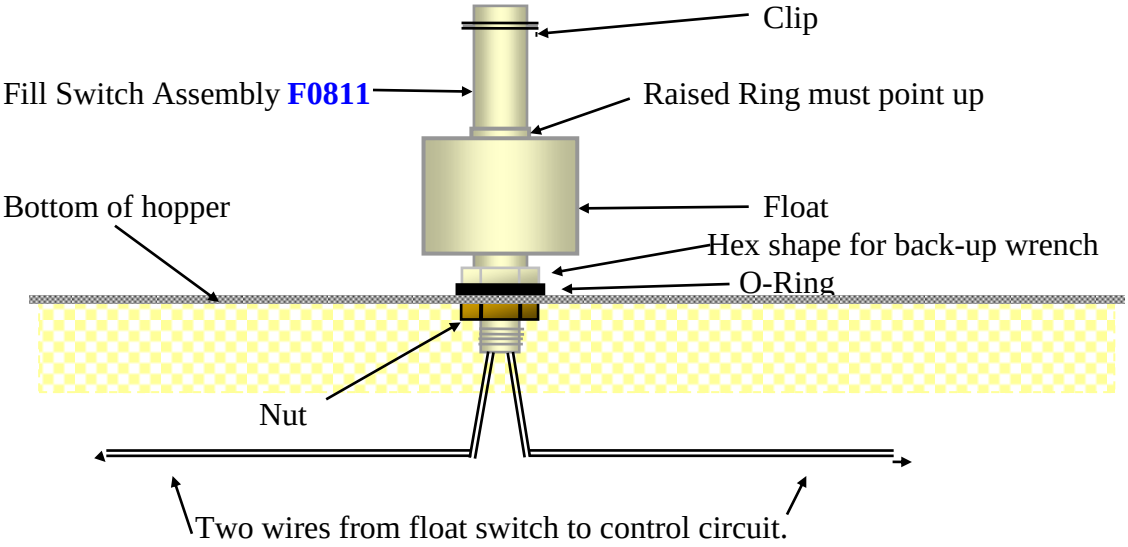

Top View of Float Switch

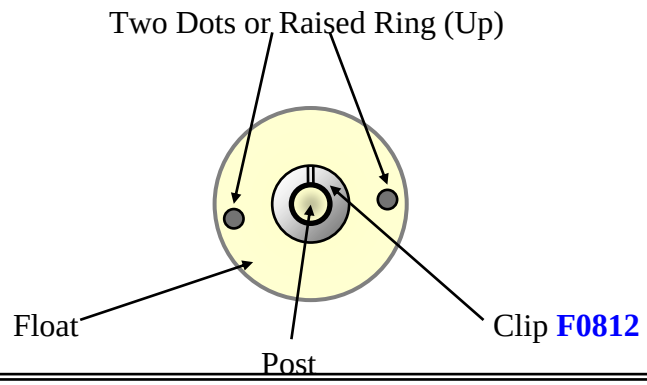

4.9a THERMOSTAT ASSEMBLY

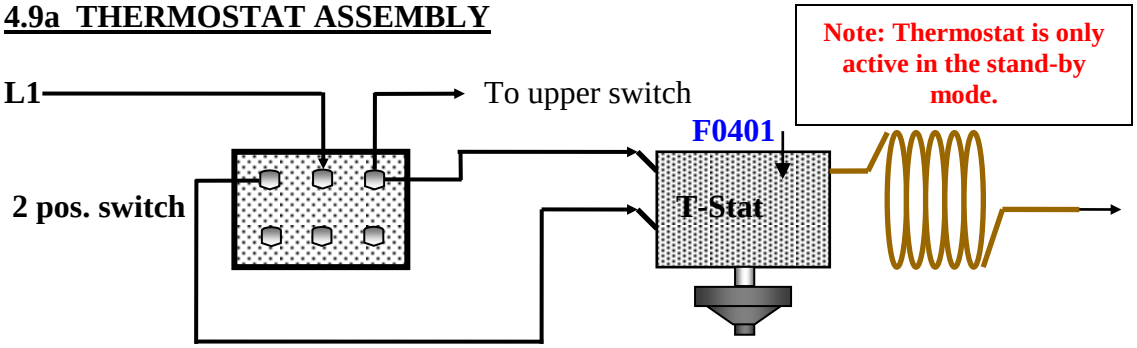

4.10 USING THE CLEANING BRUSHES

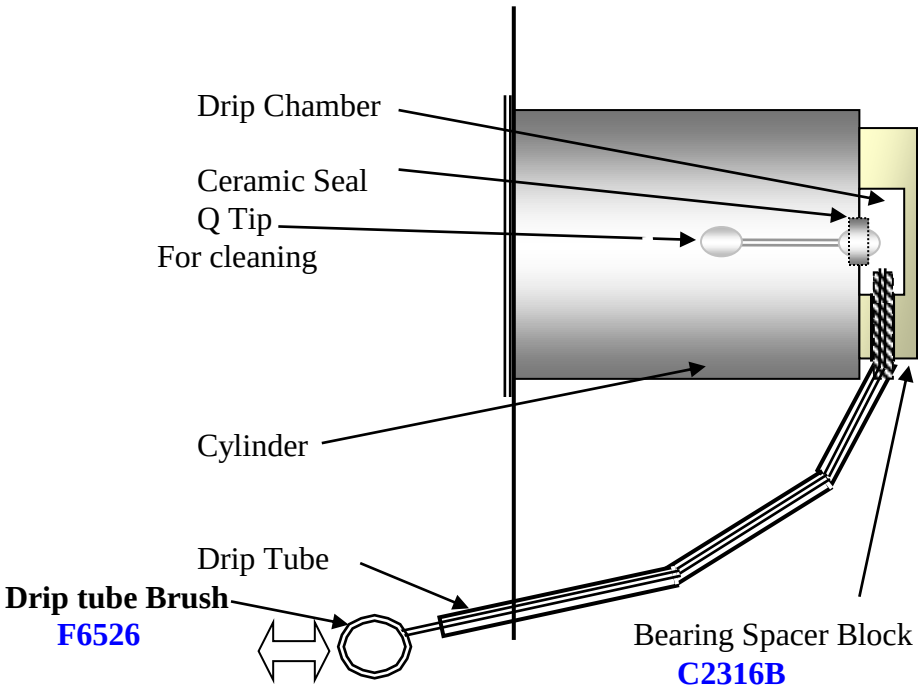

Insert long brush **F6526** into drip tube

Push brush all the way in until it can be seen behind the ceramic ring

4.11 BEATER BAR AND SPRING INSTALLATION

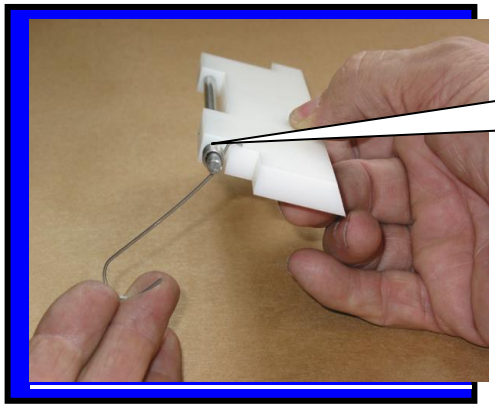

Step 1: Attach scraper blade spring **F6517** as shown.

Step 2: Insert rod end into beater bar frame.

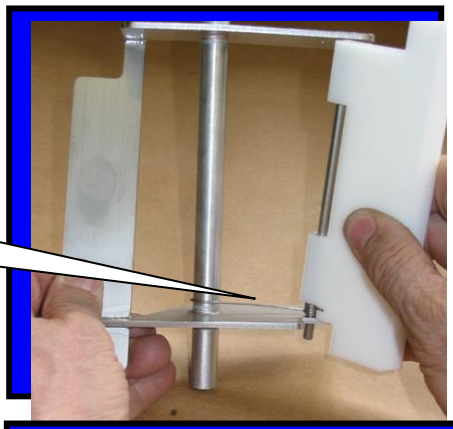

Step 3: Tap scraper blade rod until it is centered.

Step 4: Apply a small dab of Petro-Gel **F0298**

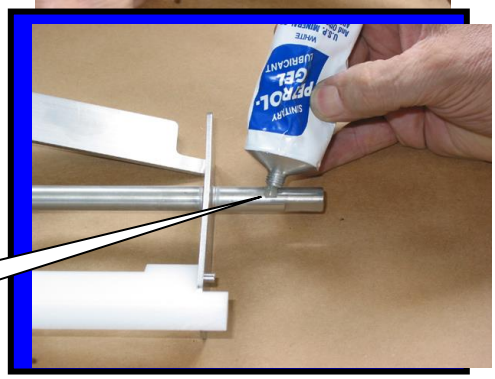

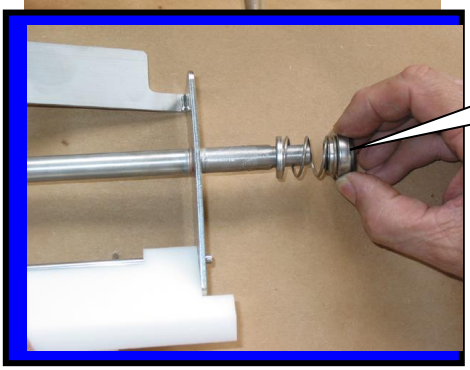

Step 5: Install spring seal **F0355**

Step 6: Squeeze and release spring. Be sure the spring returns to normal before installing into machine.

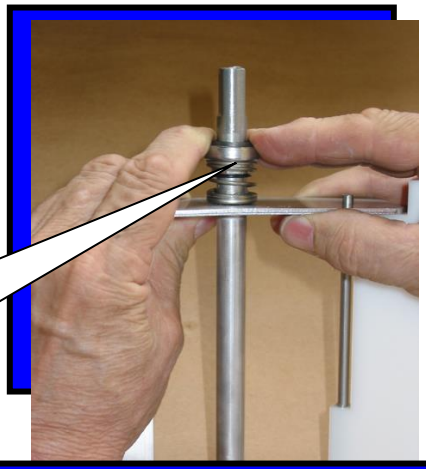

Step 7: Install beater bar **C6519** into cylinder.

Step 8: Install faceplate **C6521** onto machine

4.12 BEATER BAR SEAL ASSEMBLY

1. Using Petro-Gel (or other sanitary food grade lubricant), lightly lubricate the longer end of the beater shaft. Slide beater seal onto the shaft with the spring end toward the beater bar. (Refer to diagram in this section of your manual or on top of the hopper cover for correct installation of spring seal).
2. The black carbon ring must be facing the end of the beater bar so it will be in direct contact with the white ceramic seal inside the cylinder when the beater bar is re-installed. **This is a dry seal and must be kept free of lubricants**. Lube the beater bar shaft ONLY!
3. The beater seal may become damaged if the beater shaft is not lubricated before installation of the beater seal.

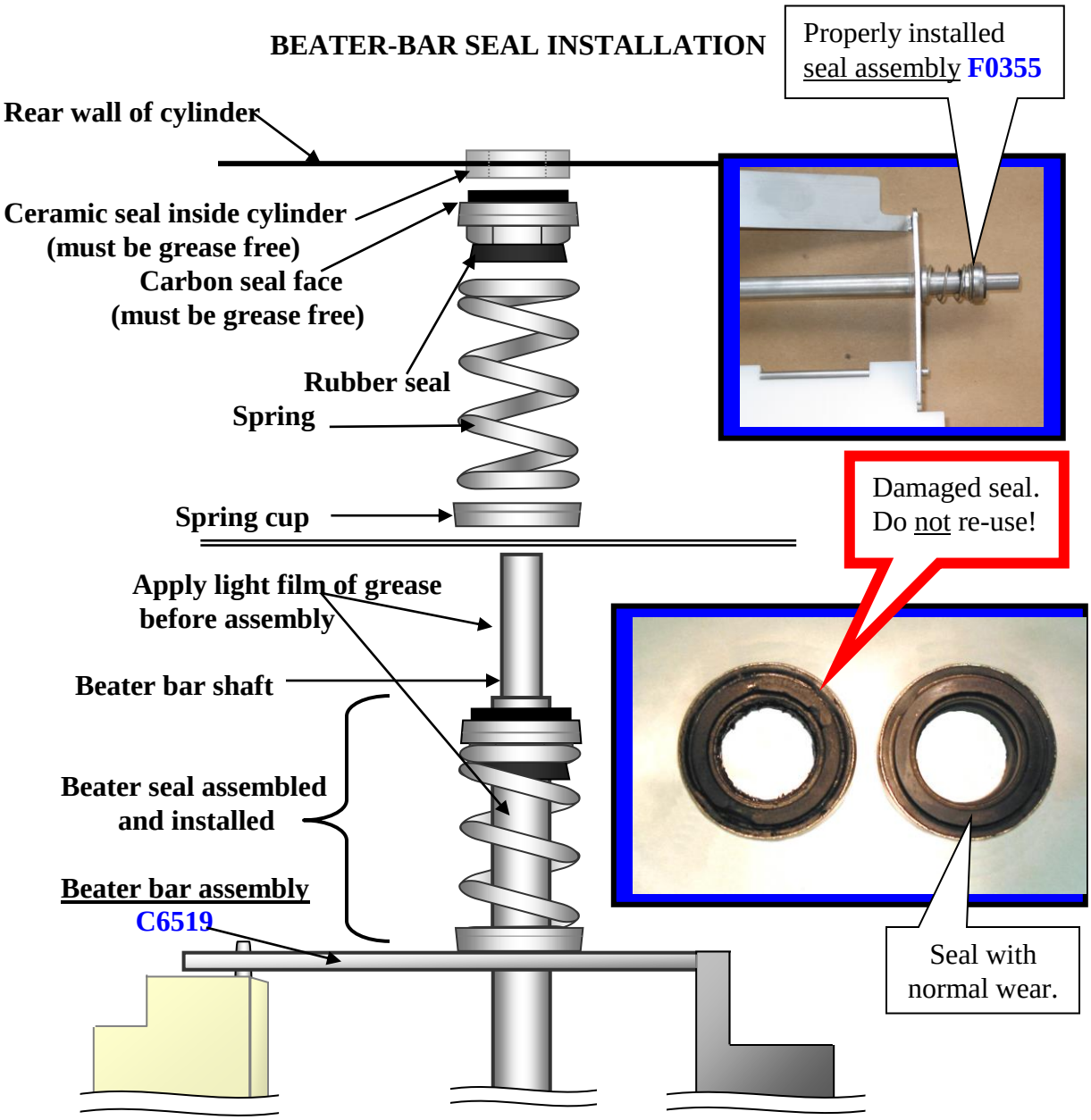

4.13 CERAMIC SEAL REMOVAL AND REPLACEMENT

Note: Use this procedure only when necessary to replace a damaged ceramic seal

To remove old seal;

1. Press the "Push button" on the puller tool to release the ball bearings.
2. Insert "T" handle through ceramic seal at rear of cylinder.
3. Release "Push button".
4. Quickly pull "T" handle straight out and the ceramic seal will remain on the "T: handle as shown above.

Notice: Do not hold button in while pulling "T" handle out.

To install new seal;

1. Apply silicone around rear, **grooved surface**, of ceramic seal (Put lubricant on the smooth side of the seal to prevent the silicone from sticking)
2. Press seal into hole at rear of cylinder. Silicone coated surface goes in first.
3. Gently tap ceramic ring with wood or plastic rod (DO NOT USE METAL!) until the seal has completely bottomed out.
4. The smooth surface of the ceramic seal must be completely clean in order to provide proper sealing when the beater bar with spring seal is installed.
5. If possible allow at least **four hours drying time** for silicone to cure before filling machine with product
6. Fill machine with product and check for leaks.
7. Machine is ready to run.

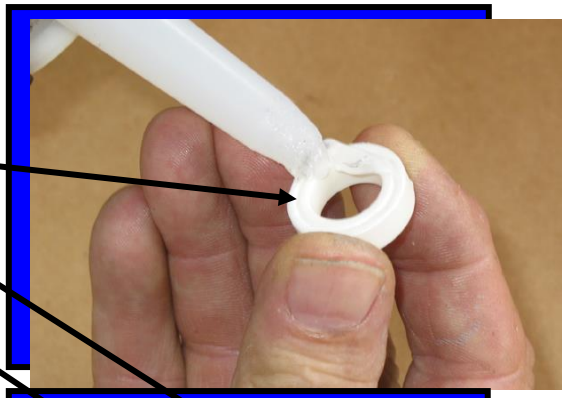

5.0 SPARE PARTS LIST 117A
07/16/07

DESCRIPTION	ITEM NUMBER
Compressor, ¾ H.P.115/60/1	F8053
Run Capacitor	F0135
Start Capacitor	F0213
Start Relay	F0371
Compressor, ¾ H.P. 230/60/1	F8054
Run Capacitor	F0370
Start Capacitor	F0369
Start Relay	F0372
Air Condenser	F127
Bearing Spacer Block	C2316B
Beater Bar	C6519
Beater Bar Spring Seal	F0355
C-Bracket	F1206
C-Bracket Stub	F1207
Contactor	F0478
Drip Tray	F6603
Drip Tray Insert	F6604
Drip Tray Screws	F0905
Drip Tube Brush	F6526
Drive Coupling	C0906
Drive Motor 115V	F0472 (F0409 Obs)
Drive Motor 230V	F0415
Drive Motor Start Capacitor 115V	F0430
Drive Motor Start Capacitor 230V	F0369
Face Plate	C6521
Face Plate Bushing	C6520
Face Plate Knob	F0262
Fan Blade	F5658
Fan Motor 115V	F5559
Fan Motor 230V	F5560
Fan Motor Bracket	F5500
Fan Shroud	F6466
Faucet Assembly	C6513
Faucet Body	C6513B
Faucet Brush	F0326
Faucet Nut	F0197
Faucet Plunger Assembly	C6513P
Faucet Spring	F0564
Fill Light	F0207
Fill Light Switch	F0811
Filter-Dryer	F5595
Float Clip	F0812

Description	Item Number
Float	F0804
Front Cross Brace	F1219
Front Motor Bearing	F0427
Heat Sequencer	F0400
High Pressure Switch	F0661
Hopper Cover	F0498
Left Side Panel	F6436
Mercury Switch	F0752
Motor Adjustment Bracket	F1225
Motor Spring Bracket	F1239
O-Ring, Face Plate	F0357
O-Ring, Faucet	F0491
O-Ring, Fill Switch	F0161
Panel Louver	F0254
Petro-Gel	F0298
Puller Tool	F0012
Rear Bearing Carrier	C1216
Rear Panel	F6438
Rear Support Bearing	F0479
Right Side Panel	F6437
Sanitizer	F0492
Scraper Blade	C6510
Scraper Blade Spring	F6517
Sign Panel	F0170
Spring Seal Ceramic Ring	F0665
Stainless Steel Legs	F0800
Switch Nut	F7003
Switch, 2-Position, Bottom	F0417
Switch, 3-Position, Top	F0416
Tension Spring	F0432
Thermostat	F0401
Transformer-115V/230V	F4995

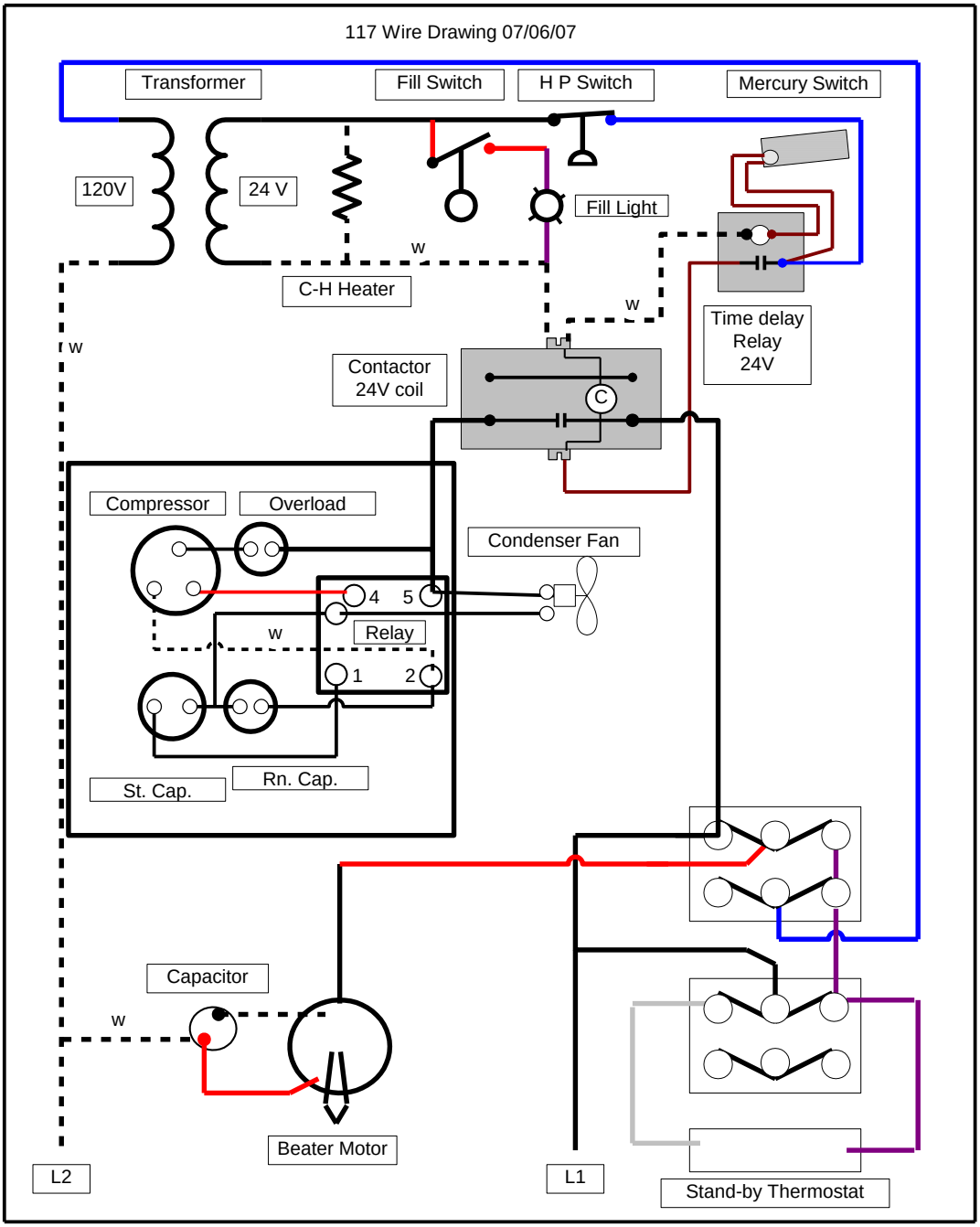

Pg

Frosty Factory Of America Inc. Manufacturer of Frozen Beverage Dispensers Sorbeteer 2301 So. Farmerville St (318)255-1162 Ruston, La. 71270 (318)255-1172 Fax	Description: 117 Wire Drawing		REV	Description	Date / By
	Scale: None	Date: 10/06/03			
	Drawn By: R. Falcone	File name			

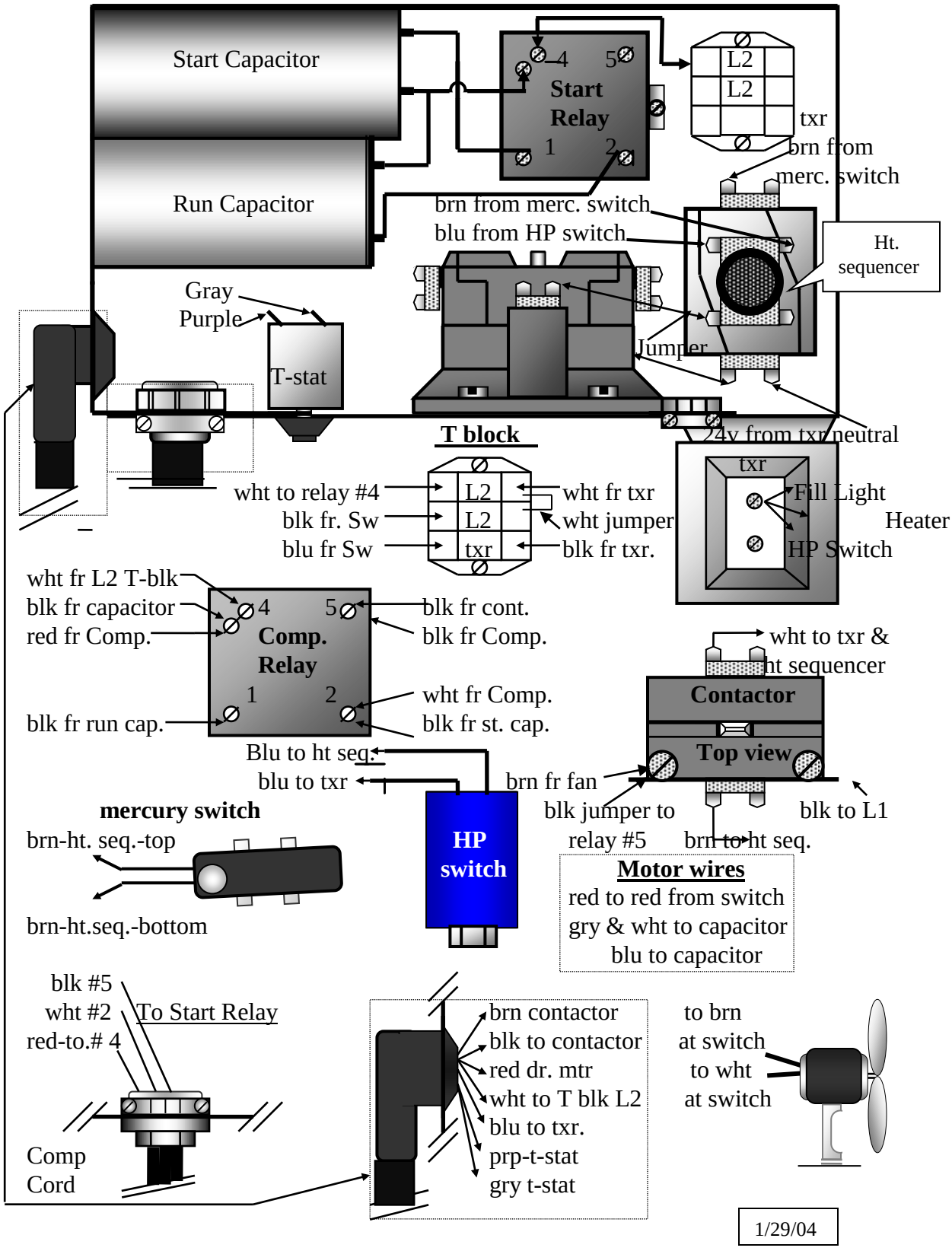
Start Capacitor
Run Capacitor
4
5
Start Relay
1
2
L2
L2
txr
brn from merc. switch
brn from merc. switch
blu from HP switch
Ht. sequencer
Gray
Purple
T-stat
Jumper
T block
24v from txr neutral
txr
wht to relay #4
blk fr. Sw
blu fr Sw
L2
L2
txr
wht fr txr
wht jumper
blk fr txr.
Fill Light
Heater
HP Switch
wht fr L2 T-blk
blk fr capacitor
red fr Comp.
4
5
Comp. Relay
1
2
blk fr cont.
blk fr Comp.
blk fr run cap.
wht fr Comp.
blk fr st. cap.
wht to txr &
ht sequencer
Contactor
Top view
Blu to ht seq.
blu to txr
brn fr fan
blk jumper to relay #5
brn to ht seq.
blk to L1
mercury switch
brn-ht. seq.-top
brn-ht.seq.-bottom
HP switch
Motor wires
red to red from switch
gry & wht to capacitor
blu to capacitor
blk #5
wht #2
red-to.# 4
To Start Relay
Comp Cord
brn contactor
blk to contactor
red dr. mtr
wht to T blk L2
blu to txr.
prp-t-stat
gry t-stat
to brn at switch
to wht at switch
1/29/04

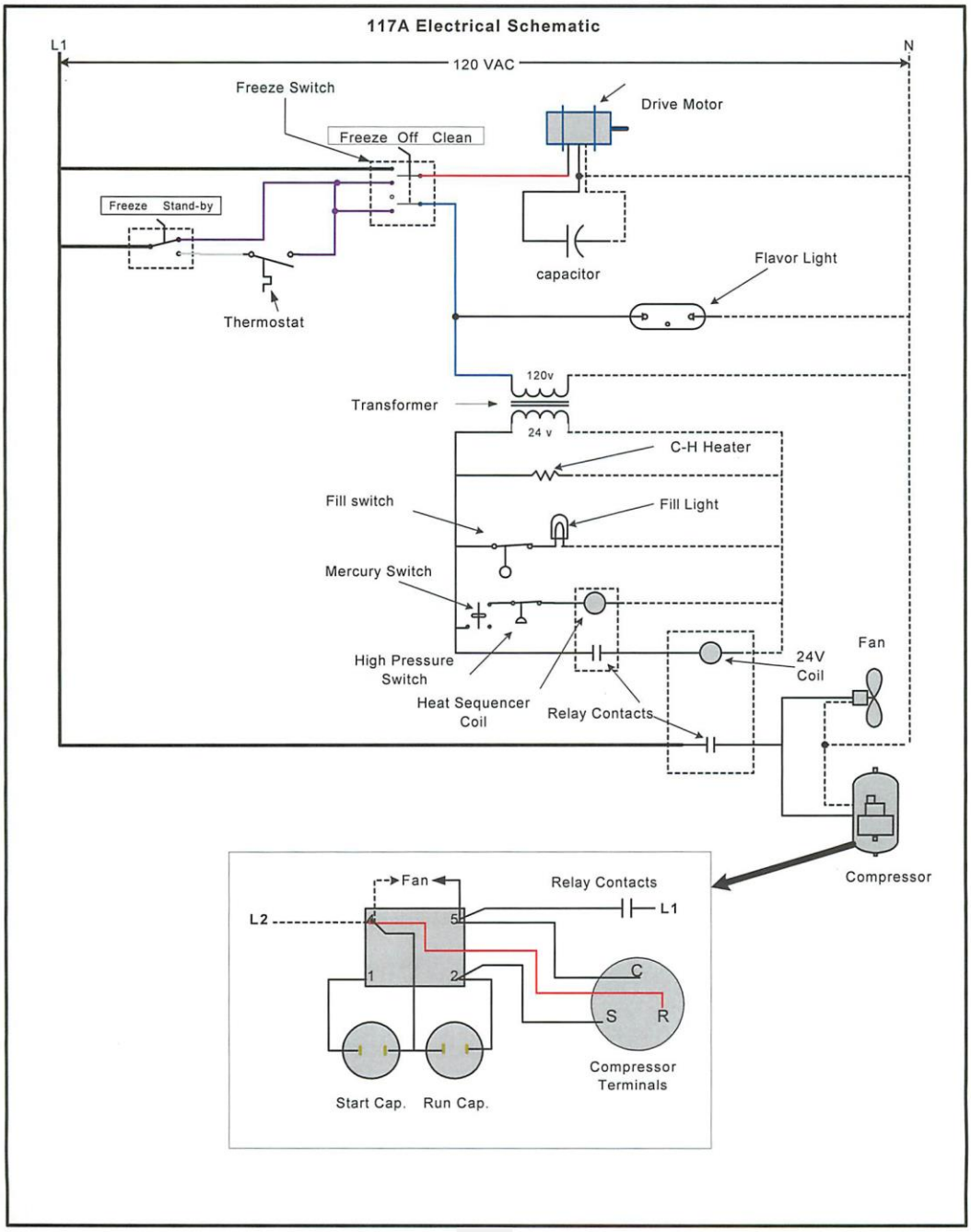
117A Electrical Schematic
L1
N
120 VAC
Freeze Switch
Freeze Off Clean
Drive Motor
Freeze Stand-by
capacitor
Flavor Light
Thermostat
120v
Transformer
24 v
C-H Heater
Fill switch
Fill Light
Mercury Switch
High Pressure Switch
Heat Sequencer Coil
Relay Contacts
24V Coil
Fan
Compressor
Fan
Relay Contacts
L2
L1
5
1
2
C
S
R
Compressor Terminals
Start Cap.
Run Cap.

8.0 FACTORY ASSISTANCE

Before you call the factory for help check the following items to be sure that you have not overlooked something;

(1) If the drive motor or compressor does not operate when the switches are placed in the right (Snowflake) position, then;

A. Make certain that the machine is plugged in.
B. Check that the circuit breaker in your electrical panel has not been tripped.
C. Allow approximately 2 minutes for the compressor delay timer to activate.
D. Make sure that the machine is level.

(2) If the unit operates normally but the product does not freeze to the consistency desired;

A. Make sure that there is at least 6 to 8 inches clearance around your machine to prevent the unit from re-circulating hot air.
B. Make sure that the condenser at the back of the machine is completely clean of lint and dust. If lint or dust is present it can be vacuumed with a soft brush attachment.
C. If necessary, slightly turn the mix adjustment screw (TCC) "clockwise" to thicken the mix. Repeat if necessary.

(3) If the machine makes a "Knocking" sound during the freezing process, then;

A. There is too much water in the recipe **or** the mix has begun to separate. The machine will let you know by making a "knocking" sound.
B. To determine if there is a problem with the mix, turn the upper switch to the left. If the knocking stops after about 2 minutes, there is a problem with the recipe. Turn the switch to the right and allow the freezing process to continue. If the knocking returns it can be cleared by repeating the same steps. Correct the recipe as soon as possible.

(4) If product is leaking from the drip tube (just below the serving handle), then;

A. The spring seal may not be clean or may be improperly installed.
B. Review the installation procedures in the manual and refer to the decals on the lid for proper assembly procedures. Be sure that both parts of the seal are completely clean and that there is no lubricant (grease) or dried product on the seal or on the ceramic ring inside the freezing chamber.

(5) If you must call the factory for assistance;

Locate the Model and Serial Numbers, of your machine, on the data plate on the back panel. Fill a cup with product from the serving faucet and use a thermometer to find the temperature. Have this information available before you contact the factory.

Frosty Factory of America Inc.
2301 So. Farmerville St.
Ruston, La. 71270
(800) 544-4071

WARRANTY

Frosty Factory of America, Inc., the warrantor, providing that the conditions set forth herein are met by the Purchaser-User, warrants to the original purchaser-user that Frosty Factory Frozen Drinks machines, herein referred to as the "unit" is free from defects in factory workmanship and materials. This warranty is for the period of one year on all components of the unit with the exception of the compressor and the evaporator, which has a warranty period of five years. Also excluded are normal maintenance items i.e. O-rings, seals, belts, etc. During the warranty periods, Frosty Factory of America, Inc., agrees to repair or replace (at its option) without cost to purchaser-user except transportation charge any part or parts of said unit proved to the satisfaction of Frosty Factory of America, Inc. to be defective when sold. The warrantor shall not be responsible for any expenses incurred for service or repairs performed by a person or entity other than the Warrantor, unless specifically authorized by the Warrantor, and the repair falls in the 1 year labor warranty period. Past 1 year, service calls or repairs other than those covered by the conditions set forth in this Warranty will be made at the expense of the original Purchaser-User.

This warranty is in lieu of all other warranties, express or implied, including any warranties of merchantability or fitness for a particular use, and releases Frosty Factory of America, Inc. from all other obligations whatever. Frosty Factory of America, Inc. neither assumes nor authorizes any other person to assume from the warrantor any other liability in connection with the identified unit. This warranty is not assignable. "Original Purchaser-User" shall mean only such person or entity for which the identified unit is originally purchased and installed. Return of the OWNER'S WARRANTY CARD to the Warrantor is required for warranty coverage. If not received by the warrantor, warranty coverage begins the date of shipment.

All inquiries to our Factory about unit must be accompanied by the unit serial number.

This warranty does not apply to damage to said unit occurring in transit, or damage caused by unauthorized alternations, fire, accidents, artificially generated electric currents, Acts of God, misuse or abuse, or by any other cause whatsoever other than defects in Factory workmanship or material. This warranty does not apply to damage or loss of any products, refrigerant, property, or loss of income or profits due to the malfunctioning of said unit, nor to transportation or special charges for state sales or other taxes. This warranty also does not cover issues that are caused by lack of maintenance that is to be performed weekly as per cleaning instructions, nor is the adjustment of the viscosity for product thickness. ***01/2016***