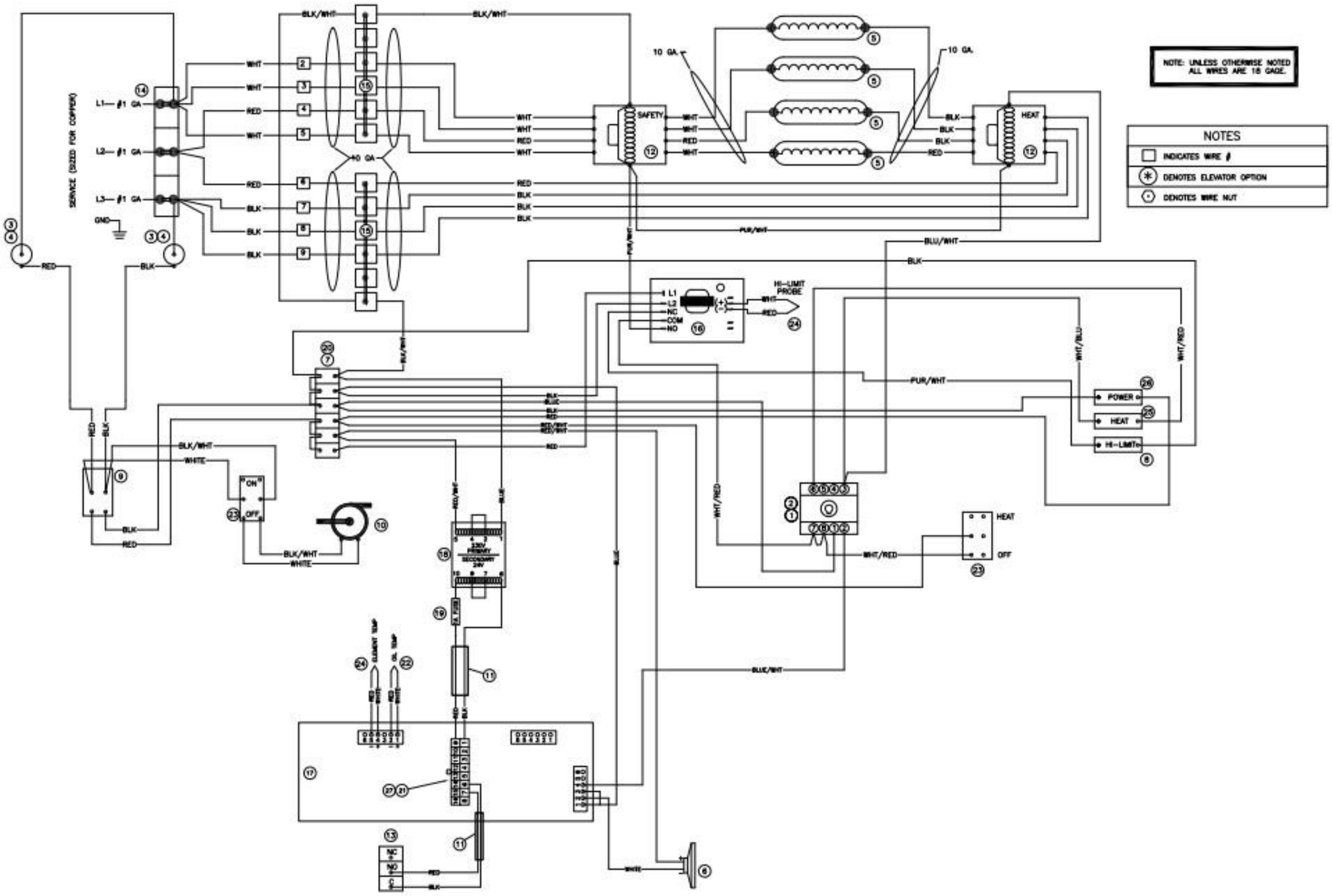

WIRING DIAGRAM EOF-20/20 LEFT FRYER 208-240/60/3

WITH SUPPLY POWER FOR FILTER PUMP/COMPUTER COOKER/LOW OIL PROTECTION

39391-D
9/6/07

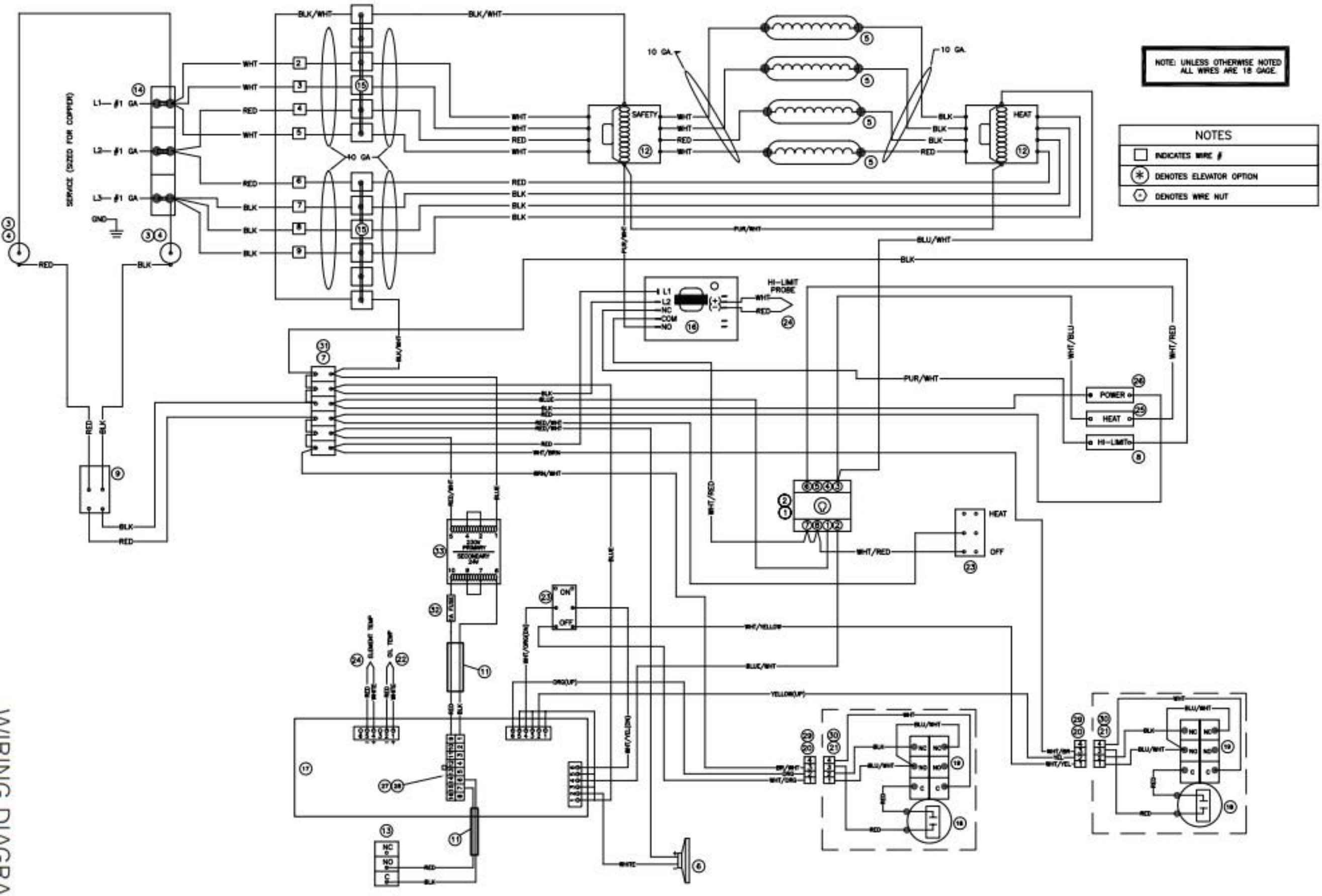

WIRING DIAGRAM RIGHT FRYER EOF-20/20 208-240/60/3

WITH SUPPLY POWER FOR FILTER PUMP/COMPUTER COOKER/LOW OIL PROTECTION

39392-D
9/6/07

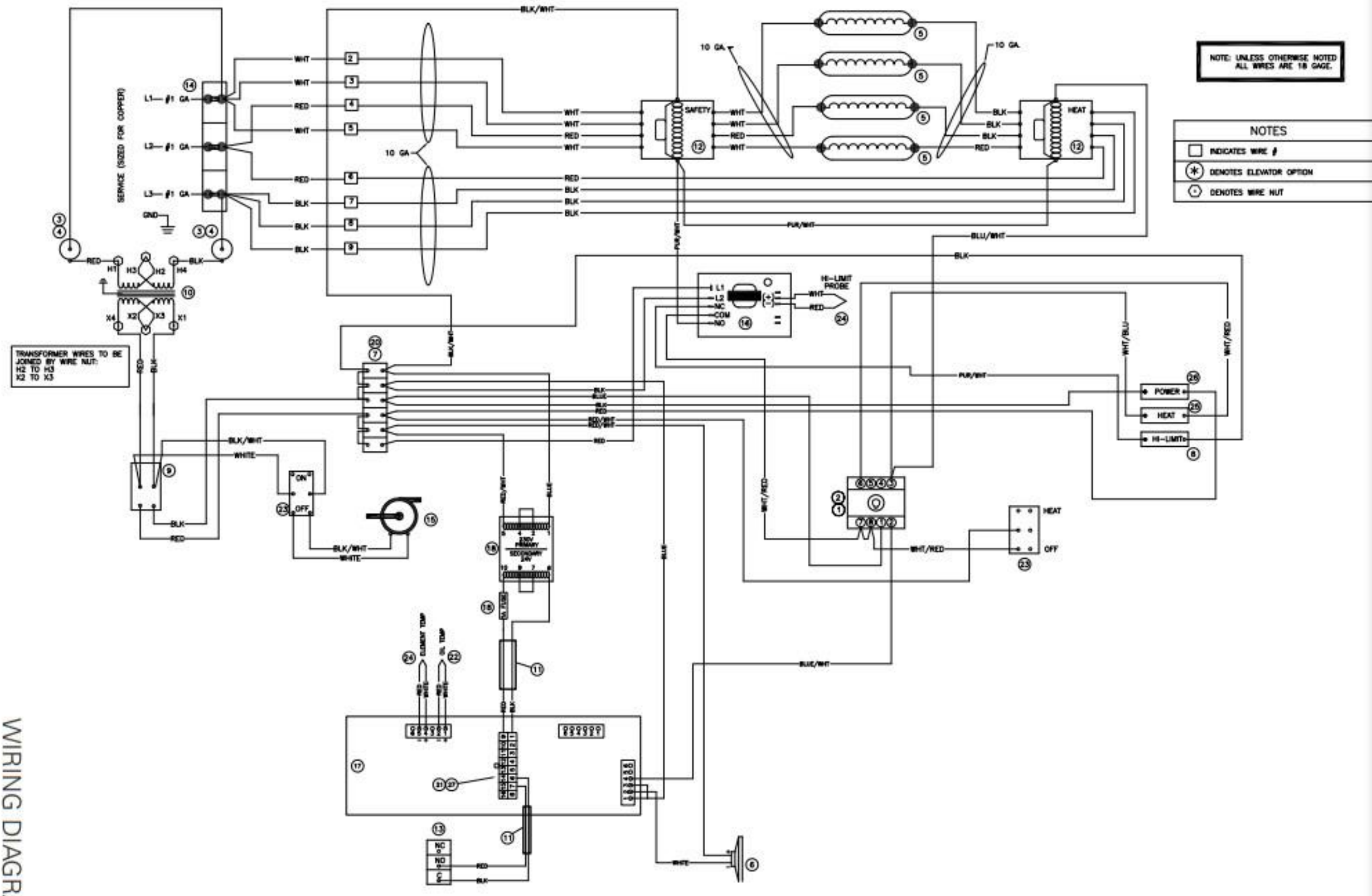

WIRING DIAGRAM LEFT FRYER EOF-20/20 480/60/3

WITH SUPPLY POWER FOR FILTER PUMP/COMPUTER COOKER/LOW OIL PROTECTION

39393-D
9/6/07

WIRING DIAGRAM P/N:39292-

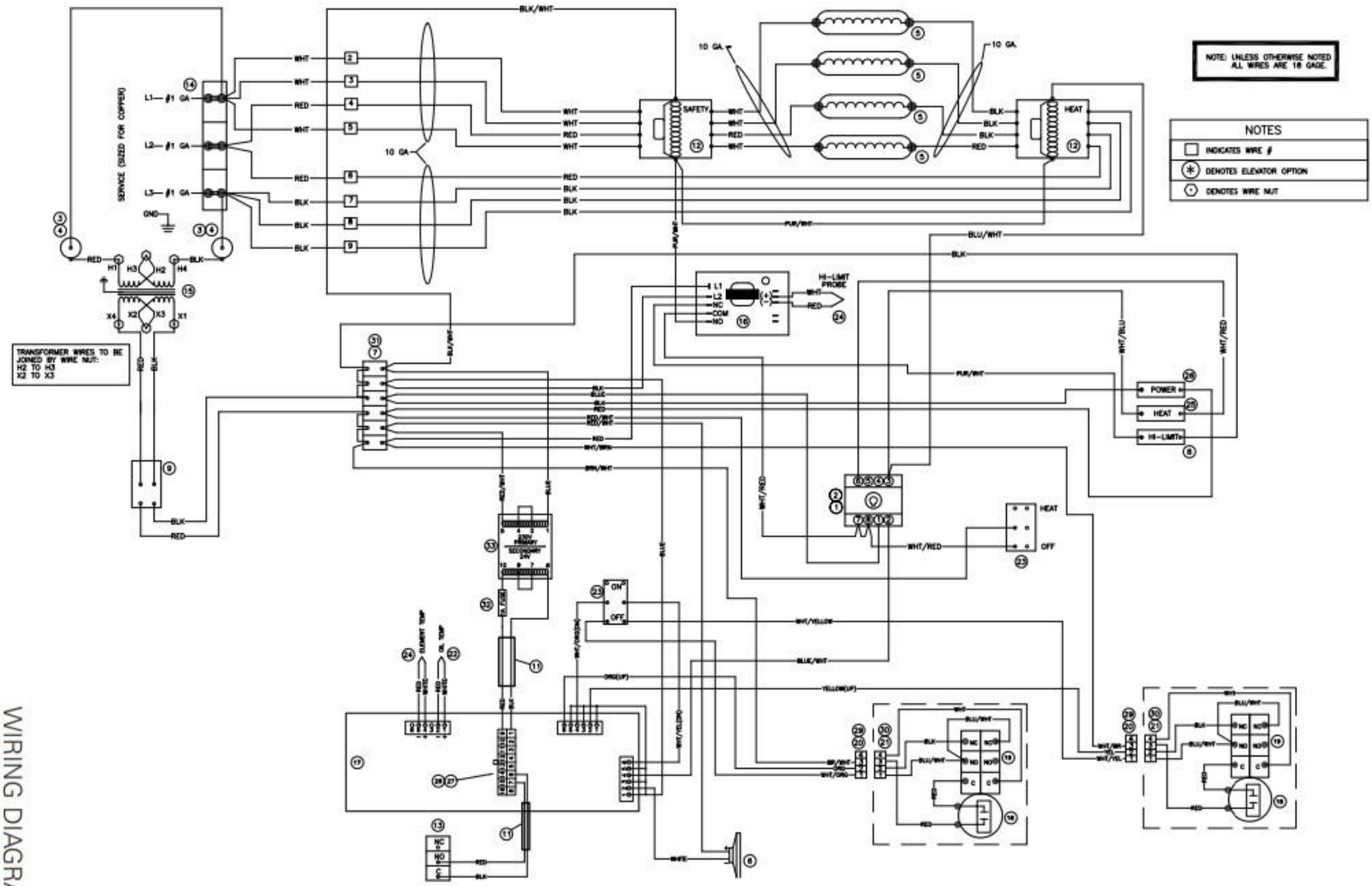

WIRING DIAGRAM RIGHT FRYER EOF-20/20 480/60/3

WITH SUPPLY POWER FOR FILTER PUMP/COMPUTER COOKER/LOW OIL PROTECTION

39394-0
9/6/07

WIRING DIAGRAM P/N: 39293