Parts Catalog

S13

S-Series Slicer
Manual
Model: S13

05/25/2021 Rev. AB
IMPORTANT!
TO EXPEDITE SHIPMENT OF PARTS, ALWAYS SPECIFY MODEL, REV, PART NUMBER, AND SERIAL NUMBER OF UNIT.

GLOBE FOOD EQUIPMENT COMPANY
2215 East River Road
Dayton, Ohio 45439

Parts Department
Toll Free 1-800-745-6238 · Fax (937) 290-0585
E-Mail: info@globefoodequip.com
Website: www.globefoodequip.com

Not for resale

© Globe Food Equipment Company, 2021

995106 ECN 0620

Table of Contents

Description	Page
S13 Knife Drive Assembly Components	4
S13 Index Knob Components	6
S13 Base Shroud Components	8
S13 Gauge Plate Components	10
S13 Index Slide Assembly Components	12
S13 Ring Guard Assembly Components	14
S13 Electrical Base Components	16
S13 Knife Drive Motor Components	18
S13 Transport Arm Assembly Components	20
S13 Lift Lever Base Components	22
S13 Carriage and End Weight Assembly Components	24
S13 Knife and Knife Cover Components	26
S13 Sharpener Assembly Components	28
S13 Removable Carriage Components - Option	30
S13 Knife Removal Tool - Option	32
S13 Removable Knife Kit - Option	34
S13 Removable Knife Drive Kit - Option	36
S13 Wiring Schematic	38

S13 Knife Drive Assembly Components

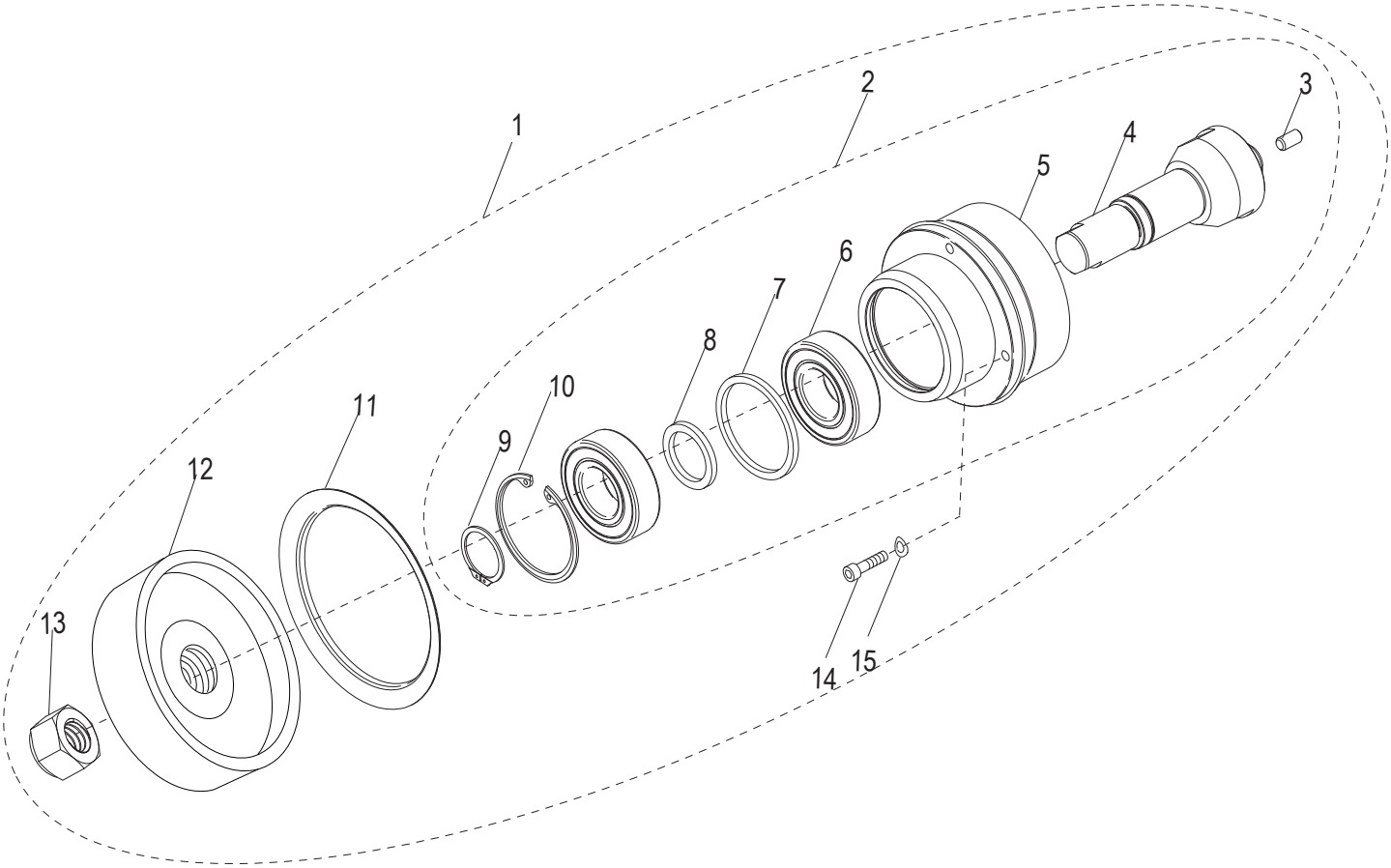

© Globe Food Equipment Company

S13 Knife Drive Assembly Components

Item	Part Number	Description	Qty	Serial Number
1	450211	Knife Drive Assembly (Incl. items 2-15)	1	
2	420088	Knife Drive Bearing Assembly (Incl. items 3-10)	1	
3	510078	Knife Cover Bumper	1	
4		Shaft, Knife Drive	1	
5		Knife Drive Bearing Mount	1	
6		Ball Bearing, Sealed	2	
7		Outer Ring, Bearing Spacer	1	
8		Inner Ring, Bearing Spacer	1	
9		Retaining Ring 5101-98 Bowed External	1	
10		Retaining Ring N5002-200	1	
11	520244	Knife Drive Boot	1	
12	450115	Knife Drive Pulley	1	
13	510033	Nut 7/8-20 Hex (Zinc)	1	
14	810229	Socket Hd. 1/4-20x3/4 Cap Screw, SST	4	
15	810275	Bellville Disc Spring Washer .255 ID x .50 OD	4	

© Globe Food Equipment Company

S13 Index Knob Components

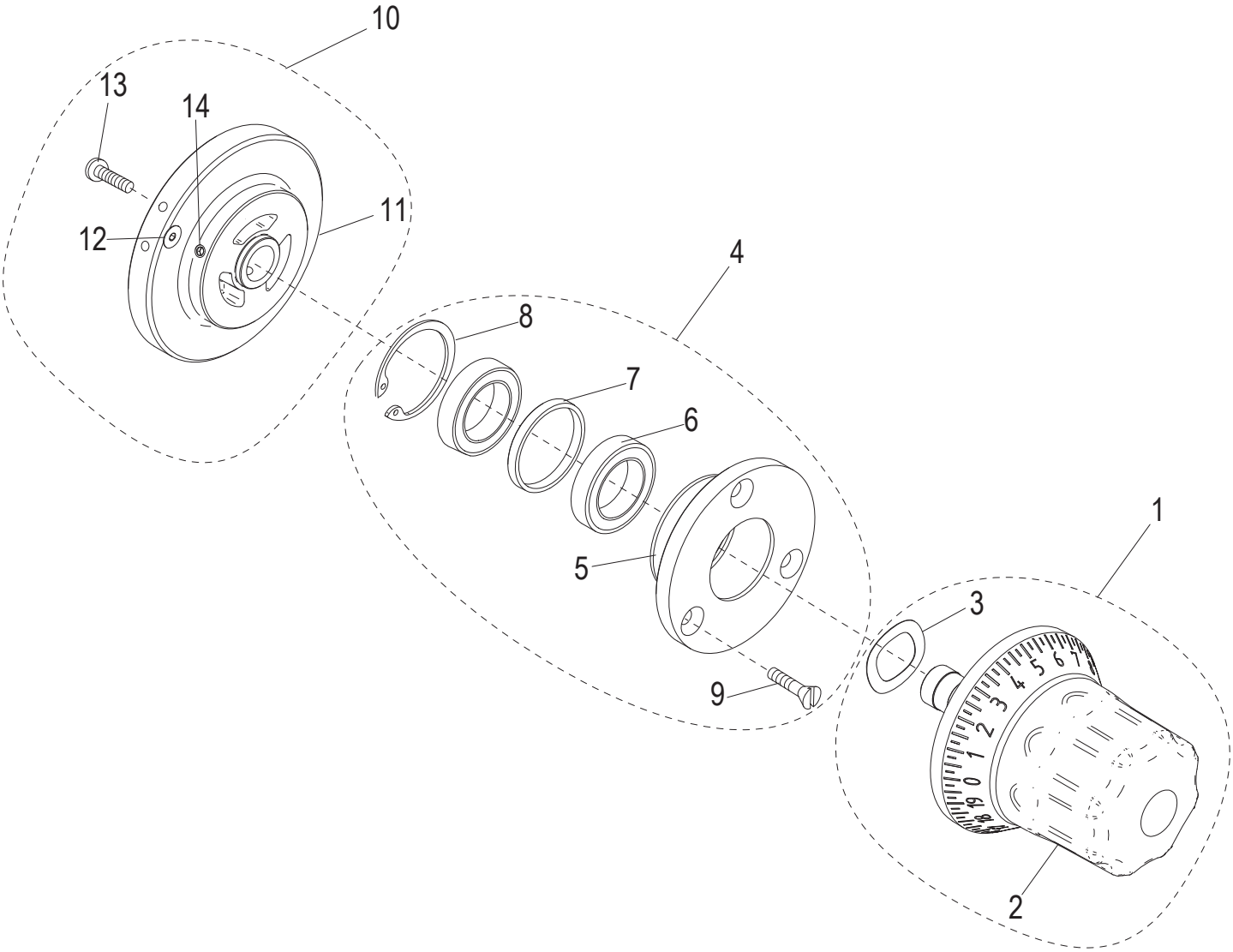

© Globe Food Equipment Company

S13 Index Knob Components

Item	Part Number	Description	Qty	Serial Number
1	500044	Index Knob Assembly (Incl. items 2-3)	1	
2	500022	Index Knob	1	
3	800136	Index Knob Tension Spring	1	
4	450214	Index Bearing Hub Assembly Kit (Incl. items 5-9)	1	
5		Index Knob Bearing Hub	1	
6		Index Knob Bearing	2	
7		Spacer, Index Bearing	1	
8		Beveled Retaining Ring	1	
9	800104	Mach. Screw #10-24x5/8 Flat Hd Slotted	3	
10	500050	Index Cam Assembly (Incl. items 11-14)	1	
11	520350	Index Cam	1	
12		Socket Cap Screw #10-32x3/4 Flat Hd (SS)	1	
13	800105	Socket Cap Screw #10-32x5/8 Button-Hd	1	
14		Set Screw, Knurl Grip Cup Pt 1/4-28x3/4 (SST)	3	

© Globe Food Equipment Company

S13 Base Shroud Components

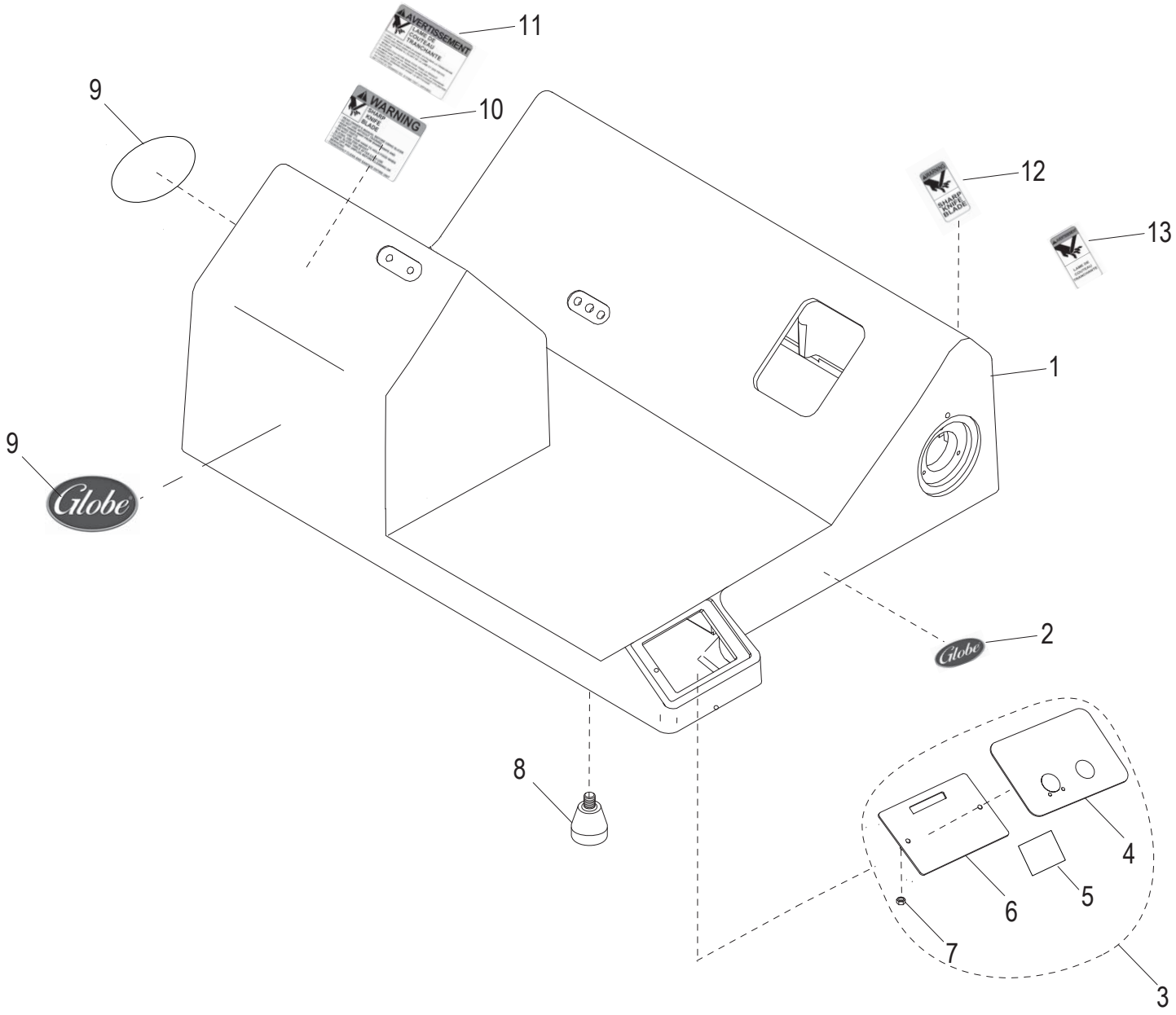

© Globe Food Equipment Company

S13 Base Shroud Components

Item	Part Number	Description	Qty	Serial Number
1		Slicer Base	1	
2	871-2	Globe Logo Decal 3.5"	1	
3	121070	Membrane Switch Kit (Incls. items 4-7)	1	
4		Membrane Switch, Manual	1	
5	910088	Pad, Alcohol Prep	1	
6		User Interface Panel, Manual	1	
7	810422	Nylon Locknut 6-32	2	
8	510031	Slicer Foot	4	
9	920202	Globe Logo Decal, S-Series	2	
10	920200	Warning Label, Large	1	
11	920198	Warning Label, Large French	1	
12	920201	Warning Label, Small	1	
13	920199	Warning Label, Small French	1	

© Globe Food Equipment Company

S13 Gauge Plate Components

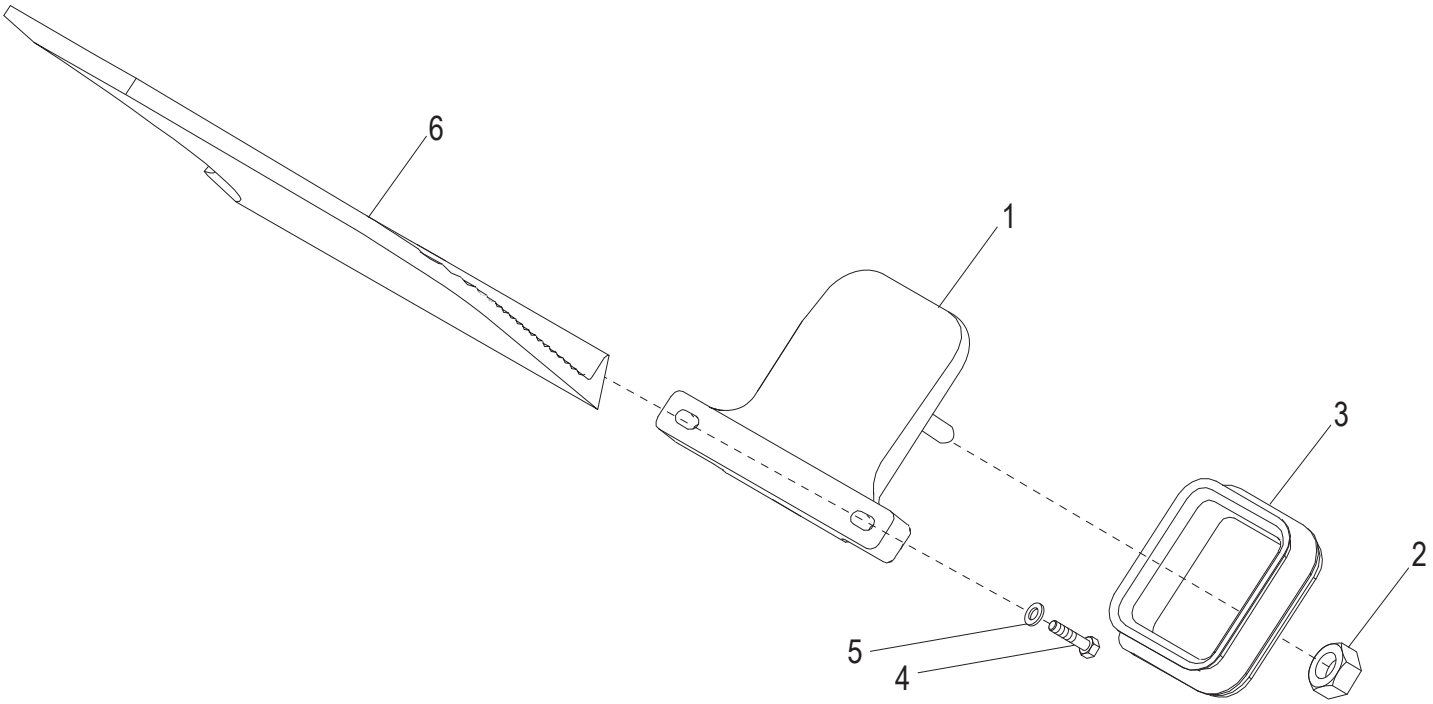

© Globe Food Equipment Company

S13 Gauge Plate Components

Item	Part Number	Description	Qty	Serial Number
1	450212	Gauge Plate Base Assembly	1	
2	450054	Post Nut, Gauge Plate Ball Joint	1	
3	500001	Gauge Plate Seal	1	
4	890411	Cap Screw 3/8-16x1-1/2, Hex Hd with Nylon Patch	2	
5	810228	Flat Washer, fits 3/8 Screw, .885 OD	2	
6	450070	Gauge Plate	1	

© Globe Food Equipment Company

S13 Index Slide Assembly Components

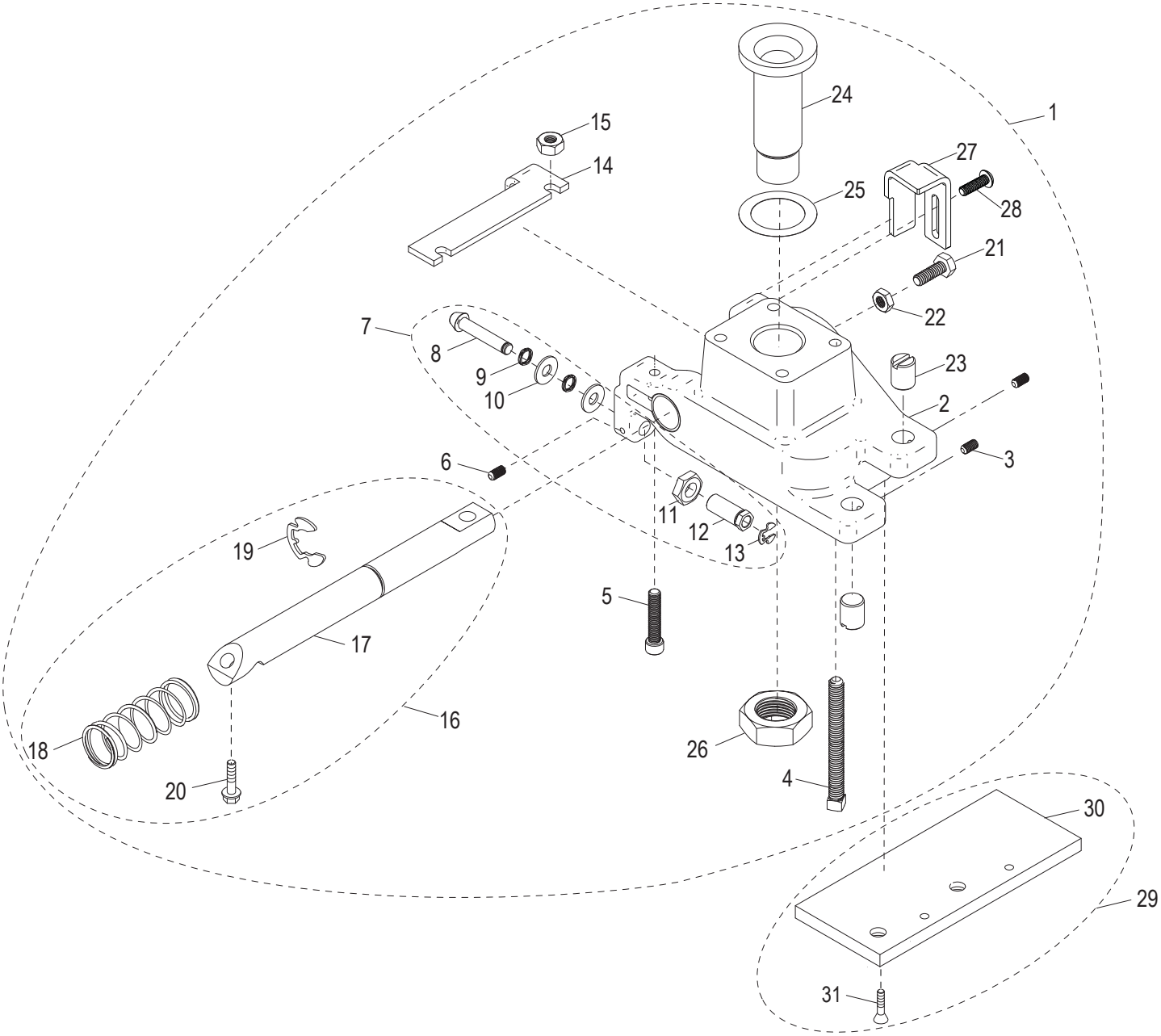

© Globe Food Equipment Company

S13 Index Slide Assembly Components

Item	Part Number	Description	Qty	Serial Number
1	400140	Index Slide Kit (Incl. items 2-28)	1	
2		Index Slide with Bushings	1	
3	810400	Set Screw #10-32x3/8 Cup Pt.	2	
4	800146	Set Screw 5/16-18x3 Sq. Hd Cup Point	4	
5	800144	Cap Screw 1/4-28x1-1/4 Socket Hd	2	
6	800091	Set Screw #8-32 x 3/16 Knurled Grip - Cup Pt.	1	
7	400121	Cam Follower Kit (Incl. items 8-13)	1	
8		Follower	1	
9		Wave Spring Cam Follower	2	
10		Flat Washer .266 ID, .625 OD Type A	2	
11	890390	Jam Nut 3/8-24 Sharpener Wheel	1	
12		Follower Adjustment Post	1	
13	810379	Retaining Clip Ring 5304-18	1	
14		Stop Plate, Tilt Back	1	
15	800145	Nut 1/4-28 Hex	2	
16	400122	Index Slide Shaft Kit (Incl. items 17-20)	1	
17		Index Slide Shaft	1	
18		Index Spring	1	
19	800152	Retaining Ring (Klipring) 5304-75	1	
20	800058	Washer 5/16-18-1 Hex Hd Tapping Screw	2	
21	810431	Cap Screw 1/4-20 x 3/4 Hex Hd	1	
22	810432	Nut, Thin 1/4-20 Hex	1	
23	450057	Screw, Anti-Rotation	2	
24	450050	Ball Joint Rest	1	
25	800168	Gauge Plate Spacer Kit (Kit of 4)	1	
26	800043	Nut 7/8-14 UNF Hex Jam	1	
27	300154	Adjustment Stop	1	
28	800105	Socket Cap Screw #10-32x5/8 Button-Hd	2	
29	400128	Anti-Rotation Plate Kit (Incl. items 29-31)	1	
30		Anti-Rotation Plate	1	
31	810003	Screw 1/4-20x3/4 Crossed Rec., Flat Hd, Tapping	2	

© Globe Food Equipment Company

S13 Ring Guard Assembly Components

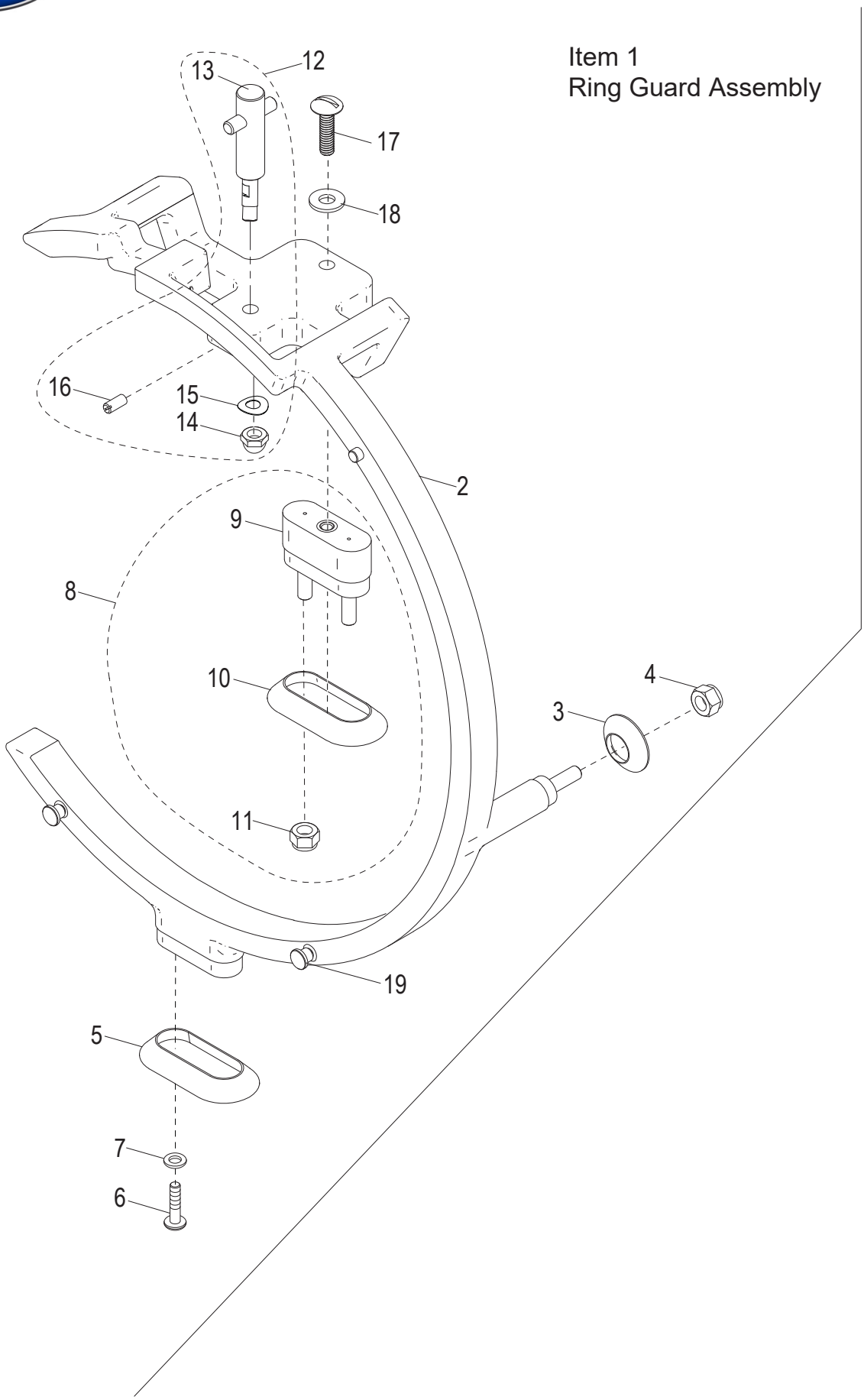

© Globe Food Equipment Company

S13 Ring Guard Assembly Components

Item	Part Number	Description	Qty	Serial Number
1	500047	Ring Guard Assembly Kit (Incl. items 2-19)	1	
2	520316	Ring Guard	1	
3	520243	Round Boot, Ring Guard	1	
4	810438	Nylon-Insert Nut 1/4-20 Grade 5 Stl Zinc Plated	1	
5	520242	Oval Boot, Ring Guard	1	
6	810358	Mach. Screw 1/4-20x1 Truss Hd Slotted	2	
7	810345	Flat Washer 1/4 Screw Thread (18-8 SST)	2	
8	450213	Ring Guard Spacer Assembly (Incl. items 9-11)	1	
9	460064	Spacer, Ring Guard	1	
10	520242	Oval Boot, Ring Guard	1	
11	810438	Nylon-Insert Nut 1/4-20 Grade 5 Stl Zinc Plated	2	
12	460069	Sharpener Mount Assembly Kit (Incl. items 13-16)	1	
13		Sharpener Mount Assembly	1	
14	800185	Acorn Nut, 1/4-28 SST	1	
15	800184	Curved Disk Spring, 1/4" Rod Size	1	
16	810483	Slotted Set Screw 10-32	1	
17	810358	Mach. Screw 1/4-20x1 Truss Hd Slotted	1	
18	810345	Flat Washer 1/4 Screw Thread (18-8 SST)	1	
19	450130	Locator Pin	2	

© Globe Food Equipment Company

S13 Electrical Base Components

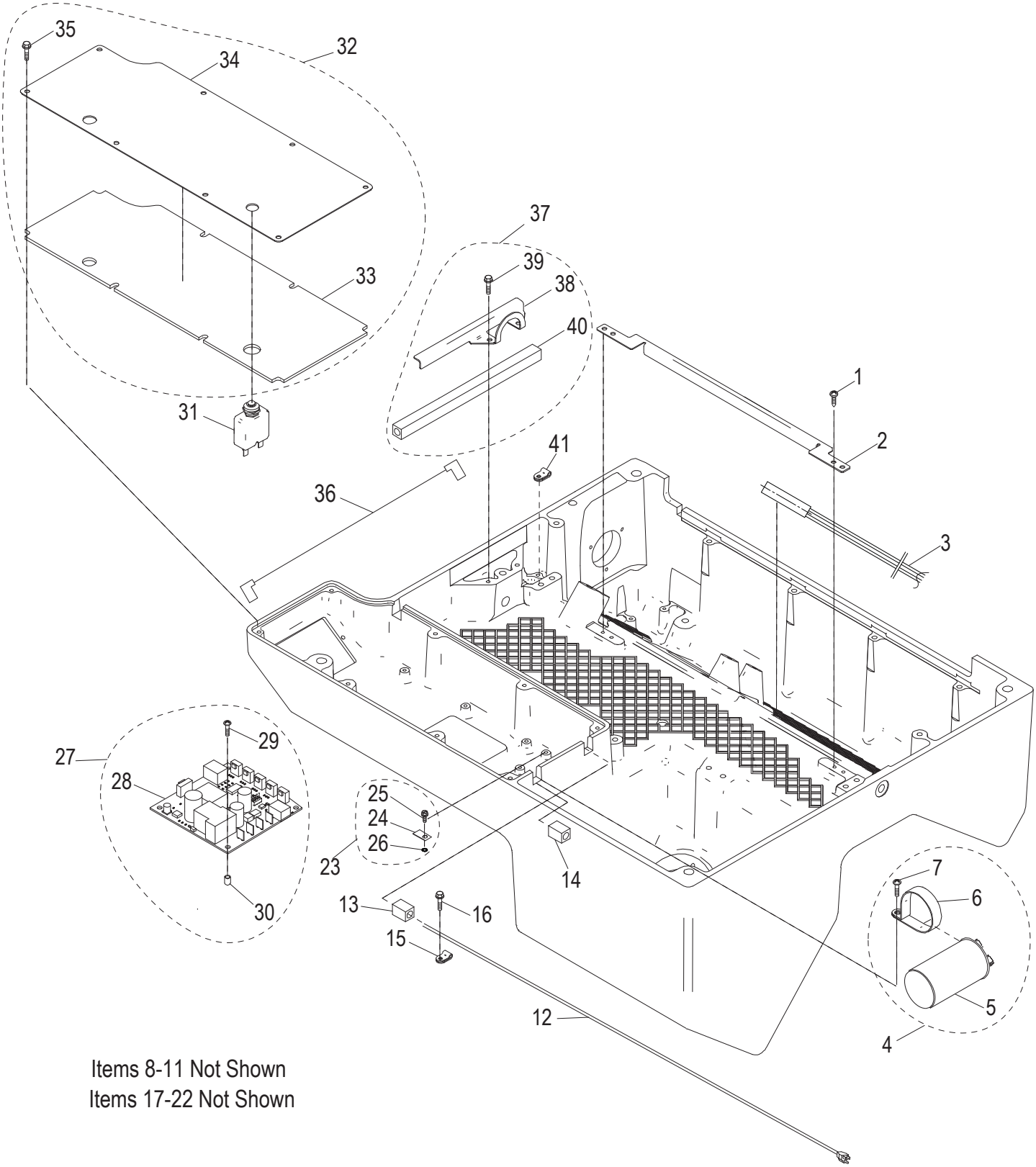

Items 8-11 Not Shown
Items 17-22 Not Shown

© Globe Food Equipment Company

S13 Electrical Base Components

Item	Part Number	Description		Qty	Serial Number
1	800069	Screw #8-32x3/8 Cross Rec. Pan Hd. Tapping		4	
2	310208	Inner Wireway Cover		1	
3	110107	Harness, Reed Switch, Knife Cover Sensor		1	
4	121082-01	Capacitor Clamp Kit	(Incl. items 5-7)	1	
5		Capacitor, Knife Motor (120V)	(Fot Use w/120V Units)	1	
6	110228	Capacitor Clamp		1	
7	800069	Screw #8-32x3/8 Cross Rec. Pan Hd. Tapping		1	
8	121082-02	Capacitor Clamp Kit	(Incl. items 9-11) Not Shown	1	
9		Capacitor, Knife Motor (220V)	Not Shown	1	
10	110229	Capacitor Clamp	Not Shown	1	
11	800069	Screw #8-32x3/8 Cross Rec. Pan Hd. Tapping	Not Shown	1	
12	130225	Power Supply Cord, 120VAC, 15A		1	
13	510045-01	Sleeve, Large Diameter Wire		1	
14	510044-01	Sleeve, Small Diameter Wire		1	
15	110227	Strain Relief, Power Cord		1	
16	800057	Screw 1/4-20x.75 Hex Washer Hd Tapping		1	
17	130008-01	Power Cord (220V)	Not Shown	1	
18		Power Supply Cord	Not Shown	1	
19		Male Power Plug, Europe CEE7/7, 50Hz	Not Shown	1	
20	130008-02	Power Cord (220V)	Not Shown	1	
21		Power Supply Cord	Not Shown	1	
22		Three Blade Male Plug, NEMA 3-15, 60Hz	Not Shown	1	
23	121080	Ground Location Tab Kit	(Incl. items 24-26)	1	
24		Ground Location Tab		1	
25		Screw, Green #8-32x5/16" SL Hex Washer Hd		1	
26		Lock Washer #8 External Tooth		1	
27	121087	Manual Control Board	(Incl. items 28-30)	1	
28	121060	Control Board Assembly		1	
29	800175	Screw #8-32x3/4 Crossed Recessed Tapping		4	
30	810450	Self Retaining Spacer		4	
31	140017-01	Circuit Breaker (120V)		1	
31	140017-02	Circuit Breaker (220V)	Not Shown	1	
32	300063	Electronics Cover & Gasket Kit	(Incl. items 33-35)	1	
33		Gasket, Electronic Cover		1	
34		Cover, Electronics		1	
35	800067	Screw #10-24x1/2 Hex Washer Hd Tapping		8	
36	100125	Wire Harness, Circuit Breaker		1	
37	300067	Front Wireway Cover Kit	(Incl. items 38-40)	1	
38		Cover, Front Wireway		1	
39	800067	Screw #10-24x1/2 Hex Washer Hd Tapping		2	
40	510044-02	Sleeve, Small Diameter Wire		1	
41	110226	Clamp, Nylon Loop		1	

© Globe Food Equipment Company

S13 Knife Drive Motor Components

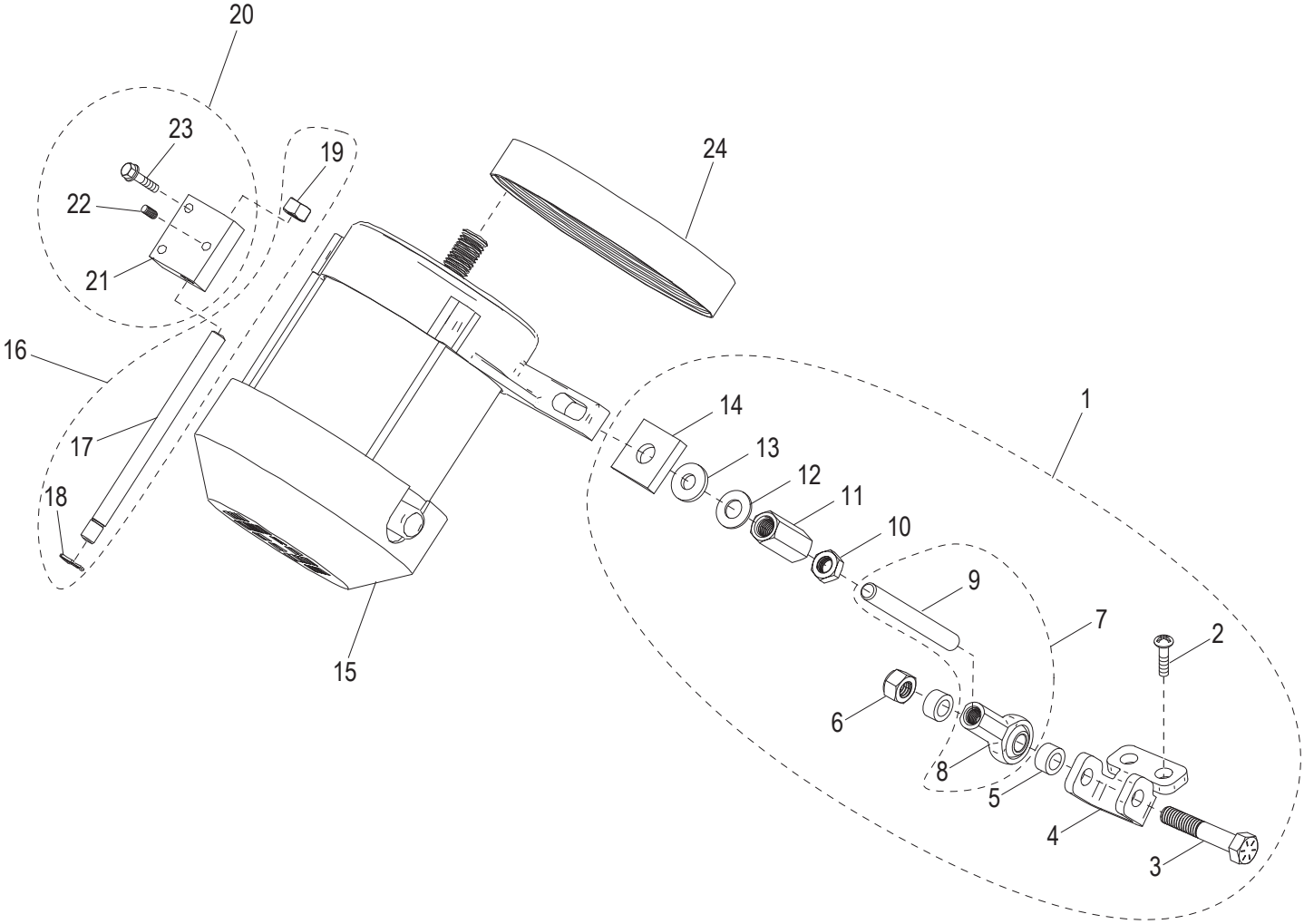

© Globe Food Equipment Company

S13 Knife Drive Motor Components

Item	Part Number	Description		Qty	Serial Number
1	400124	Knife Tensioner Kit	(Incl. items 2-14)	1	
2	800135	Thread Forming Screw 1/4-20x5/8 PHP		2	
3		Cap Screw 5/16-18 x 1-3/4, Grade 8 Hex Hd		1	
4		Knife Motor Tensioner Bracket		1	
5		Sleeve Spacer		2	
6	810420	Nyloc Nut 5/16-18, Grade 5		1	
7	400125	Threaded Ball Joint, Knife Tensioner	(Incl. items 8-9)	1	
8		Ball Joint Rod End 5/16'-24 Thd		1	
9		Tension Shaft 5/16-24 x 3 Full Thread		1	
10		Nut 5/16-24 UNF Zinc Plated Steel Hex Jam		1	
11		Nut 5/16-24x1 Hex Coupling		1	
12	810416	Flat Washer 5/16 (Zinc)		1	
13	810417	Washer 5/16 Neoprene		1	
14	800161	Washer 5/16 Leveling		1	
15	120158-01	Knife Drive Motor, Single Phase, 120V, 60Hz		1	
15	120158-02	Knife Drive Motor, Single Phase, 220V, 60Hz	Not Shown	1	
15	120158-03	Knife Drive Motor, Single Phase, 220V, 50Hz	Not Shown	1	
16	400113	Motor Mount Pivot Rod Assembly	(Incl. items 17-19)	1	
17		Motor Mount Pivot Rod		1	
18	810429	Retaining Ring, 5304-31 (Klipring)		1	
19	810420	Nyloc Nut 5/16-18, Grade 5		1	
20	400123	Motor Pivot Block Kit	(Incl. items 21-23)	1	
21		Motor Pivot Block		1	
22	800094	Set Screw #10-32x1/4, Knurl-Grip Cup Pt.		1	
23	800068	Washer #10-24x1 Hex Hd Tap. Screw Slotted		2	
24	800092	Knife Drive Belt		1	

© Globe Food Equipment Company

S13 Transport Arm Assembly Components

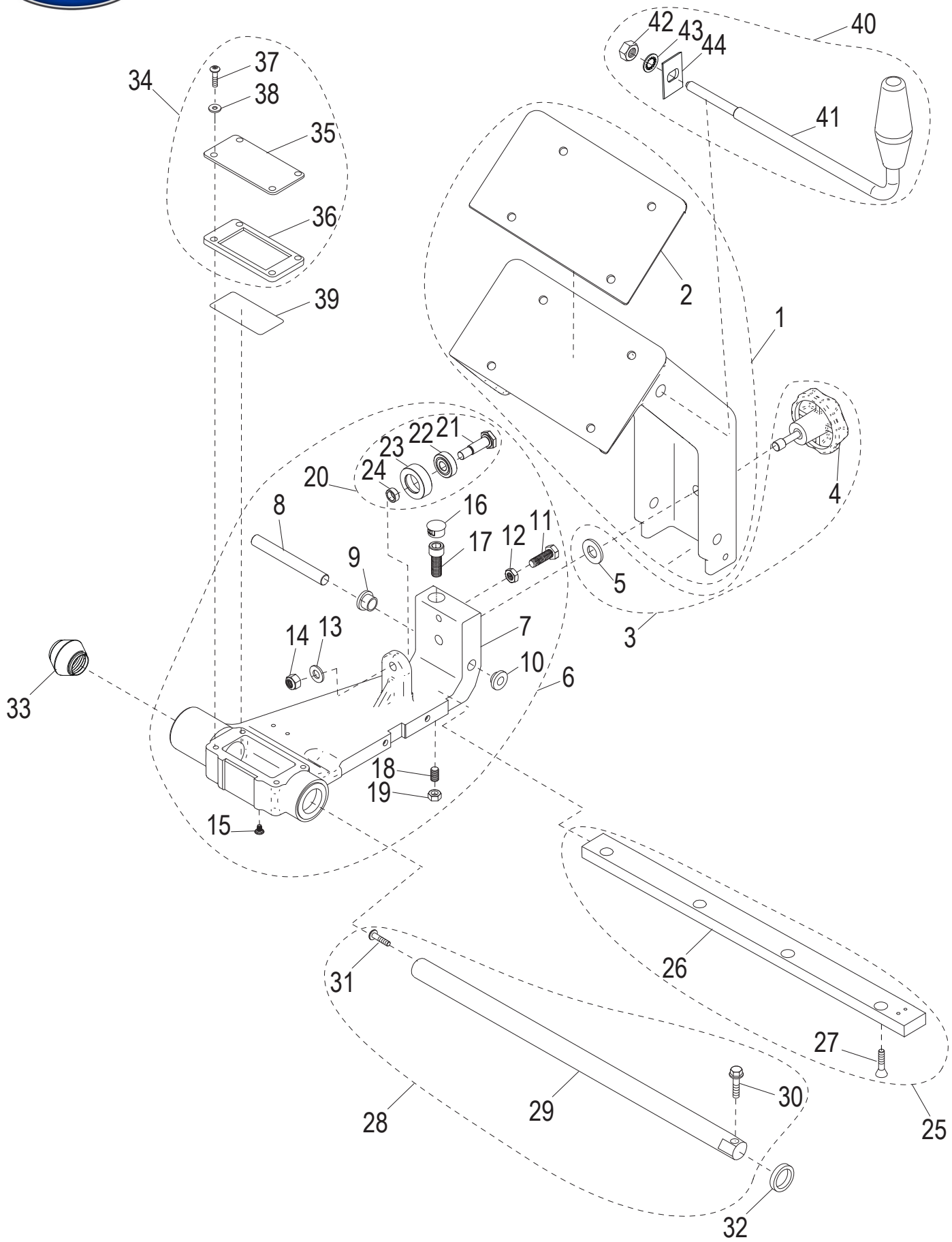

© Globe Food Equipment Company

S13 Transport Arm Assembly Components

Item	Part Number	Description		Qty	Serial Number
1	400129	Carriage Arm & Gasket Kit	(Incl. item 2)	1	
2	500004	Carriage Arm Gasket		1	
3	500052	Carriage Knob & Captive Clip Kit	(Incl. items 4-5)	1	
4		Carriage Arm Tie Down Knob		1	
5	800180	Washer, Nylon		1	
6	400115	Transport Replacement Assembly	(Incl. items 7-24)	1	
7		Transport with Bushings		1	
8	400017	Transport Attachment Pin		1	
9		Shoulder Washer .51 IDx.88 Nylon		1	
10		Shoulder Washer .51 IDx1.125 Nylon		1	
11	810406	Hex Cap Screw 5/16-24x1,18-8 (SST)		1	
12		Shoulder Washer .51 IDx1.125 Nylon		1	
13	810272	Flat Washer 5/16 Screw Size (SST)		1	
14	810420	Nyloc Nut 5/16-18, Grade 5		1	
15		Mach. Sealing Screw 8-32x1/4 PH Phillips		1	
16		Dome Plug for 5/8 Hole		1	
17		Socket Hd Cap Screw 3/8-16 x 1 (SST)		1	
18	800015	Transport Tie Down Screw		1	
19	800048	Nut 5/16-24 Hex UNF Thread (Zinc Plated Steel)		1	
20	800014	Roller Bearing Assembly	(Incl. items 21-24)	1	
21		Roller Bearing Bolt		1	
22		Roller Bearing		1	
23		Bearing Sleeve		1	
24		Spacer Sleeve		1	
25	400131	Transport Roller Bar Kit	(Incl. items 26-27)	1	
26		Transport Roller Bar		1	
27	810004	Tapping Screw 1/4-20x1 Cross Rec. FH		4	
28	400132	Transport Shaft Kit	(Incl. items 29-31)	1	
29		Transport Shaft		1	
30	800059	Washer 5/16-18x1.25 Hex Hd Tapping Screw		1	
31	800071	Mach. Screw 5/16-18x1 Truss Hd Slotted		1	
32	500005	Transport Bumper		1	
33	800131	Sleeved Spring Assembly		1	
34	300064	Transport Cover Kit	(Incl. items 35-38)	1	
35	300080	Transport Cover		1	
36	510058	Oil Well Gasket		1	
37	800109	Screw 1/4-20x.50 Button Hd Cap		1	
38		Washer 1/4 Flat		1	
39	800053	Felt Insert		1	
40	400114	Carriage Arm Handle Assembly with Nut	(Incl. items 41-44)	1	
41		Carriage Arm Handle		1	
42	810224	Hex Nut, 1/2-13 Left Hand, Thread		1	
43	810226	Lock Washer, 1/2 Screw Size, Internal Tooth		1	
44	400155	Anti Rotation Block		1	

© Globe Food Equipment Company

S13 Lift Lever Base Components

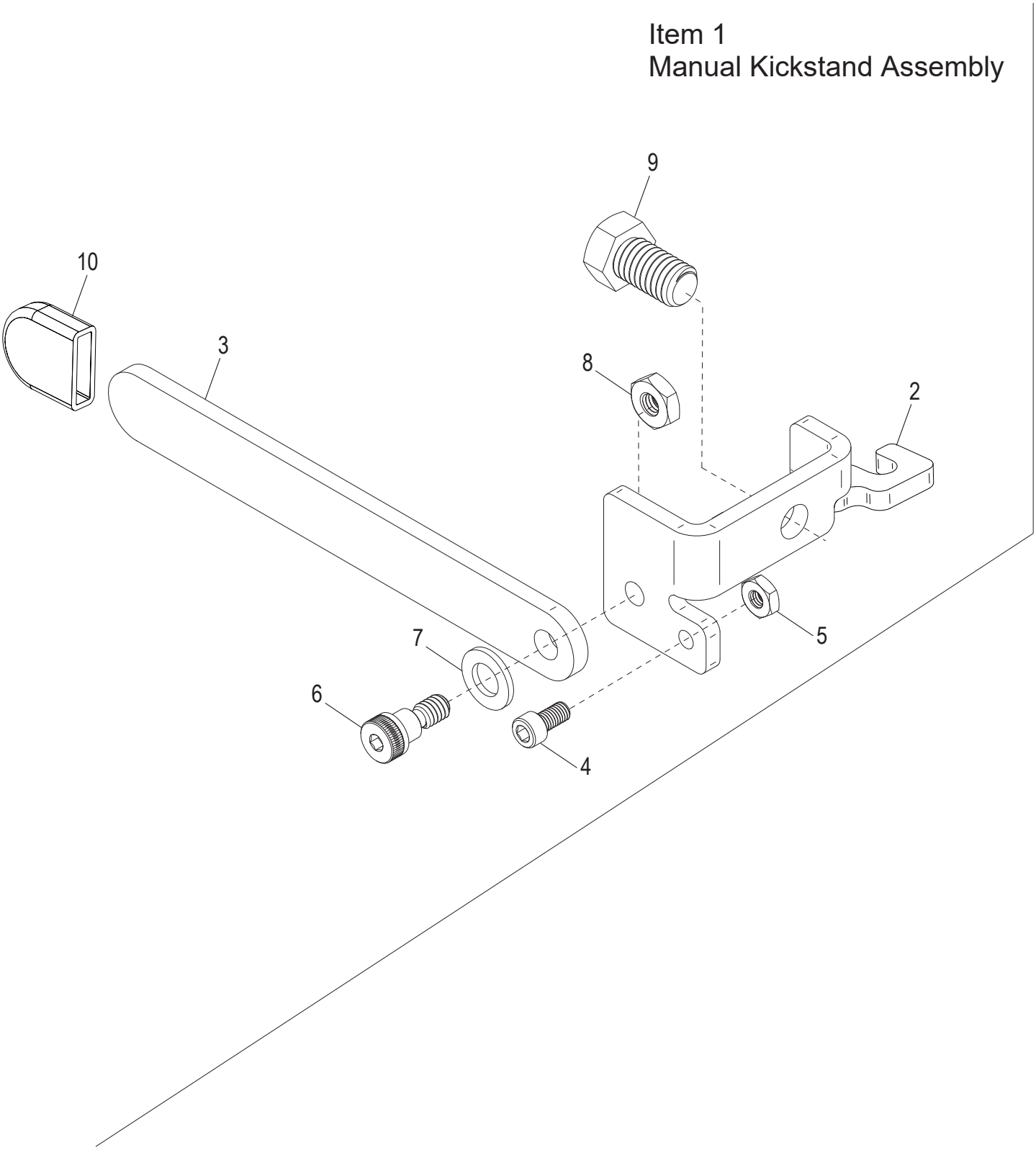

© Globe Food Equipment Company

S13 Lift Lever Base Components

Item	Part Number	Description	Qty	Serial Number
1	300046	Manual Kickstand Assembly (Incl. items 2-10)	1	
2		Manaul Kickstand Bracket	1	
3		Manual Kickstand Arm	1	
4		Socket Hd. Cap Screw #10-32 x 3/8 SST	1	
5		Hex Nut #10-32 SST	1	
6		Long Shoulder 5/16" Dia. x 1/4" Screw 1/4"-20 Thrd	1	
7	810272	Flat Washer 5/16 Screw Size (SST)	1	
8		Nylon-Insert Thin Hex Nut 1/4-20 SST	1	
9		Cap Screw, Hx Hd 5/16-18 UNC x 3/4	1	
10		Manual Kickstand Boot	1	

© Globe Food Equipment Company

S13 Carriage and End Weight Assembly Components

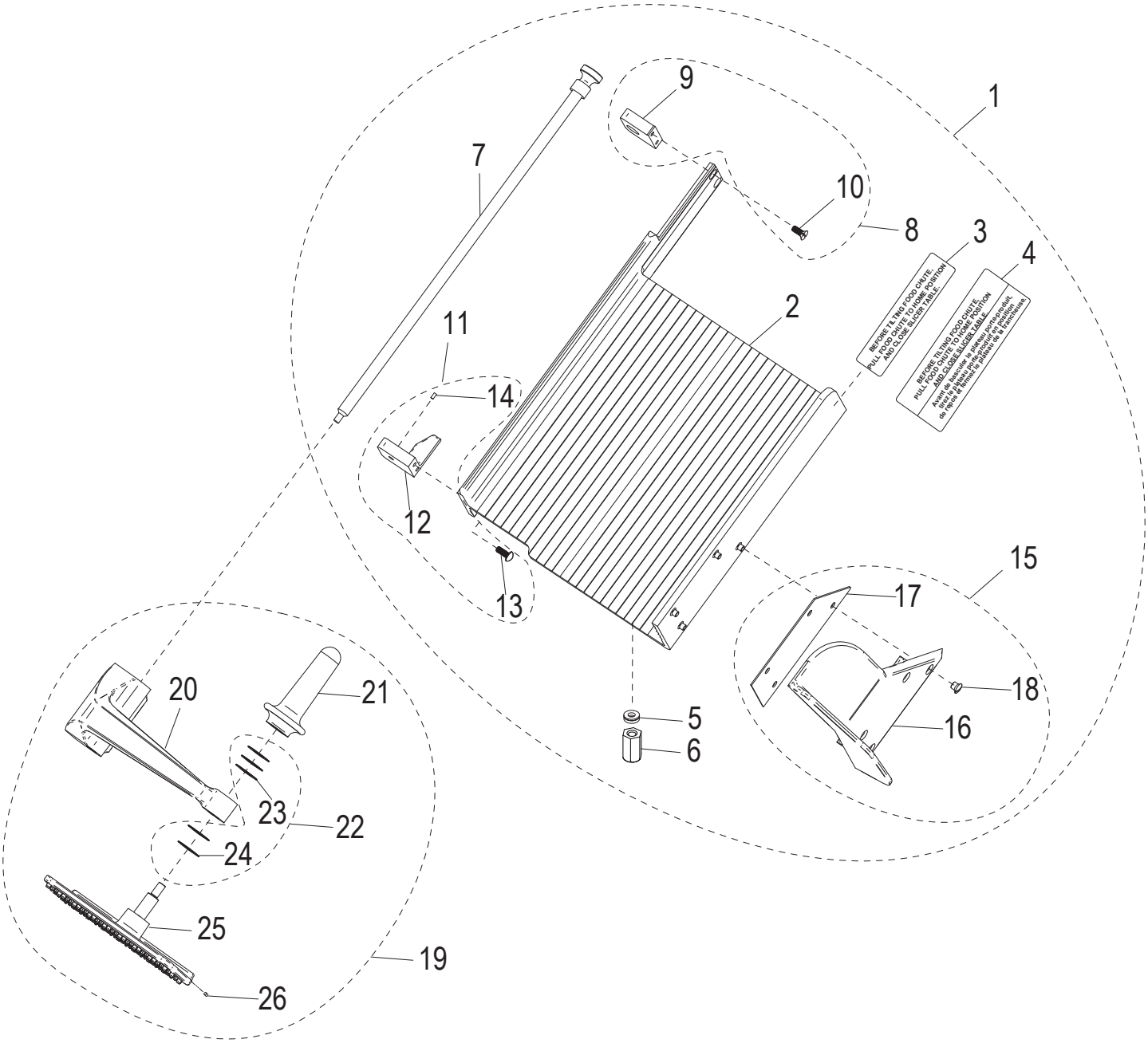

© Globe Food Equipment Company

S13 Carriage and End Weight Assembly Components

Item	Part Number	Description		Qty	Serial Number
1	400138	Carriage Assembly Kit	(Incl. items 2-18)	1	
2	400012	Carriage Insert Assembly		1	
3	920196	Carriage Tilt Label		1	
4	920197	Carriage Tilt Label (French)		1	
5	800085	Washer 1/4" Screw, Self Aligning		4	
6	800188	Custom Nut, 1/4-20		4	
7	450158	End Weight Shaft Assembly		1	
8	400135	Rod Mount Kit End Weight	(Incl. items 9-10)	1	
9		End Weight Rod Mount		1	
10	800037	Mach. Screw 1/4-20 x 5/8 FH Slotted		2	
11	400136	End Weight Stop Kit	(Incl. items 12-14)	1	
12		End Weight Stop		1	
13	800038	Mach. Screw 1/4-20 x 5/8 RH Slotted		2	
14	800205	Stop Pin, Delrin End Weight		1	
15	500046	Thumb Guard Assembly	(Incl. items 16-18)	1	
16		Carriage Thumb Guard		1	
17	510038	Carriage Thumb Guard Gasket		1	
18	810366	Thumb Guard Screw		4	
19	500027	End Weight Assembly	(Incl. items 20-26)	1	
20	420065	End Weight Arm Assembly		1	
21	500024	End Weight Handle		1	
22	800164	End Weight Face Washer Kit	(Incl. items 23-24)	1	
23		Washer .04 mm thick End Weight Face		1	
24		Washer .01 mm thick End Weight Face		4	
25	500007	Molded End Weight Assembly		1	
26	800047	Delrin 1/8 Dia x 3/8 Pin		1	

© Globe Food Equipment Company

S13 Knife and Knife Cover Components

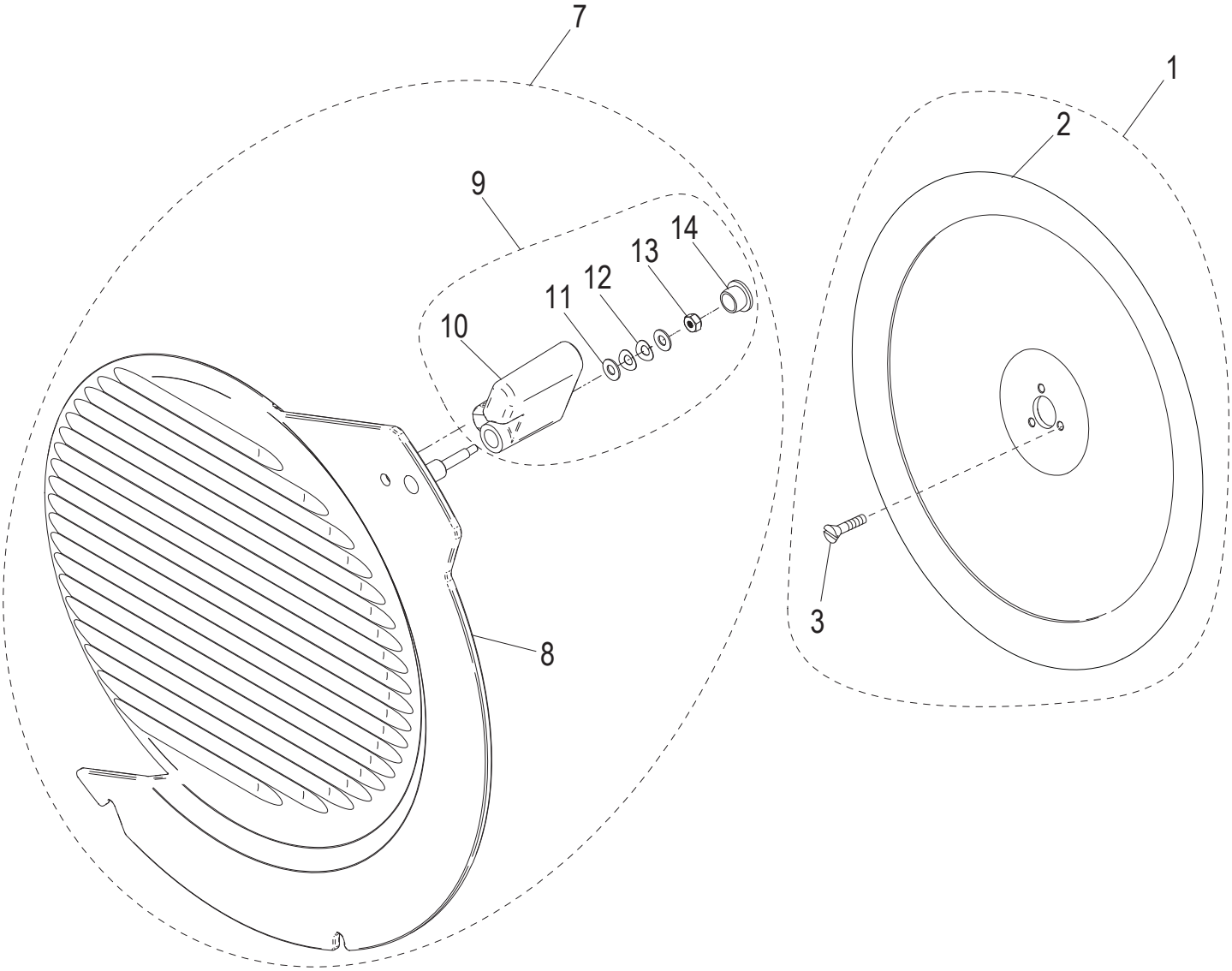

Items 4-6 Not Shown

© Globe Food Equipment Company

S13 Knife and Knife Cover Components

Item	Part Number	Description		Qty	Serial Number
1	400139	Knife Kit	(Incl. items 2-3)	1	
2		Knife, 13 Inch Steel		1	
3	810274	Mach. Screw, Flat Hd Slotted 10-32x1/2 (SST)		1	
4	400161	Stainless Steel Knife Kit	(Incl. items 5-6) Not Shown	1	
5		Knife, 13 inch (SST)	Not Shown	1	
6	810274	Mach. Screw, Flat Hd Slotted 10-32x1/2 (SST)	Not Shown	3	
7	250247	Knife Cover Assembly	(Incl. items 8-14)	1	
8	460090	Knife Cover Sub-Assembly		1	
9	500045	Knife Cover Swivel Lock Assembly	(Incl. items 10-14)	1	
10		Knife Cover Swivel Lock		1	
11		Flat Washer #10 Thin Profile		2	
12		Curved Disk Spring		2	
13		Nut, 6-32 INC-2B Hex, with Nylon Insert		1	
14	520237	Barrel Plug, Push-In		1	

© Globe Food Equipment Company

S13 Sharpener Assembly Components

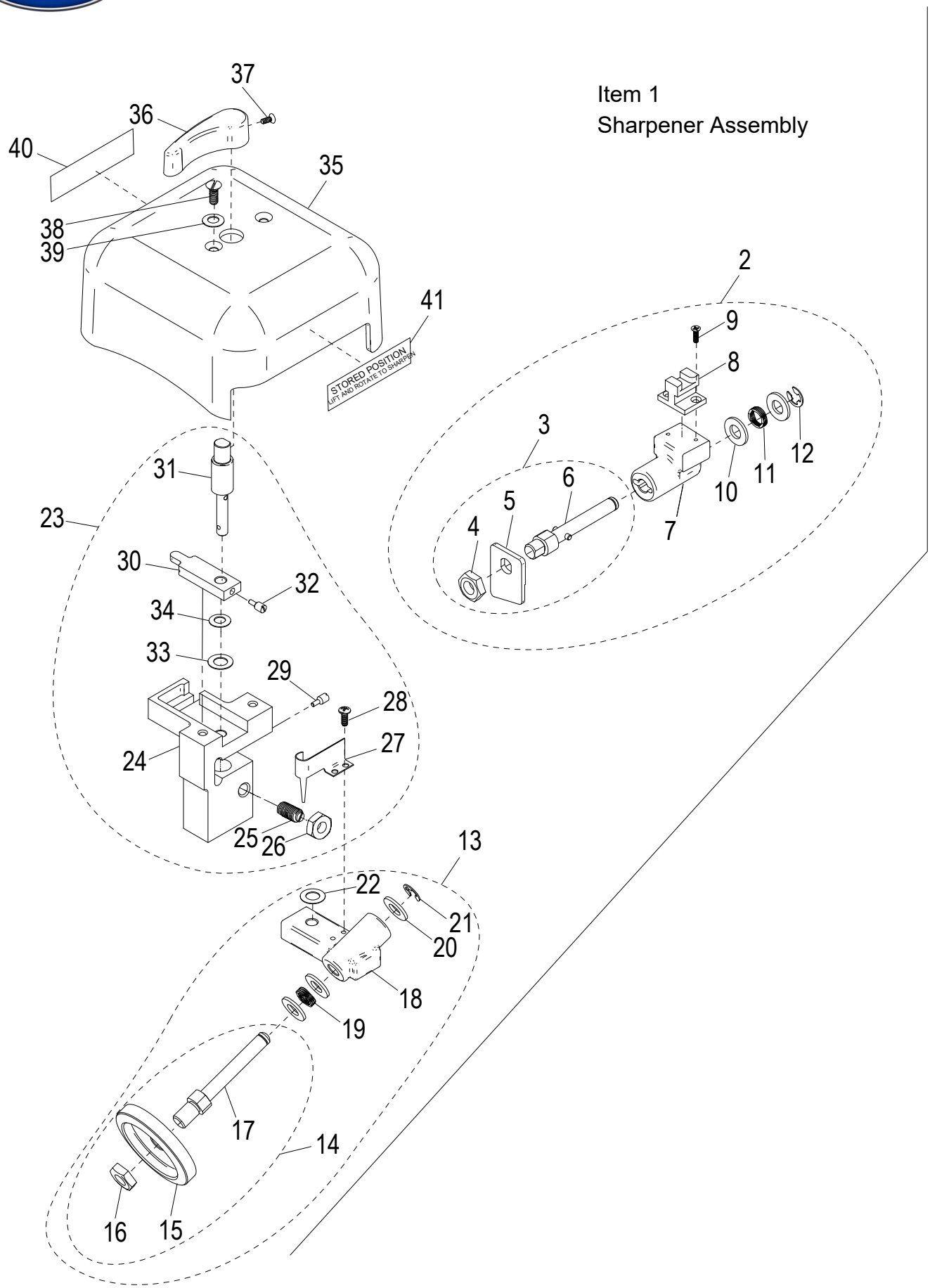

© Globe Food Equipment Company

S13 Sharpener Assembly Components

Item	Part Number	Description		Qty	Serial Number
1	440044	Sharpener Assembly	(Incl. items 2-41)	1	
2	430051	Honing Stone Assembly	(Incl. items 3-12)	1	
3		Honing Stone Shaft Assembly	(Incl. items 4-6)	1	
4	890390	Jam Nut 3/8-24 Sharpener Wheel		1	
5	240045	Honing Stone		1	
6		Honing Stone Shaft Assembly		1	
7		Honing Stone Bracket		1	
8		Honing Stone Slide		1	
9		Mach. Screw 4-40x3/8 FH Phillips		2	
10	810272	Flat Washer 5/16 Screw Size (SST)		2	
11		Wave Spring, Honing Stone		1	
12		Retaining Ring, Type E, for 5/16 Shaft		1	
13	430052	Sharpening Stone Assembly	(Incl. items 14-22)	1	
14		Sharpening Stone Shaft Assembly	(Incl. items 15-17)	1	
15	410048	CBN Sharpening Stone		1	
16		Hex Nut 3/8-24 UNF-2B		1	
17		Shapening Stone Shaft		1	
18		Sharpening Stone Bracket		1	
19		Wave Spring, Sharpening Stone		1	
20	810272	Flat Washer 5/16 Screw Size (SST)		3	
21		Retaining Ring, Type E, for 5/16 Shaft		1	
22	810437	Flat Washer		1	
23	400137	Sharpener Mount Center Kit	(Incl. items 24-35)	1	
24		Sharpener Center Mount		1	
25		Slotted Ball Plunger, 1/4-28 SST		1	
26		Thin Hex Nut, 1/4-28		1	
27		Sharpener Return Spring		1	
28		Mach. Screw 6-32x3/8 Pan Hd Cross-Rec.		2	
29		Slotted Set Screw 10-32 Sharpener Actuator		1	
30		Honing Stone Lever		1	
31		Sharpener Handle Shaft		1	
32		Slotted Set Screw 10-32 Sharpener Actuator		1	
33	810437	Flat Washer		1	
34	800184	Curved Disk Spring, 1/4" Rod Size		1	
35	250069	Sharpener Cover		1	
36	510041	Sharpener Handle, Top	Refer to Serial Number Document	1	
36	500070	Sharpener Handle, Top	Refer to Serial Number Document	1	
37	810233	Mach. Screw 8-32x1/2 Black, Phillips, w/Nylon Patch	Refer to Serial Number Document	1	
37	800223	Mach. Screw 8-32 x 3/8 Black, FH Phillips	Refer to Serial Number Document	1	
38	810246	Mach. Screw, Truss Hd Slotted 10-32x1/2 (SST)		2	
39		Curved Disk Spring		2	
40	920215	Label, Sharpen Position		1	
41	920216	Label, Stored Position		1	

© Globe Food Equipment Company

S13 Removable Carriage Components - Option

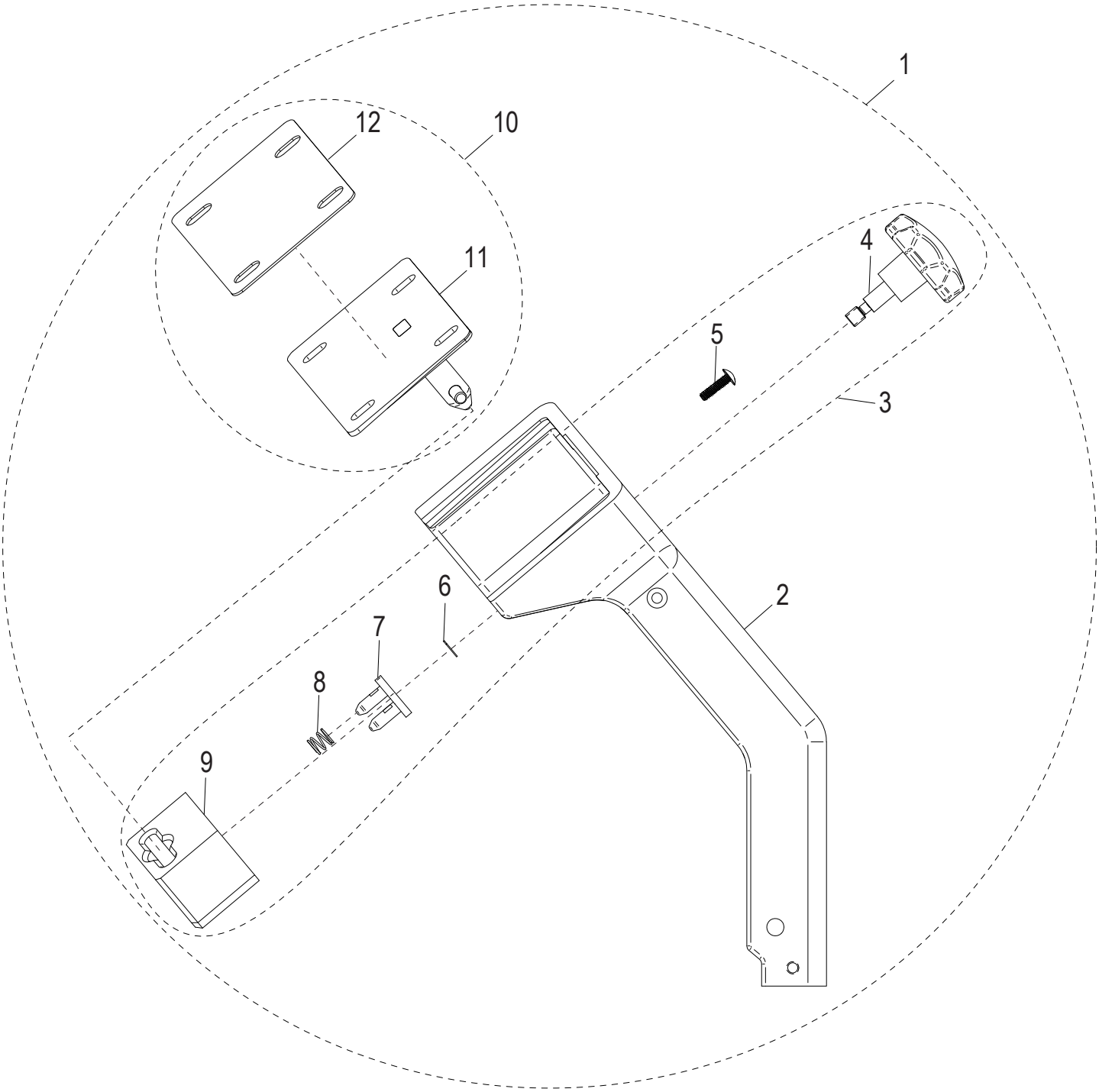

© Globe Food Equipment Company

S13 Removable Carriage Components - Option

Item	Part Number	Description	Qty	Serial Number
1	450221	Removable Carriage Arm Assembly Kit	1	
2	450217	Carriage Arm for Removable Carriage	1	
3	450220	Removable Carriage Machanism Assembly Kit	1	
4	500056	Removable Carriage Knob Assembly	1	
5	810358	Mach. Screw 1/4-20x1 Truss Hd Slotted	2	
6		E-Clip Retaining Ring for 1/4" Shaft	1	
7		Lock Out Assembly	1	
8		Compression Spring	2	
9	420103	Guide Block	1	
10	450219	Removable Carriage Attachment Assembly Kit	1	
11		Carriage Attachment Assembly	1	
12	500057	Removable Carriage Gasket	1	

© Globe Food Equipment Company

S13 Knife Removal Tool - Option

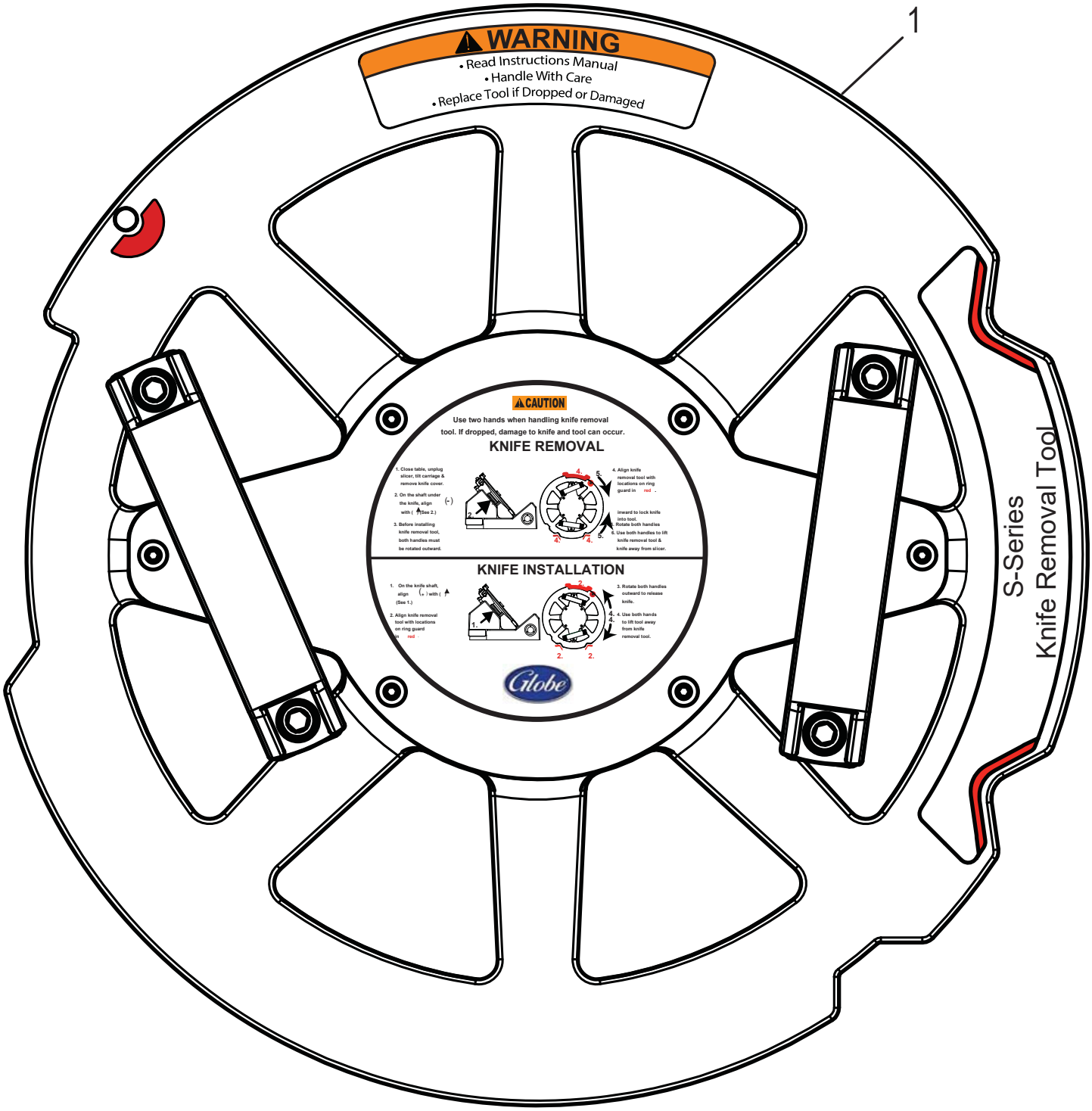

© Globe Food Equipment Company

S13 Knife Removal Tool - Option

Item	Part Number	Description	Qty	Serial Number
1	450200	Removable Knife Tool Assembly	1	

© Globe Food Equipment Company

S13 Removable Knife Kit - Option

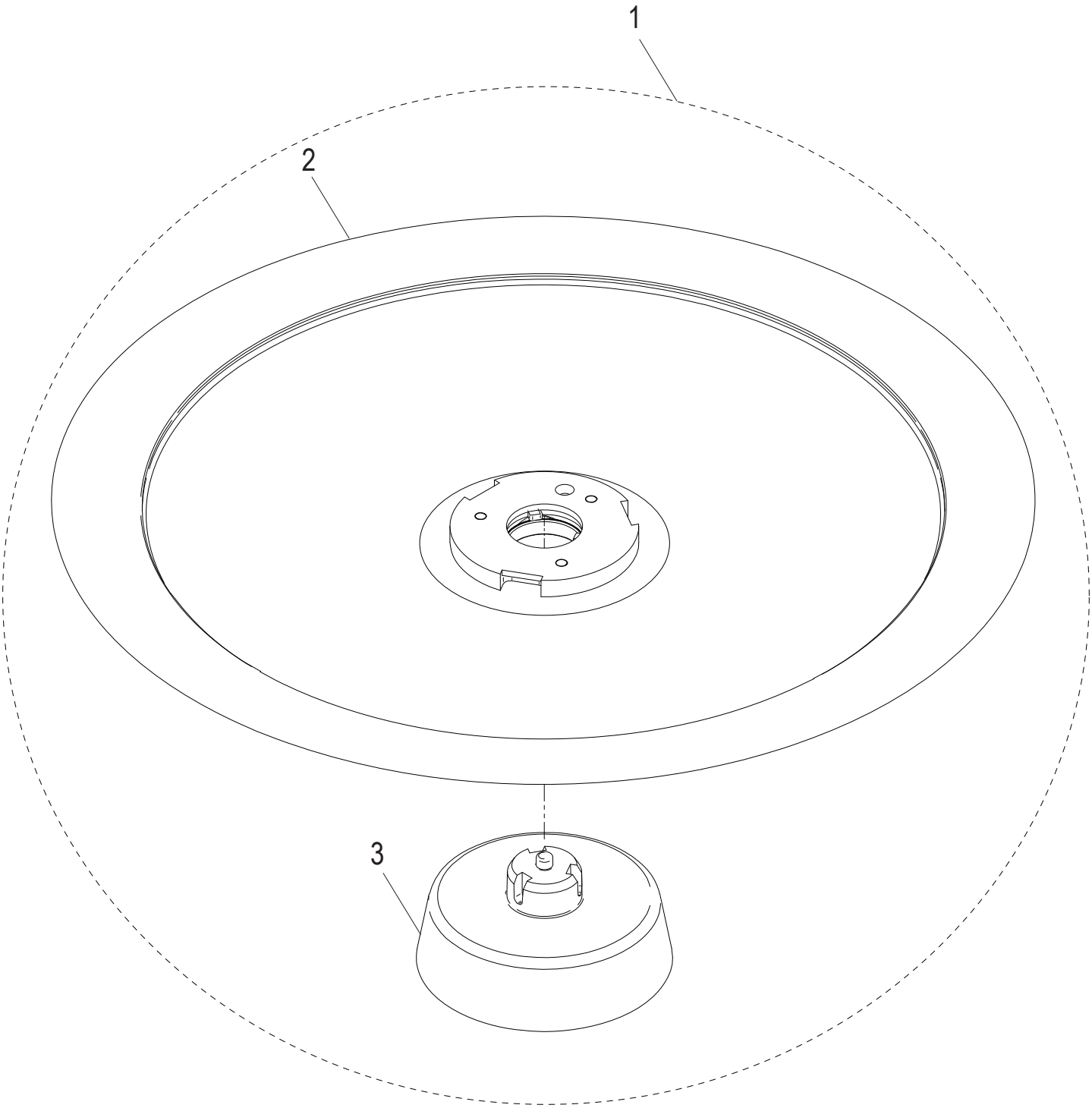

© Globe Food Equipment Company

S13 Removable Knife Kit - Option

Item	Part Number	Description	Qty	Serial Number
1	450222-01	Removable Knife Kit	1	
2		Knife, 13" Removable	1	
3		Post, Service Knife Release	1	
4	450222-03	Removable Knife Kit, SST (Not Shown)	1	
5		Knife, 13" SST Removable (Not Shown)	1	
6		Post, Service Knife Release (Not Shown)	1	

© Globe Food Equipment Company

S13 Removable Knife Drive Kit - Option

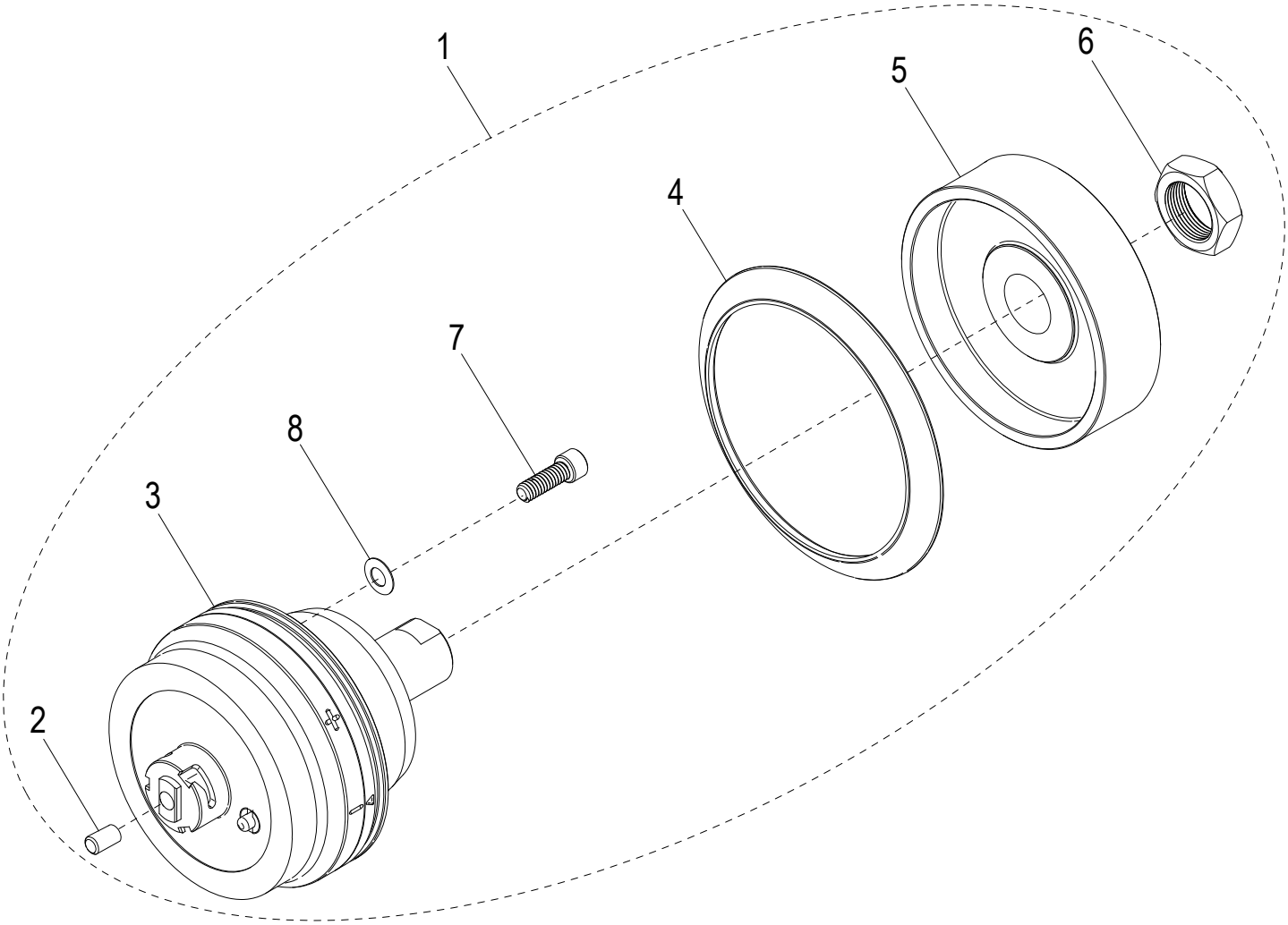

© Globe Food Equipment Company

S13 Removable Knife Drive Kit - Option

Item	Part Number	Description	Qty	Serial Number
1	450226-01	Removable Knife Drive Kit	1	
2	1193	Plug	1	
3		Shaft, Removable Knife Drive	1	
4	520244	Knife Drive Boot	1	
5	450115	Knife Drive Pulley	1	
6	510033	Nut 7/8-20 Hex (Zinc)	1	
7	810229	Socket Hd. 1/4-20x3/4 Cap Screw, SST	4	
8	810275	Bellville Disc Spring Washer .255 ID x .50 OD	4	

© Globe Food Equipment Company

S13 Wiring Schematic

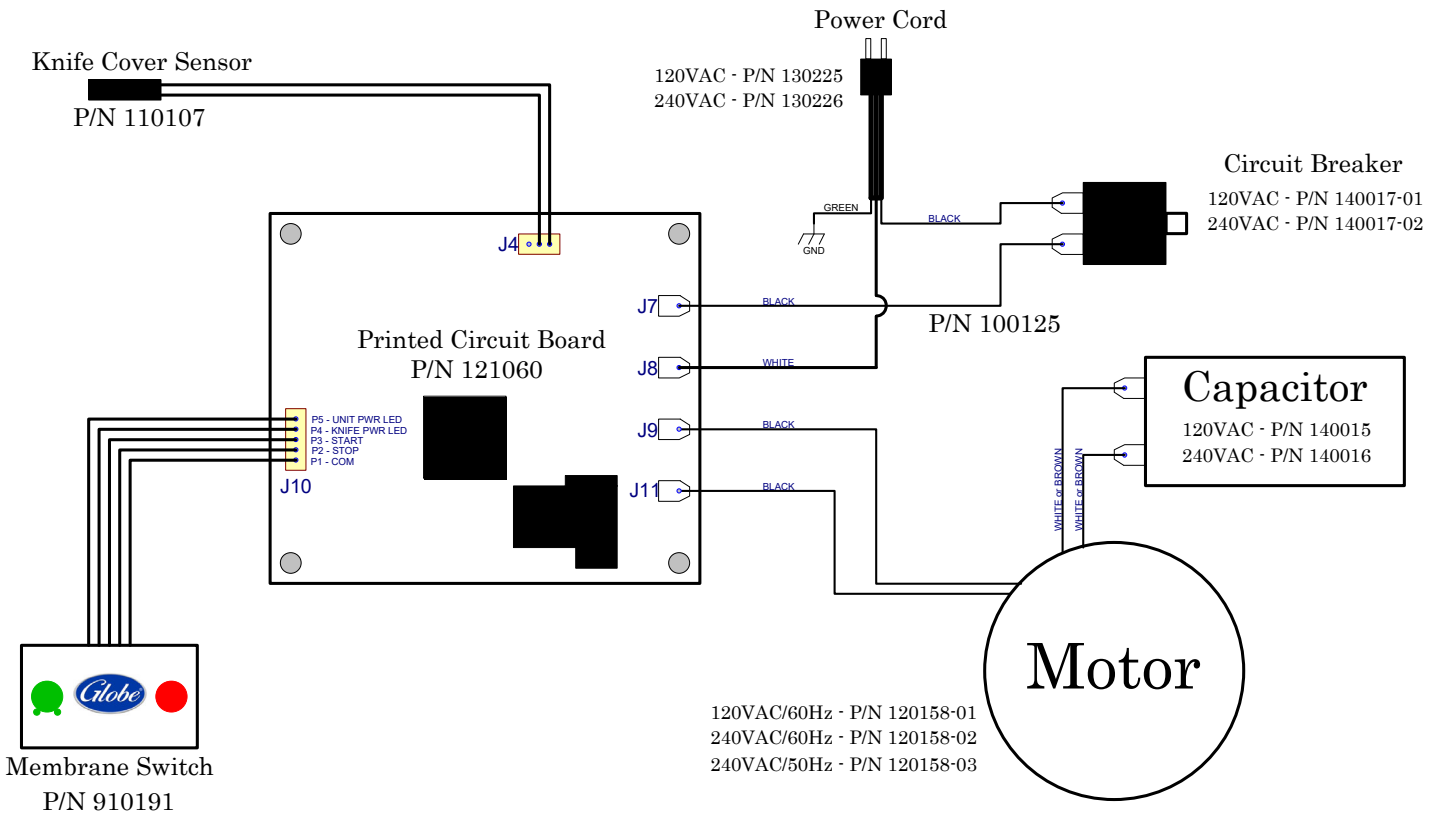

© Globe Food Equipment Company