HOBART

CATALOG OF REPLACEMENT PARTS

FOOD PROCESSOR

HCM61	**ML-134017**
HCM62	**ML-134018**

A product of HOBART CORPORATION 701 S. RIDGE AVENUE TROY, OHIO 45374-0001

FORM 34489 (June 2000)

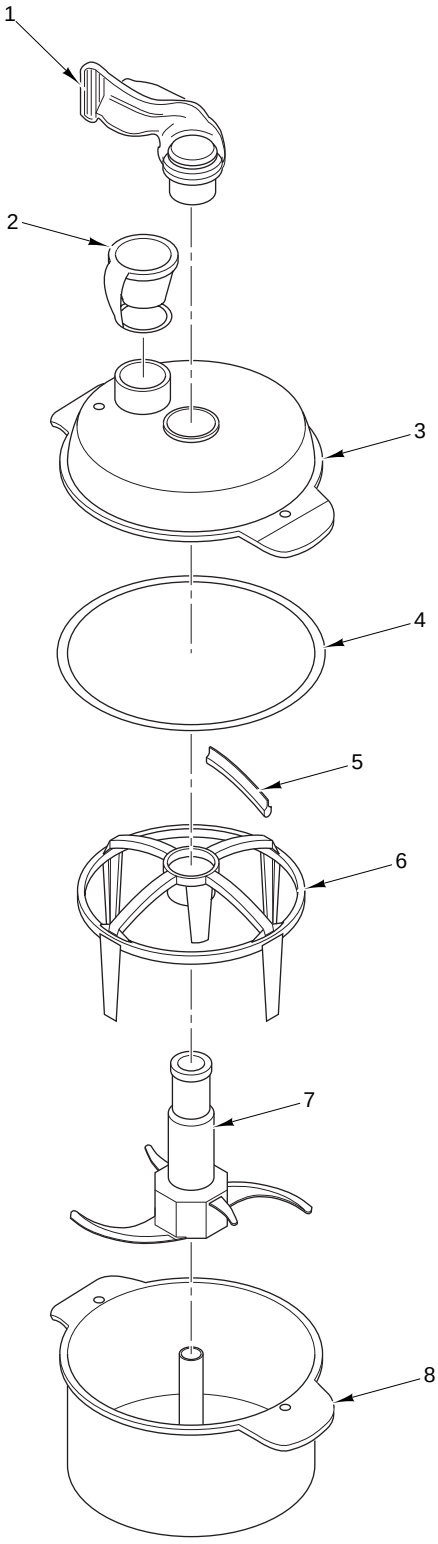

BOWL & KNIFE UNIT

BOWL & KNIFE UNIT

ILLUS. PL-55142	PART NO.	NAME OF PART	AMT.
1	00-875011	Handle - Scraper	1
2	00-875002	Plug	1
3	00-875001	Lid	1
4	00-875000	Seal - Lid	1
5	00-873992	Blade - Scraper	4
6	00-873991	Scraper	1
7	00-875008	Head - Knife	1
8	00-875003	Bowl	1

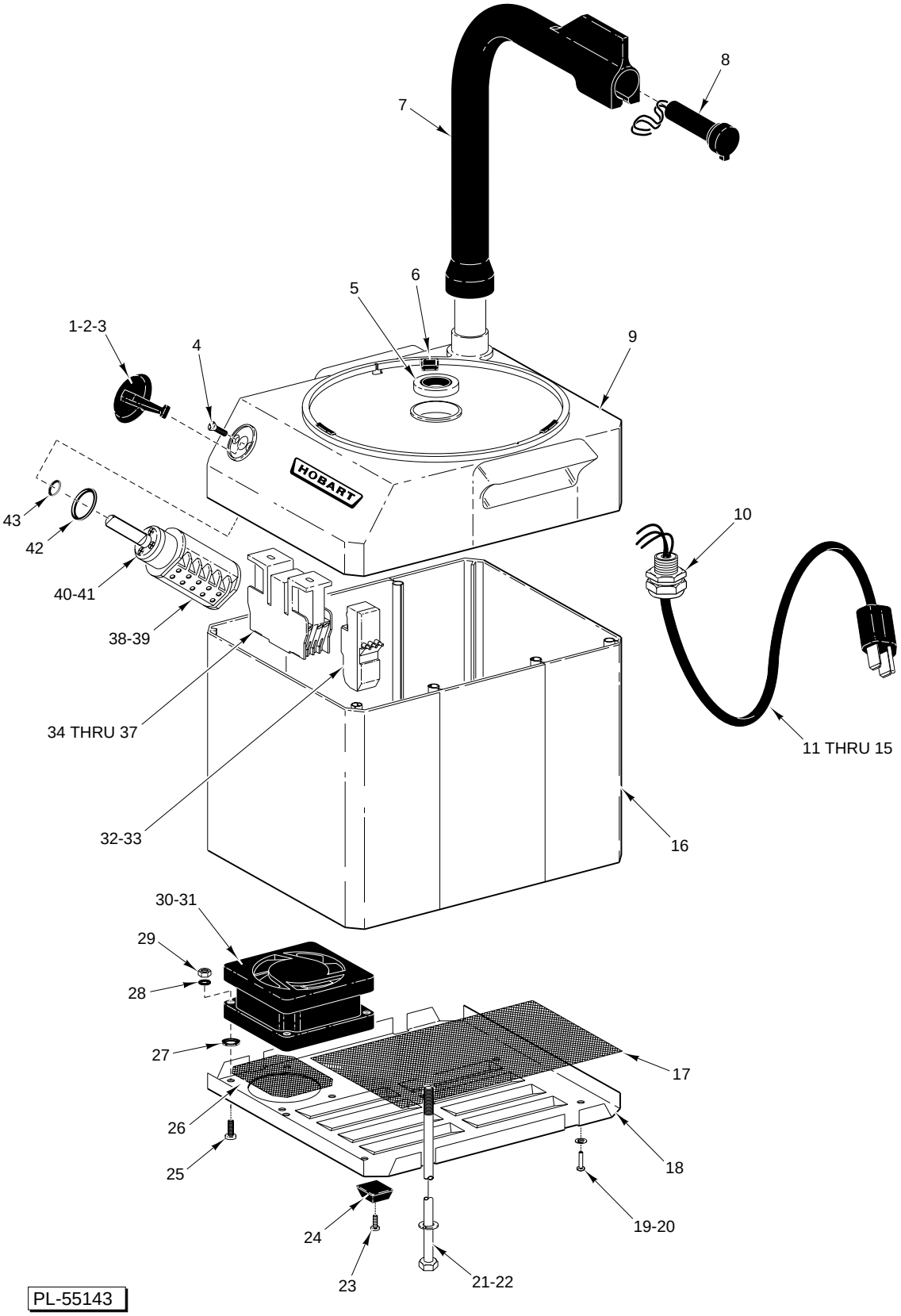
8
7
6
5
1-2-3
4
9
HOBART
43
42
40-41
38-39
10
34 THRU 37
11 THRU 15
32-33
16
30-31
29
28
27
17
26
25
18
24
19-20
23
21-22
PL-55143

HOUSING

HOUSING

ILLUS. PL-55143	PART NO.	NAME OF PART	AMT.
1	00-437956	Knob - Indicator (HCM61)	1
2	00-437957	Knob - Indicator (HCM62)	1
3	00-437924	Washer - Seal V-10	1
4	SC-121-54	Mach. Screw M4 x 16mm Flat Hd.	2
5	00-437973	Seal - Washer	1
6	00-437935	Buffer	3
7	00-437958	Arm	1
8	00-437950	Switch Magnet	1
9	00-875010	Cover - Top	1
10	FE-025-09	Strain Relief	1
11	00-438358	Cord - Power Supply (3 Wire) (HCM61)	1
12	00-438359	Cord - Power Supply (4 Wire) (HCM62)	1
13	00-437986	Plug (125 V.) (HCM61)	1
14	00-437985	Plug (240 V.) (HCM62)	1
15	00-274344	Circuit - RC 110 V. (HCM61)	1
16	00-437959	Housing	1
17	00-438363	Screen - Louver	1
18	00-438361	Plate - Cover	1
19	00-438369	Lockwasher	AR
20	RS-014-04	Rivet ⅛ x 5/16 Button Hd.	AR
21	WL-019-75	Lockwasher 5.1MM Medium	8
22	SC-122-42	Cap Screw M5 x 0.8 x 197mm Hex Hd. SST	4
23	SC-118-28	Mach. Screw M4 x 12 mm Pan Hd.	4
24	00-439739	Foot - Rubber	4
25	SC-121-59	Mach. Screw M5 x 0.8 x 10mm Truss Hd.	4
26	00-438362	Screen - Fan	1
27	00-875016	Washer	4
28	WL-200-03	Lockwasher M4 SST	4
29	NS-200-03	Nut M4 x 0.7 Hex SST	4
30	00-438365	Fan - 120 V. (HCM61)	1
31	00-438366	Fan - 230 V. (HCM62)	1
32	00-437984	Protector - Overload LR2-01321 (HCM61)	1
33	00-437983	Protector - Overload LR2-D1310 (HCM62)	1
34	00-087713-00092	Contactor (LCI-D2510 F7) (HCM61)	1
35	00-437980	Contactor 240 V. LCI-D09 (HCM62)	1
36	SC-121-22	Mach. Screw M4 x 0.7 x 16mm Cheese Hd. (HCM62)	2
37	00-438364	Bracket - Rail (HCM61)	1
38	00-437977	Switch - Selector (CH20) (HCM61)	1
39	00-437978	Switch - Selector (CA-10) (HCM62)	1
40	SC-122-37	Mach. Screw M4 x 0.7 x 10mm Phil. Pan Hd. SST	4
41	00-437976	Spacer	1
42	00-437982	Ring - Seal	1
43	00-437981	Washer - Seal	1
	00-437955	Harness - Wire (HCM61)	1
	00-437972	Harness - Wire (HCM62)	1

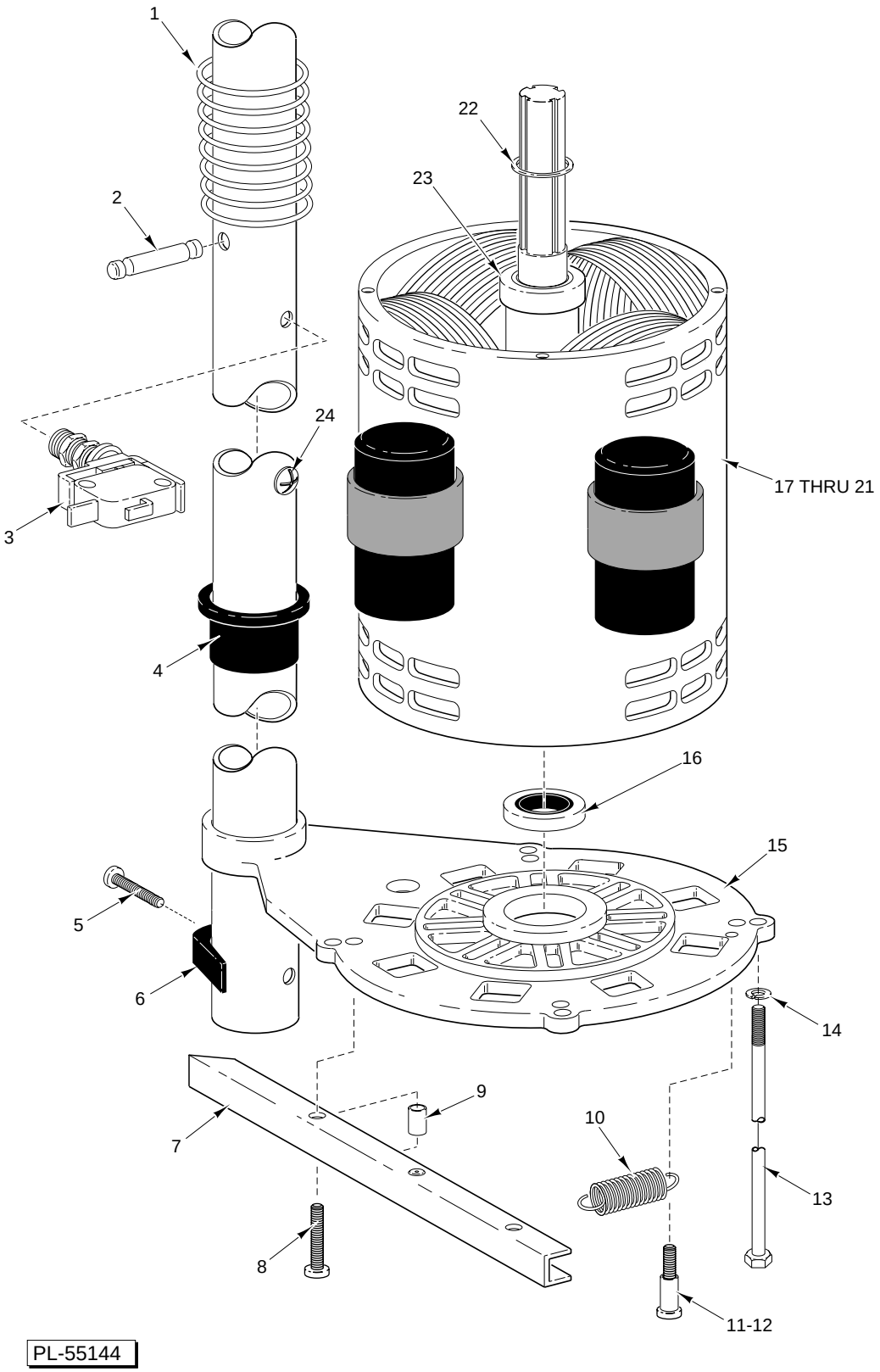

MOTOR UNIT

MOTOR UNIT

ILLUS. PL-55144	PART NO.	NAME OF PART	AMT.
1	00-875005	Spring - Pressure	1
2	00-875009	Pin	1
3	00-437928	Switch - Micro BVMF	1
4	00-875022	Bushing	1
5	SD-037-93	Self-Tapping Screw 6-20 x 13/16 Phil. Pan Hd., Type B	1
6	00-437937	Knob Cam	1
7	00-437966	Device - Brake	1
8	SC-122-38	Mach. Screw 4M x 0.7 x 25mm Pan Hd. SST	1
9	00-437946	Sleeve	1
10	00-875006	Spring - Draw	1
11	00-437946	Sleeve	1
12	SC-122-38	Mach. Screw 4M x 0.7 x 25mm Pan Hd. SST	1
13	SC-122-40	Cap Screw M5 x 0.8 x 188mm Hex Hd., Min. Thrd. 16m	4
14	WL-019-75	Lockwasher 5.1MM Medium	4
15	00-875021	Bearing Bracket	1
16	BB-005-23	Ball Bearing	1
17	00-875023	Motor Assy. (HCM61)	1
18	00-873990	Motor Assy. (HCM62)	1
19	00-438767	Switch - Electronic Start (HCM61)	1
20	00-875030	Capacitor - Start (HCM61)	1
21	00-875031	Capacitor - Run (HCM61)	1
22	00-437922	Washer - Cupped	1
23	BB-015-08	Ball Bearing	1
24	SD-032-23	Self-Tapping Screw 8-18 x 3/8 Phil. Pan Hd., Type B	1