HOSHIZAKI

Parts List

Commercial Series
Refrigerated Kitchen Equipment

Models
Undercounter, Worktop, Prep Table
CRM_27, CRM_36, CRM_48, CRM_60, CRM_72

hoshizakiamerica.com

Number: 71335
Issued: 4-23-2018
Revised: 5-31-2019

CONTENTS

Auxiliary Codes 3
Model Codes 13
A. Main Assembly 14
CRMR27 and CRMF27 Undercounter, Worktop, and Prep Table 14
CRMR36 Undercounter, Worktop, and Prep Table 18
CRMR48 and CRMF48 Undercounter, Worktop, and Prep Table 21
CRMR60 and CRMF60 Undercounter, Worktop, and Prep Table 27
CRMR72 Undercounter, Worktop, and Prep Table 33
B. Refrigeration Circuit 39
CRMR27 Undercounter, Worktop, and Prep Table 39
CRMF27 Undercounter and Worktop 41
CRMR36 Undercounter, Worktop, and Prep Table 43
CRMR48 Undercounter, Worktop, and Prep Table 45
CRMF48 Undercounter and Worktop 47
CRMR60 Undercounter, Worktop, and Prep Table 49
CRMF60 Undercounter and Worktop 51
CRMR72 Undercounter, Worktop, Prep Table 53
C. Door-Right Hinged 55
D. Door-Left Hinged 58
E. Door-Right Glass Door Hinged 60
F. Door-Left Glass Door Hinged 61
G. Drawer 62
H. Accessories & Labels 64

Auxiliary Codes

CRMR27

A-5 July 2011
B-5 January 2012
C-5 January 2013
C-6 June 2013
C-7 September 2013
C-8 December 2013
D-5 January 2014
D-6 June 2014
D-7 July 2014
E-5 January 2015
E-6 November 2015
F-5 January 2016
F-6 November 2016
G-5 January 2017
H-5 January 2018

CRMR27-GLP01

G-5 July 2017
H-5 April 2018

CRMR27-01

C-7 September 2013
D-5 April 2014
D-7 September 2014
E-5 February 2015
E-6 November 2015
F-5 June 2016
F-6 November 2016
G-5 January 2017
H-5 February 2018

CRMR27-LP

D-5 January 2014
D-6 June 2014
D-7 October 2014
E-5 June 2015
E-6 November 2015
F-5 January 2016
F-6 November 2016
G-5 January 2017
H-5 January 2018

CRMR27-LPC

E-5 September 2015
F-5 January 2016
F-6 November 2016
G-5 January 2017
H-5 January 2018

CRMR27-D

C-5 December 2013
D-5 February 2014
D-6 August 2014
E-5 January 2015
E-6 June 2015
F-5 January 2016
F-6 November 2016
G-5 January 2017
H-5 January 2018

CRMR27-W

A-5 December 2011
B-5 January 2012
C-5 January 2013
D-5 May 2014
D-6 June 2014
E-5 March 2015
E-6 December 2015
F-5 January 2016
F-6 November 2016
G-5 January 2017
H-5 January 2018

CRMR27-W01

B-5 August 2012
E-5 February 2015
E-6 November 2015
F-6 November 2016

CRMR27-WD

D-5 February 2014
D-6 July 2014
E-5 February 2015
E-6 September 2015
F-5 March 2016
F-6 November 2016
G-5 February 2017
H-5 January 2018

CRMR27-8

B-5 March 2012
C-5 January 2013
C-6 June 2013
C-7 December 2013
D-5 January 2014
D-6 June 2014
D-7 July 2014
D-8 September 2014
E-5 January 2015
E-6 April 2015
E-7 June 2015
E-8 November 2015
F-5 January 2016
F-6 April 2016
F-7 August 2016
F-8 October 2016
G-5 January 2017
G-6 June 2017
H-5 January 2018

CRMR27-8D

D-5 April 2014
D-6 July 2014
D-8 September 2014
E-6 April 2015
E-7 October 2015
E-8 December 2015
F-5 February 2016
F-6 May 2016
F-7 September 2016
F-8 November 2016
G-5 February 2017
G-6 August 2017
H-5 February 2018

Auxiliary Codes Continued

CRMR27-12M

B-5	February 2012
C-5	January 2013
C-6	May 2013
C-7	November 2013
D-5	February 2014
D-6	June 2014
D-7	August 2014
D-8	September 2014
E-5	January 2015
E-6	April 2015
E-7	June 2015
E-8	November 2015
F-5	January 2016
F-6	March 2016
F-7	August 2016
F-8	October 2016
G-5	January 2017
G-6	June 2017
H-5	January 2018

CRMR27-12MD

D-5	February 2014
D-8	September 2014
E-6	April 2015
E-7	June 2015
E-8	November 2015
F-5	January 2016
F-6	March 2016
F-7	August 2016
F-8	October 2016
G-6	July 2017
H-5	March 2018

CRMF27

A-5	July 2011
B-5	January 2012
C-5	January 2013
C-6	June 2013
C-7	November 2013
D-5	January 2014
D-6	May 2014
D-7	June 2014
E-5	January 2015
E-6	November 2015
F-5	February 2016
F-6	July 2016
F-7	August 2016
G-5	January 2017
H-5	January 2018
H-6	July 2018

CRMF27-GLP01

G-5	July 2017
H-5	June 2018
H-6	July 2018

CRMF27-01

C-5	October 2013
D-5	April 2014
D-7	September 2014
E-5	February 2015
E-6	November 2015
F-5	March 2016
F-6	July 2016
F-7	August 2016
G-5	February 2017
H-5	February 2018
H-6	July 2018

CRMF27-LP

D-5	January 2014
D-7	June 2014
E-5	October 2015
E-6	November 2015
F-5	February 2016
F-6	July 2016
F-7	September 2016
G-5	January 2017
H-5	January 2018
H-6	July 2018

CRMF27-W

A-5	December 2011
B-5	January 2012
C-5	January 2013
C-6	June 2013
C-7	December 2013
D-5	January 2014
D-6	May 2014
D-7	June 2014
E-5	January 2015
E-6	November 2015
F-5	January 2016
F-6	July 2016
F-7	August 2016
G-5	January 2017
H-5	January 2018
H-6	August 2018

CRMF27-D

D-5	May 2014
D-7	June 2014
E-6	October 2015
F-5	January 2016
F-6	July 2016
F-7	October 2016
G-5	January 2017
H-5	January 2018
H-6	July 2018

CRMF27-W01

E-5	April 2015
F-5	January 2016
F-6	July 2016
F-7	August 2016
G-5	May 2017

CRMF27-WD

D-5	May 2014
D-7	October 2014
E-5	January 2015
E-6	August 2015
F-5	January 2016
F-6	July 2016
F-7	October 2016
G-5	March 2017
H-5	May 2018
H-6	August 2018

Auxiliary Codes Continued

CRMR36

F-5 August 2016
G-5 January 2017
G-6 May 2017
H-5 February 2018

CRMR36-W

F-5 September 2016
G-5 February 2017
G-6 April 2017
H-5 January 2018

CRMR36-10

F-5 November 2016
G-5 February 2017
G-6 April 2017
G-7 July 2017
H-5 February 2018

CRMR36-15M

F-5 November 2016
G-5 February 2017
G-6 April 2017
G-7 July 2017
H-5 January 2018

Auxiliary Codes Continued

CRMR48

A-5	August 2011
B-5	January 2012
C-5	January 2013
C-6	June 2013
C-7	October 2013
C-8	November 2013
D-5	January 2014
D-6	October 2014
E-5	January 2015
F-5	January 2016
F-6	March 2016
F-7	September 2016
G-5	January 2017
H-5	January 2018

CRMR48-GLP01

G-5	July 2017
H-5	TBD

CRMR48-01

B-5	August 2012
D-5	April 2014
D-6	June 2014
E-5	February 2015
F-6	March 2016
F-7	September 2016
G-5	February 2017
H-5	TBD

CRMR48-D2

G-5	March 2017
H-5	TBD

CRMR48-D4

D-5	March 2014
D-6	September 2014
E-6	September 2015
F-5	January 2016
F-6	March 2016
F-7	September 2016
G-5	January 2017
H-5	January 2018

CRMR48-W

A-5	December 2011
B-5	February 2012
C-5	January 2013
C-6	June 2013
C-7	September 2013
C-8	December 2013
D-5	February 2014
D-6	June 2014
E-5	January 2015
E-6	July 2015
F-5	January 2016
F-6	March 2016
F-7	September 2016
G-5	January 2017
H-5	January 2018

CRMR48-W01

C-5	February 2013
E-5	February 2015
F-6	July 2016
F-7	October 2016
G-5	April 2017
H-5	TBD

CRMR48-WD2

G-5	June 2017
H-5	TBD

CRMR48-WD4

D-5	March 2014
D-6	September 2014
E-5	May 2015
E-6	September 2015
F-6	June 2016
F-7	October 2016
G-5	January 2017
H-5	January 2018

CRMR48-8

B-5	March 2012
C-5	February 2013
C-6	June 2013
C-7	November 2013
D-5	May 2014
D-7	August 2014
D-8	October 2014
E-6	April 2015
E-7	August 2015
E-8	November 2015
F-5	January 2016
F-6	April 2016
F-7	August 2016
F-8	October 2016
G-5	January 2017
G-6	July 2017
H-5	January 2018

CRMR48-12

B-5	March 2012
C-5	January 2013
C-6	May 2013
C-7	October 2013
D-5	January 2014
D-6	June 2014
D-7	July 2014
D-8	September 2014
E-5	January 2015
E-6	April 2015
E-7	June 2015
E-8	November 2015
F-5	January 2016
F-6	March 2016
F-7	August 2016
F-8	October 2016
G-5	January 2017
G-6	June 2017
H-5	January 2018

Auxiliary Codes Continued

CRMR48-12D2

G-5 July 2017
H-5 January 2018

CRMR48-12D4

D-5 April 2014
D-7 August 2014
D-8 October 2014
E-6 April 2015
E-7 August 2015
E-8 November 2015
F-6 May 2016
F-7 August 2016
F-8 October 2016
G-5 March 2017
G-6 September 2017
H-5 January 2018

CRMR48-12M

B-5 March 2012
C-5 February 2013
C-6 June 2013
E-5 February 2015
E-6 April 2015
E-7 June 2015
E-8 November 2015
F-5 January 2016
F-6 April 2016
F-7 September 2016
F-8 October 2016
G-5 January 2017
G-6 June 2017
H-5 April 2018

CRMR48-18M

B-5 February 2012
C-5 January 2013
C-6 May 2013
C-7 November 2013
D-5 January 2014
D-6 July 2014
D-7 August 2014
D-8 September 2014
E-5 January 2015
E-6 April 2015
E-7 June 2015
E-8 November 2015
F-5 January 2016
F-6 March 2016
F-7 August 2016
F-8 October 2016
G-5 January 2017
G-6 June 2017
H-5 January 2018

CRMR48-18MD2

G-5 March 2017
G-6 June 2017
H-5 May 2018

CRMR48-18MD4

D-5 April 2014
E-5 February 2015
E-6 May 2015
E-7 July 2015
E-8 November 2015
F-5 January 2016
F-6 March 2016
F-7 September 2016
F-8 October 2016
G-6 June 2017
H-5 January 2018

Auxiliary Codes Continued

CRMF48

A-5	August 2011
B-5	January 2012
B-6	July 2012
C-5	January 2013
C-6	June 2013
C-7	September 2013
C-8	November 2013
D-5	January 2014
D-6	February 2014
D-7	July 2014
E-5	February 2015
F-5	January 2016
F-6	February 2016
F-7	August 2016
G-5	January 2017
H-5	January 2018

CRMF48-01

D-5	November 2014
E-5	March 2015
F-5	January 2016
F-6	March 2016
F-7	August 2016
G-5	January 2017
H-5	March 2018

CRMF48-D4

E-5	February 2015
E-6	October 2015
F-5	February 2016
F-6	March 2016
F-7	August 2016
G-5	April 2017
H-5	February 2018

CRMF48-W

A-5	December 2011
B-5	February 2012
B-6	July 2012
C-5	March 2013
C-6	June 2013
C-7	November 2013
D-5	January 2014
D-6	March 2014
D-7	July 2014
D-8	October 2014
E-5	January 2015
F-5	January 2016
F-6	March 2016
F-7	August 2016
G-5	January 2017
H-5	January 2018

CRMF48-W01

E-5	June 2015
F-6	April 2016
F-7	August 2016
G-5	January 2017
H-5	June 2018

CRMF48-WD4

E-6	June 2015
F-6	May 2016
F-7	August 2016
G-5	February 2017
H-5	February 2018

Auxiliary Codes Continued

CRMR60

B-5 August 2012
C-5 January 2013
C-6 July 2013
D-5 January 2014
D-6 June 2014
D-7 August 2014
D-9 September 2014
E-5 January 2015
F-5 February 2016
F-6 July 2016
G-5 January 2017
H-5 January 2018

CRMR60-01

F-6 December 2016
G-5 May 2017
H-5 April 2018

CRMR60-D4

E-5 January 2025
E-6 June 2015
F-5 May 2016
F-6 October 2016
G-5 January 2017
H-5 January 2018

CRMR60-W

B-5 August 2012
C-5 January 2013
C-6 October 2013
C-7 November 2013
D-5 January 2014
D-6 June 2014
D-7 July 2014
D-9 November 2014
E-5 February 2015
F-5 February 2016
F-6 July 2017
G-5 January 2017
H-5 January 2018

CRMR60-W01

G-5 February 2017
H-5 July 2018

CRMR60-WD2

G-5 June 2017
H-5 August 2018

CRMR60-WD4

E-5 April 2015
F-5 May 2016
F-6 October 2016
G-5 April 2017
H-5 January 2018

CRMR60-8

C-5 May 2013
C-6 July 2013
C-7 September 2013
E-6 April 2015
E-7 June 2015
E-8 September 2015
E-9 November 2015
F-6 March 2016
F-7 August 2016
G-5 May 2017
H-5 January 2018

CRMR60-12

C-5 April 2013
C-6 June 2013
D-6 May 2014
D-7 July 2014
D-8 August 2014
D-9 September 2014
E-5 February 2015
E-6 April 2015
E-7 July 2015
E-8 September 2015
E-9 November 2015
F-5 February 2016
F-6 June 2016
F-7 August 2016
F-8 October 2016
G-5 January 2017
G-6 July 2017
H-5 January 2018

CRMR60-16

C-5 February 2013
C-6 May 2013
C-7 September 2013
D-6 February 2014
D-7 July 2014
D-8 August 2014
D-9 September 2014
E-5 January 2015
E-6 April 2015
E-7 June 2015
E-8 October 2015
E-9 November 2015
F-5 January 2016
F-6 March 2016
F-7 August 2016
F-8 December 2016
G-5 January 2017
G-6 June 2017
H-5 January 2018
H-6 August 2018

CRMR60-12M

C-5 March 2013
C-6 May 2013
C-7 September 2013
E-6 May 2015
E-7 June 2015
E-8 September 2015
F-6 July 2016
F-7 August 2016
F-8 October 2016
G-5 January 2017
G-6 June 2017
H-5 January 2018

Auxiliary Codes Continued

CRMR60-18M

C-5 March 2013
C-6 May 2013
C-7 September 2013
C-8 November 2013
D-6 May 2014
D-9 September 2014
E-5 January 2015
E-6 May 2015
E-7 June 2015
E-8 September 2015
E-9 November 2015
F-6 March 2016
F-7 August 2016
F-8 October 2016
G-5 February 2017
G-6 June 2017
H-5 February 2018

CRMR60-24M

C-5 February 2013
C-6 May 2013
C-7 July 2013
C-8 November 2013
D-5 January 2014
D-6 February 2014
D-7 July 2014
D-8 August 2014
D-9 September 2014
E-5 January 2015
E-6 May 2015
E-7 July 2015
E-8 September 2015
E-9 November 2015
F-5 January 2016
F-6 March 2016
F-7 August 2016
F-8 November 2016
G-5 January 2017
G-6 June 2017
H-5 January 2018

CRMR60-24MD2

G-5 May 2017
H-5 March 2018

CRMR60-24MD4

E-5 February 2015
E-6 May 2015
E-7 July 2015
E-8 September 2015
E-9 November 2015
F-6 May 2016
F-7 August 2016
F-8 November 2016
G-5 January 2017
G-6 July 2017
H-5 February 2018

CRMF60

C-5 January 2013
C-6 September 2013
C-7 November 2013
D-6 March 2014
D-8 September 2014
E-5 March 2015
F-5 January 2016
F-6 September 2016
G-5 January 2017
H-5 January 2018

CRMF60-W

C-5 February 2013
C-6 September 2013
C-7 November 2013
D-5 January 2014
D-6 April 2014
D-7 July 2014
E-5 February 2015
F-5 January 2016
F-6 November 2016
G-5 February 2017
H-5 January 2018

CRMF60-W01

H-5 August 2018

Auxiliary Codes Continued

CRMR72

B-5	July 2012
C-5	January 2013
C-6	June 2013
C-7	December 2013
D-5	April 2014
D-6	June 2014
D-7	July 2014
E-5	January 2015
F-5	January 2016
F-6	November 2016
G-5	January 2017
H-5	January 2018

CRMR72-01

G-5	May 2017
H-5	March 2018

CRMR72-D6

D-5	December 2014
E-5	May 2015
F-5	March 2016
F-6	October 2016
G-5	March 2017
H-5	February 2018

CRMR72-W

B-5	August 2012
C-5	January 2013
C-6	June 2013
D-5	February 2014
D-6	July 2014
D-7	August 2014
E-5	February 2015
F-5	January 2016
F-6	November 2016
G-5	January 2017
H-5	January 2018

CRMR72-W01

G-5	May 2017
H-5	May 2018

CRMR72-WD6

E-5	March 2015
E-7	June 2015
F-5	March 2016
G-5	April 2017
H-5	May 2018

CRMR72-12

C-5	April 2013
C-6	June 2013
C-7	September 2013
D-8	August 2014
D-9	October 2014
E-5	March 2015
E-6	April 2015
E-7	June 2015
E-8	October 2015
E-9	November 2015
F-5	January 2016
F-6	June 2016
F-7	September 2016
F-8	November 2016
G-5	May 2017
G-6	June 2017
H-5	February 2018

CRMR72-16

C-5	April 2013
C-6	June 2013
C-7	September 2013
E-7	June 2015
E-9	November 2015
F-5	March 2016
F-6	April 2016
F-7	August 2016
F-8	October 2016
G-5	April 2017
H-5	January 2018

CRMR72-18

C-5	February 2013
C-6	July 2013
C-7	September 2013
C-8	November 2013
D-6	February 2014
D-7	July 2014
D-8	August 2014
D-9	September 2014
E-5	January 2015
E-6	April 2015
E-7	June 2015
E-8	October 2015
E-9	November 2015
F-5	January 2016
F-6	April 2016
F-7	August 2016
F-8	October 2016
G-5	January 2017
G-6	June 2017
H-5	January 2018

CRMR72-18M

C-5	May 2016
C-6	July 2013
C-7	October 2013
C-8	November 2013
D-8	September 2014
E-6	May 2015
E-7	June 2015
E-8	October 2015
F-6	March 2016
F-7	August 2016
F-8	October 2016
G-5	January 2017
H-5	January 2018

Auxiliary Codes Continued

CRMR72-24M

C-5 May 2013
C-6 August 2013
C-7 September 2013
D-8 August 2014
E-6 May 2015
E-8 October 2015
E-9 November 2015
F-6 May 2016
F-7 August 2016
F-8 December 2016
G-5 March 2017
G-6 July 2017
H-5 February 2018

CRMR72-30M

C-5 January 2013
C-6 May 2013
C-7 July 2013
C-8 November 2013
D-5 January 2014
D-6 February 2014
D-7 July 2014
D-8 August 2014
D-9 November 2014
E-5 January 2015
E-6 May 2015
E-7 June 2015
E-8 September 2015
E-9 November 2015
F-5 January 2016
F-6 March 2016
F-7 August 2016
F-8 October 2016
G-5 January 2017
G-6 June 2017
H-5 January 2018

CRMR72-30MD4

G-6 August 2017
H-5 January 2018

CRMR72-30MD4

G-6 July 2017
H-5 January 2018

CRMR72-30MD6

E-5 January 2015
F-5 February 2016
F-6 April 2016
F-7 August 2016
F-8 October 2016
G-5 February 2017
G-6 August 2017
G-7 June 2017
H-5 February 2018

Model Codes

The model number code breakdown is as follows: CRMR__ and CRMF__

C – Commercial Series

RM – Rear Mount

R – Refrigerator

F – Freezer

27, 36, 48, 60, and 72 – width

After Dash (-) Nomenclature:

-GLP01 – Glass Door

-01 – Locks

-W – Worktop

-LP – Low Profile Casters

-LPC – Low Profile Stainless Steel Shelf

-D, -D2, -D4, -D6 – Drawers and Drawer/Door Combination

-8, -12, -16, -18, -24, -30 – Prep Table Number of Pans

-8M, -12M, -16M, -18M, -24M, -30M – Mega Top Number of Pans

Auxiliary Code Breakdown

The auxiliary code is the first two characters in the serial number. The first character indicates the year. Years progress or regress in alphabetical order. The series runs from "A" through "V" and the letters "I" and "O" are skipped. The second character indicates significant part changes within a year. Base is "5" and this number advances for each change. In cases where there is a letter in parentheses, this designates the month. This is the last character in the serial number. The series runs from "(A)" through "(M)" and the letter "(I)" is skipped. This designation is only included when identifying a parts change within an auxiliary code.

Note About Ordering Parts

Most assemblies cannot be ordered as complete units; parts in the assemblies generally must be ordered separately.

A. Main Assembly

CRMR27 and CRMF27 Undercounter, Worktop, and Prep Table

A-5 to H-6

Undercounter, Worktop, Prep Table Common Parts

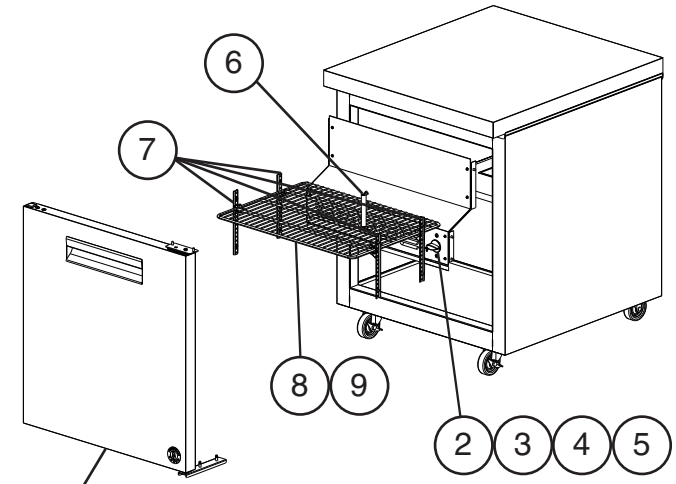

For Door, see Section "C, D, E, or F"

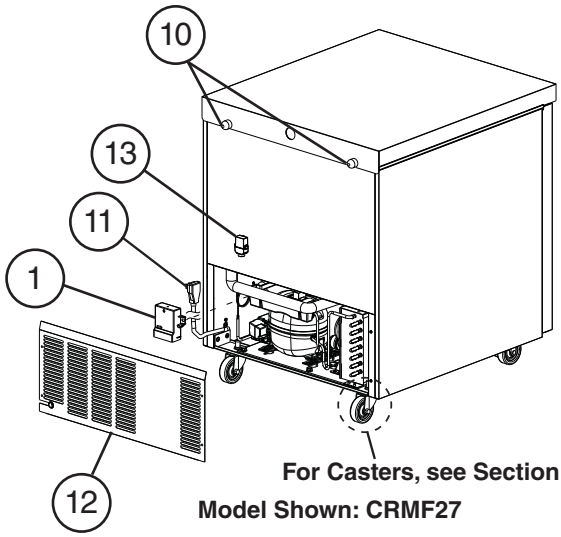

For Casters, see Section "H"

Model Shown: CRMF27

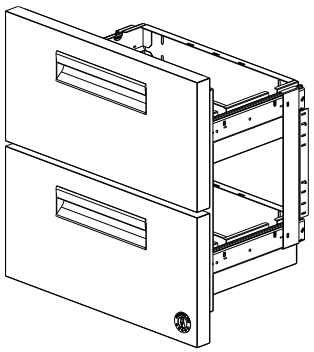

For Drawers, see Section "G"

Prep Table Specific Parts

For Pans, see Section "H"

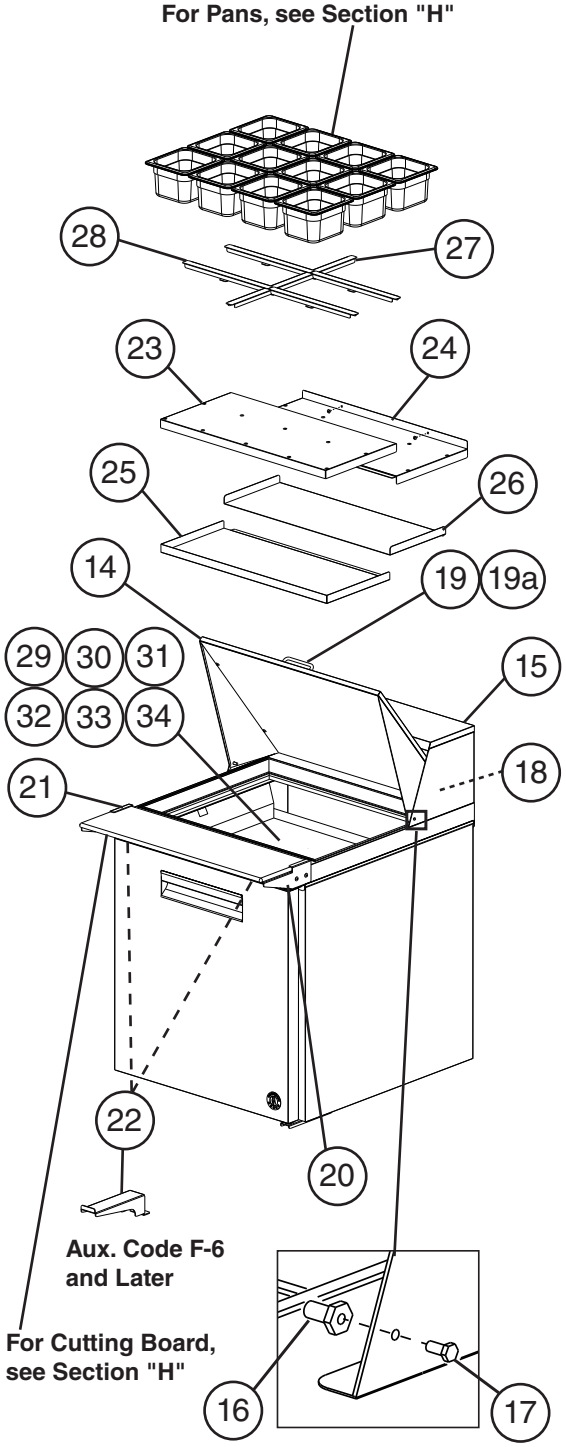

Aux. Code F-6 and Later

For Cutting Board, see Section "H"

Model Shown: CRMR27-12M

Title: A. Main Assembly Models: CRMR27 and CRMF27 Undercounter, Worktop, and Prep Table																
				Required Number												
Index No.	Description	Material or Model Number	Part Number	A-5 to C-5	C-6 to D-5	D-6 to D-7	D-8 to E-5	E-6 E-7	E-8 to F-5 (E)	F-5 (F)	F-6	F-7 to G-5 (A)	G-5 (B)	G-6	H-5 H-6
Common Parts																
1	Control Module	**All UC/WT Refrigerator**	4A5959G02								1	1	1	1	1
		CRMF27-W(-LP)	4A5959G04							1	1	1	1	1	1
		All Freezers Except CRMF27-W(-LP)										1	1	1	1
		All Prep Tables	4A5959G03									1	1	1	1
	Defrost Timer	**CRMF27-W(-LP)**	3A7925-01	1	1	1	1	1	1	-					
		All Freezers Except CRMF27-W(-LP)		1	1	1	1	1	1	1	1	-			
		All Prep Tables					1	1	1	1	1	-			
2	Cabinet Temperature Control (Spindle)	**UC/WT Refrigerator**	3A6755-01	1	1	1	1	1	1	1	-				
			4A5952-01								1	1	1	1	1
		CRMF27-W(-LP)	3A6755-02	1	1	1	1	1	1	-		-			
			4A5952-01							1	1	1	1	1	1
		All Freezers Except CRMF27-W(-LP)	3A6755-02	1	1	1	1	1	1	1	1	-			
			4A5952-01									1	1	1	1
		Prep Table	3A6755-07	1	1	1	1	1	1	1	1	-			
			4A5952-01									1	1	1	1
3	Adapter Plate	**All UC/WT Refrigerator and Prep Tables**	4A5949-01								1	1	-		
		All Freezers								1	1	1	-		
4	Dial Plate		4A5960-01	1	1	1	1	1	1	1	1	1	-		
			4A6031-01										1	1	1
5	Dial Knob	**All UC/WT Refrigerator**	3A6788-01	1	1	1	1	1	1	1	-				
			4A5950-01								1	1	1	1	1
		CRMF27-W(-LP)	3A6788-01	1	1	1	1	1	1	-		-			
			4A5950-01							1	1	1	1	1	1
		All Freezers Except CRMF27-W(-LP) and All Prep Tables	3A6788-01	1	1	1	1	1	1	1	1	-			
			4A5950-01									1	1	1	1
6	Cabinet Thermometer		461083-01	1	1	1	1	1	1	1	1	1	1	1	1
7	Side Pilaster		4A5417-01	4	-										
		Note: When using 4A5719-01 on Aux. Code C-6 through E-5, rotate pilaster 180 degrees.	4A5719-01		4	4	4	-							
			4A5854-01					4	4	4	4	4	4	4	4
8	Shelf		3A2830-07	1	1	1	1	1	1	1	1	1	1	1	1
9	Shelf Clip		4A5418-01	4	4	4	4	4	4	4	4	4	4	4	4
10	Bumper		3A6696-01	2	2	2	2	2	2	2	2	2	2	2	2
11	Power Cord		4A2860-01	1	1	1	1	1	1	1	1	1	1	1	1
12	Rear Panel		1A2260-01	1	1	1	1	1	1	1	1	1	1	1	1
13	Pressure Relief Valve		4A5694-01			1	1	1	1	1	1	1	1	1	1

Title: A. Main Assembly Models: CRMR27 and CRMF27 Undercounter, Worktop, and Prep Table																
				Required Number												
Index No.	Description	Material or Model Number	Part Number	A-5 to C-5	C-6 to D-5	D-6 to D-7	D-8 to E-5	E-6 E-7	E-8 to F-5 (E)	F-5 (F)	F-6	F-7 to G-5 (A)	G-5 (B)	G-6	H-5 H-6
Prep Table Specific Parts																
14	Rail Cover	**-8, -8D** (includes items 18 through 19a)	3A7326A01	1	1	1	1	1	1	1	1	1	1	-	
		-8, -8D (includes items 16 through 19a)	3A9410A01											1	1
		-12M, -12MD (includes items 18 through 19a)	3A7328A01	1	1	1	1	1	1	1	1	1	1	-	
		-12M, -12MD (includes items 16 through 19a)	3A9411A01											1	1
15	Rail Hood	(includes items 16 and 17)	3A7325A01	1	1	1	1	1	1	1	1	1	1	-	
			3A9407A01											1	1
16	Pivot Pin		4A4768-01	2	2	2	2	2	2	2	2	2	2	2	2
17	Pivot Bolt		4A4769-01	2	2	2	2	2	2	2	2	2	2	2	2
18	Tree Clip		4A0579-01	2	2	2	2	2	2	2	2	2	2	2	2
19	Handle		1A3416-01	1	1	1	1	1	1	1	1	1	1	1	1
19a	Pan Head Screw		7C12I1412	2	2	2	2	2	2	2	2	2	2	2	2
20	Right Cutting Board Bracket	**-8, -8D**	4A5496-02	1	1	1	1	-							
			3A8653-02					1	1	1	-				
			3A8971-02								1	1	1	1	1
		-12M, -12MD	1000000393	1	1	1	1	-							
			SP-5198					1	1	1	-				
			3A8971-02								1	1	1	1	1
21	Left Cutting Board Bracket	**-8, -8D**	4A5496-01	1	1	1	1	-							
			3A8653-01					1	1	1	-				
			3A8971-01								1	1	1	1	1
		-12M, -12MD	1000000392	1	1	1	1	-							
			SP-5198					1	1	1	-				
			3A8971-01								1	1	1	1	1
22	Center Cutting Board Bracket	**-8, -8D**	4A5905-01								1	1	1	1	1
		12M, -12MD (Qty varies by Auxiliary Code)	4A5898-01								2	2	2	2	2
23	Upper Front Air Distribution Table Panel	**-8, -8D, -12M, -12MD**	2A6920-01	1	1	-									
24	Upper Rear Air Distribution Table Panel		2A6919-01	1	1	-									
25	Lower Front Air Distribution Table Panel		2A6922-01	1	1	-									
26	Lower Rear Air Distribution Table Panel		2A6921-01	1	1	-									

Title: A. Main Assembly Models: CRMR27 and CRMF27 Undercounter, Worktop, and Prep Table																
				Required Number												
Index No.	Description	Material or Model Number	Part Number	A-5 to C-5	C-6 to D-5	D-6 to D-7	D-8 to E-5	E-6 E-7	E-8 to F-5 (E)	F-5 (F)	F-6	F-7 to G-5 (A)	G-5 (B)	G-6	H-5 H-6	
27	Rail Divider (front-to-back)	**-8, -8D** (HS-5187)	3A8903-01	E-7 and earlier must order items 26 and 27					1	1	1	1	1	1	1	
		-12M, -12MD (HS-5184)	3A8855-01						1	1	1	1	1	1	1	
28	Rail Divider (side-to-side)	**-8, -8D** (HS-5185)	3A8856-01						2	2	2	2	2	2	2	
		-12M, -12MD (HS-5185)							4	4	4	4	4	4	4	
29	Spill Guard (includes items 30 through 34)	**-8, -8D** (HS-5220)	1A4219-01												1	
		-12M, -12MD (HS-5207)	1A4115-01												1	
30	Handle		4A4518-01												1	
31	Handle Bracket		4A5927-01												1	
32	Pan Head Screw	8×32	7C12I0812												2	
33	Split Lock Washer		7L22I0832												2	
34	Flat Washer		7W22I0832												2	

A. Main Assembly

CRMR36 Undercounter, Worktop, and Prep Table

F-5 to H-5

Undercounter, Worktop, Prep Table Common Parts

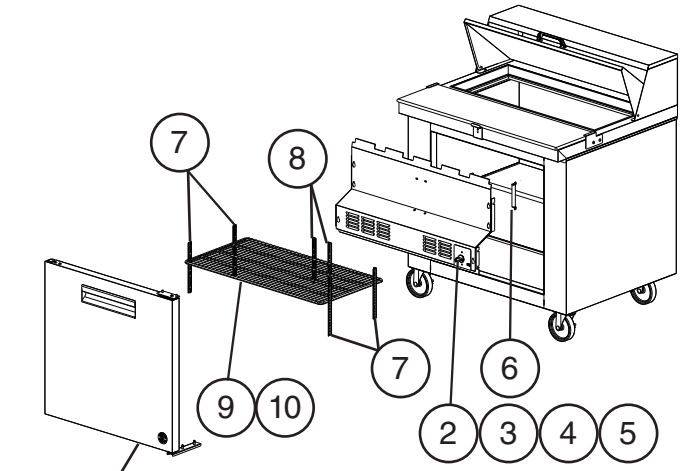

For Door, see Section "C, D, E, or F"

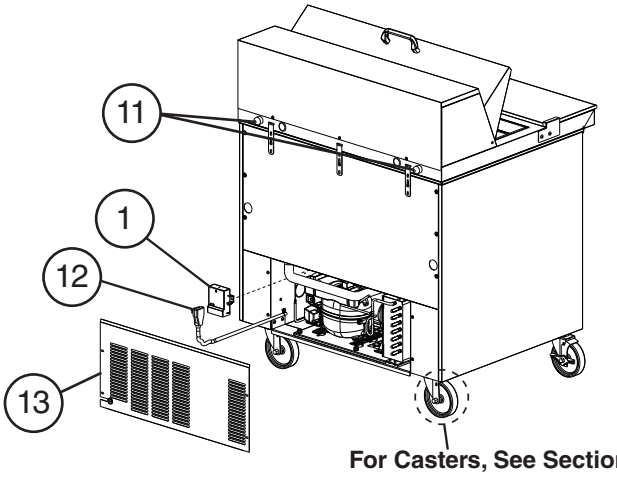

For Casters, See Section "H"

Model Shown: CRMR36-10

Prep Table Specific Parts

For Pans, See Section "H"

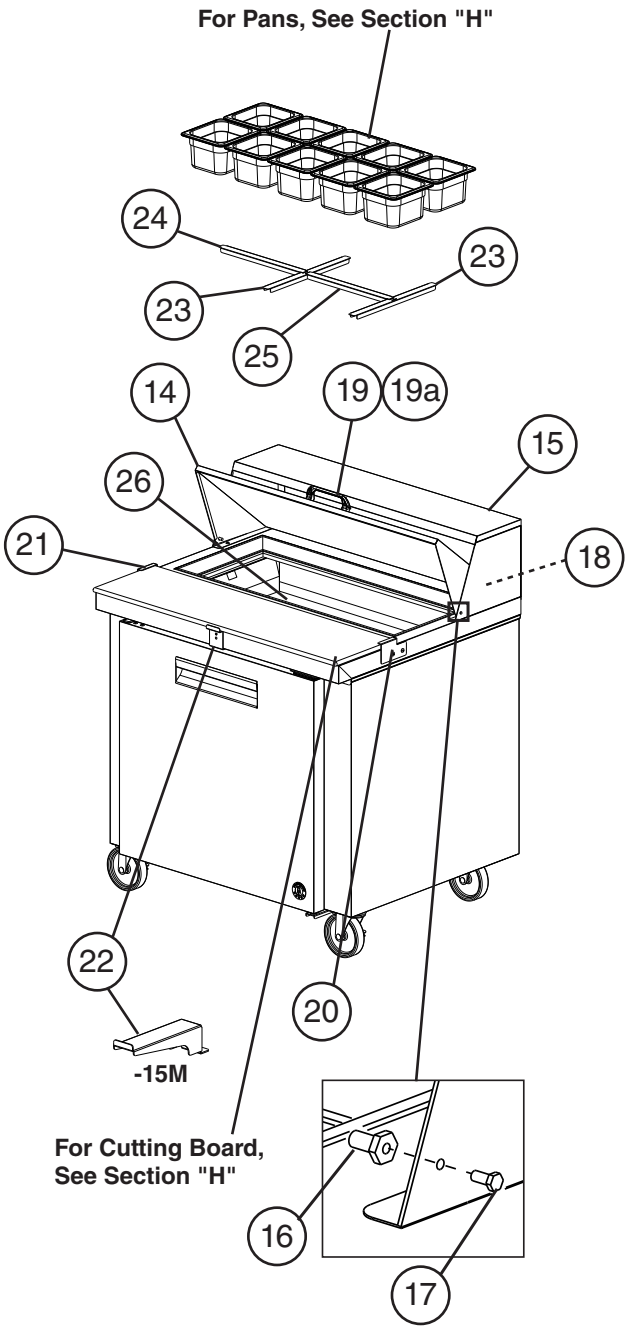

-15M

For Cutting Board, See Section "H"

Model Shown: CRMR36-10

Title: A. Main Assembly		Models: CRMR36 Undercounter, Worktop, and Prep Table										
				Required Number								
Index No.	Description	Material or Model Number	Part Number	F-5 to G-6	G-7	H-5						
Common Parts												
1	Control Module	**UC/WT**	4A5959G02	1	1	1						
		All Prep Table	4A5959G03	1	1	1						
2	Cabinet Temperature Control (Spindle)		4A5952-01	1	1	1						
3	Adapter Plate		4A5949-01	1	1	1						
4	Dial Plate		4A5960-01	1	1	1						
5	Dial Knob		4A5950-01	1	1	1						
6	Cabinet Thermometer		461083-01	1	1	1						
7	Side Pilaster		4A5719-01	4	4	4						
8	Center Pilaster		4A5417-01	2	2	2						
9	Shelf		3A6876-05	1	1	1						
10	Shelf Clip		4A5418-01	6	6	6						
11	Bumper		3A6696-01	2	2	2						
12	Power Cord		4A2860-01	1	1	1						
13	Rear Panel		1A2836-01	1	1	1						
Prep Table Specific Parts												
14	Rail Cover (includes items 18 through 19a)	**-10** (includes items 18 through 19a)	3A9154A01	1	-							
		-10 (includes items 16 through 19a)	3A9408A01		1	1						
		-15M (includes items 18 through 19a)	3A9155A01	1	-							
		-15M (includes items 16 and 19a)	3A9409A01		1	1						
15	Rail Hood	(includes items 16 and 17)	3A9153A01	1	-							
			3A9406A01		1	1						
16	Pivot Pin		4A4768-01	2	2	2						
17	Pivot Bolt		4A4769-01	2	2	2						
18	Tree Clip		4A0579-01	2	2	2						
19	Handle		1A3416-01	1	1	1						
19a	Pan Head Screw		7C12I1412	2	2	2						

Title: A. Main Assembly		Models: CRMR36 Undercounter, Worktop, and Prep Table										
				Required Number								
Index No.	Description	Material or Model Number	Part Number	F-5 to G-6	G-7	H-5						
20	Right Cutting Board Bracket	**-10, -15M**	3A8971-02	1	1	1						
21	Left Cutting Board Bracket	**-10, -15M**	3A8971-01	1	1	1						
22	Center Cutting Board Bracket	**-10**	4A5905-01	1	1	1						
		-15M	4A5898-01	3	3	3						
23	Rail Divider (front-to-back)	**-10** (HS-5187)	3A8903-01	2	2	2						
		-15M (HS-5184)	3A8855-01	2	2	2						
24	Rail Divider (side-to-side outer)	**-10** (HS-5185)	3A8856-01	1	1	1						
		-15M (HS-5185)		2	2	2						
25	Rail Divider (side-to-side center)	**-10** (HS-5186)	3A8857-01	1	1	1						
		-15M (HS-5186)		2	2	2						
26	Spill Guard	**-10** (HS-5221)	1A4219-02			1						
		-15M (HS-5222)	1A4219-03			1						

A. Main Assembly

CRMR48 and CRMF48 Undercounter, Worktop, and Prep Table

A-5 to H-5

Undercounter, Worktop, Prep Table Common Parts

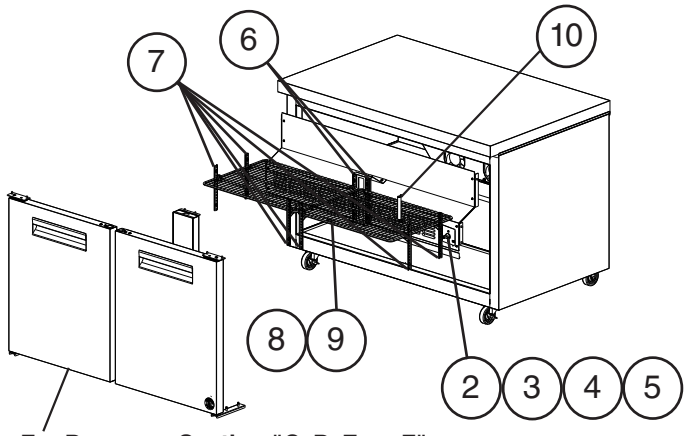

For Door, see Section "C, D, E, or F"

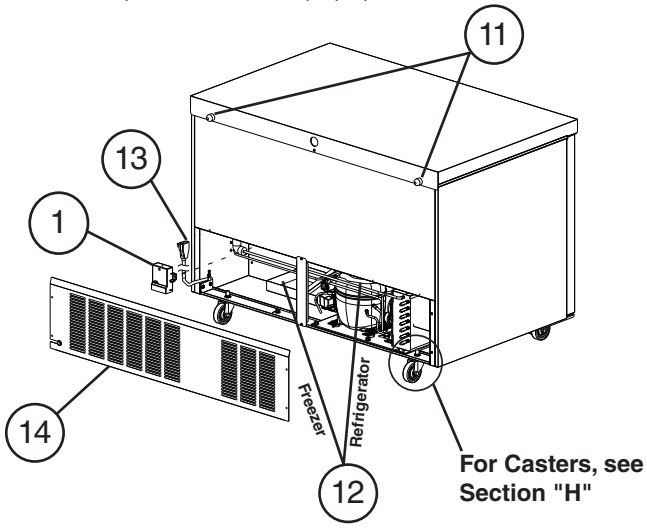

For Casters, see Section "H"

Model Shown: CRMF48

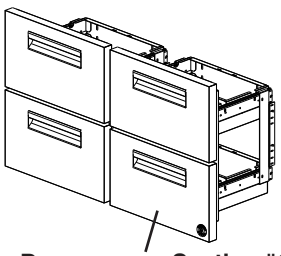

For Drawers, see Section "G"

Prep Table Specific Parts

For Pans, see Section "H"

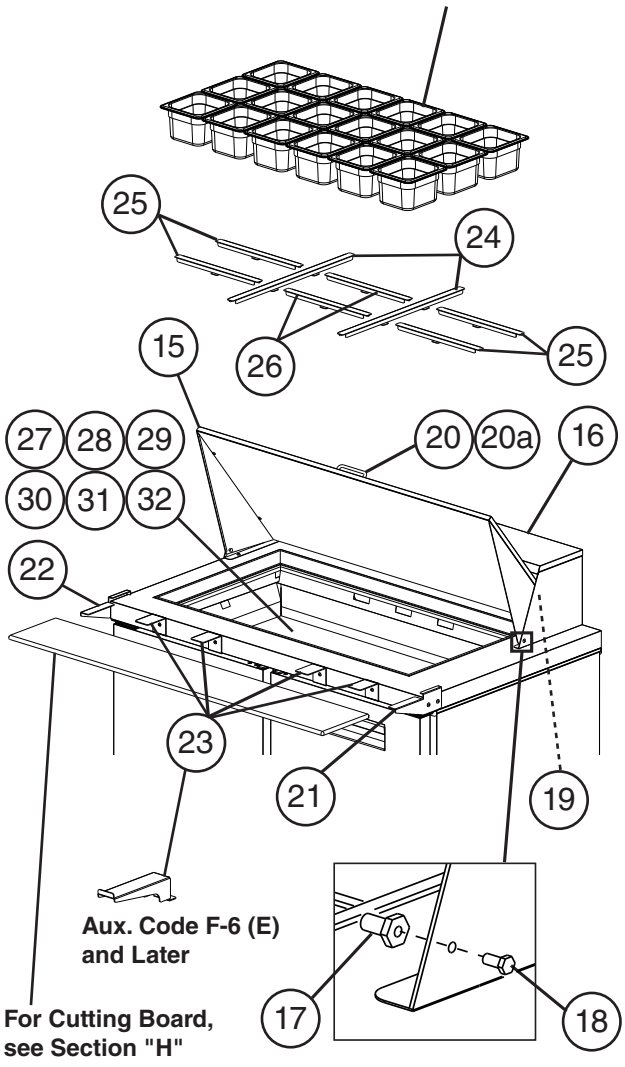

Aux. Code F-6 (E) and Later

For Cutting Board, see Section "H"

Model Shown: CRMR48-18M

Title: A. Main Assembly		Models: CRMR48 and CRMF48 Undercounter, Worktop, and Prep Table													
				Required Number											
Index No.	Description	Material or Model Number	Part Number	A-5 to C-5 (C)	C-5 (D) to E-5 (B)	E-5 (C)	E-6 to E-7	E-8 to F-5	F-6 to F-6 (E)	F-6 (F)	F-6 (G)	F-6 (H)	F-7 to G-5 (E)	G-5 (F) to G-6	H-5
		Common Parts													
1	Control Module	**CRMR48(-W)**	4A5959G02									1	1	1	1
		All UC/WT Refrigerators Except CRMR48(-W)											1	1	1
		CRMF48(-W)	4A5959G04							1	1	1	1	1	1
		All Freezers Except CRMF48(-W)									1	1	1	1	1
		All Prep Tables	4A5959G03										1	1	1
	Defrost Timer	**CRMF48(-W)**	3A7925-01	1	1	1	1	1	1	-					
		All Freezers Except CRMF48(-W)		1	1	1	1	1	1	1	-				
		All Prep Tables		1	1	1	1	1	1	1	1	1	-		
2	Cabinet Temperature Control (Spindle) (SP-5241 includes item 1. Control Module)	**CRMR48(-W)**	3A6755-01	1	1	1	1	1	1	1	1	-			
			4A5952-01									1	1	1	1
		All UC/WT Refrigerators Except CRMR48(-W)	3A6755-01	1	1	1	1	1	1	1	1	1	-		
			4A5952-01										1	1	1
		CRMF48(-W)	SP-5241	1	1	1	1	1	1	-					
			4A5952-01							1	1	1	1	1	1
		All Freezers Except CRMF48(-W)	SP-5241	1	1	1	1	1	1	1	-				
			4A5952-01								1	1	1	1	1
		All Prep Tables	3A6755-07	1	1	1	1	1	1	1	1	1	-		
			4A5952-01										1	1	1
3	Adapter Plate	**CRMR48(-W)**	4A5949-01									1	1	1	1
		All UC/WT Refrigerators Except CRMR48(-W)											1	1	1
		CRMF48(-W)								1	1	1	1	1	1
		All Freezers Except CRMF48(-W)									1	1	1	1	1
		All Prep Tables											1	1	1

Title: A. Main Assembly Models: CRMR48 and CRMF48 Undercounter, Worktop, and Prep Table															
				Required Number											
Index No.	Description	Material or Model Number	Part Number	A-5 to C-5 (C)	C-5 (D) to E-5 (B)	E-5 (C)	E-6 to E-7	E-8 to F-5	F-6 to F-6 (E)	F-6 (F)	F-6 (G)	F-6 (H)	F-7 to G-5 (E)	G-5 (F) to G-6	H-5
4	Dial Plate Label	**CRMR48(-W)**	3A6787-01	1	1	1	1	1	1	1	1	-			
			4A5960-01									1	1	1	1
		All UC/WT Refrigerators Except CRMR48(-W)	3A6787-01	1	1	1	1	1	1	1	1	1	-		
			4A5960-01										1	1	1
		CRMF48(-W)	3A6787-01	1	1	1	1	1	1	-					
			4A5960-01							1	1	1	1	1	1
		All Freezers Except CRMF48(-W)	3A6787-01	1	1	1	1	1	1	1	-				
			4A5960-01								1	1	1	1	1
		All Prep Tables	3A6787-01	1	1	1	1	1	1	1	1	1	-		
			4A5960-01										1	1	1
5	Dial Knob	**CRMR48(-W)**	3A6788-01	1	1	1	1	1	1	1	1	-			
			4A5950-01									1	1	1	1
		All UC/WT Refrigerators Except CRMR48(-W)	3A6788-01	1	1	1	1	1	1	1	1	1	-		
			4A5950-01										1	1	1
		CRMF48(-W)	3A6788-01	1	1	1	1	1	1	-					
			4A5950-01							1	1	1	1	1	1
		All Freezers Except CRMF48(-W)	3A6788-01	1	1	1	1	1	1	1	-				
			4A5950-01								1	1	1	1	1
		All Prep Tables	3A6787-01	1	1	1	1	1	1	1	1	1	-		
			4A5960-01										1	1	1
6	All Pilasters		4A5417-01	8	-										
	Center Back Pilasters				2	2	2	2	2	2	2	2	2	2	2
7	Sides and Front Pilaster	**All UC/WT/ Prep Tables**	4A5524-01		6	-									
			4A5719-01			6	6	6	6	6	6	6	6	6	6
		Door/Drawer										4	4	4	4
8	Shelf	**All UC/WT/ Prep Tables**	3A2830-08	2	2	2	2	2	2	2	2	2	2	2	2
		Door/Drawer										1	1	1	1
9	Shelf Clip	**All UC/WT/ Prep Tables**	4A5418-01	8	8	8	8	8	8	8	8	8	8	8	8
		Door/Drawer										4	4	4	4
10	Cabinet Thermometer		461083-01	1	1	1	1	1	1	1	1	1	1	1	1
11	Bumpers		3A6696-01	2	2	2	2	2	2	2	2	2	2	2	2
12	Condensate Pan	**All UC/WT/ Prep Tables**	3A6758-01	1	1	1	1	1	1	1	1	1	1	1	1
		All Freezers	2A7170-03	1	-										
			1A3373-01		1	1	1	1	1	1	1	1	1	1	1
13	Power Cord		4A2860-01	1	1	1	1	1	1	1	1	1	1	1	1
14	Rear Panel	**All UC/WT/ Prep Tables**	1A2261-01	1	1	1	1	1	1	1	1	1	1	1	1
		All Freezers	1A2340-01	1	1	1	1	1	1	1	1	1	1	1	1

Title: A. Main Assembly		Models: CRMR48 and CRMF48 Undercounter, Worktop, and Prep Table													
				Required Number											
Index No.	Description	Material or Model Number	Part Number	A-5 to C-5 (C)	C-5 (D) to E-5 (B)	E-5 (C)	E-6 to E-7	E-8 to F-5	F-6 to F-6 (E)	F-6 (F)	F-6 (G)	F-6 (H)	F-7 to G-5 (E)	G-5 (F) to G-6	H-5
Prep Table Specific Parts															
15	Rail Cover Assembly	**-8** (includes items 19 through 20a)	3A7330A01	1	1	1	1	1	1	1	1	1	1	-	
		-8 (includes items 17 through 20a)	3A9405A01											1	1
		-12, -12D2, -12D4 (includes items 19 through 20a)	3A7331A01	1	1	1	1	1	1	1	1	1	1	-	
		-12, -12D2, -12D4 (includes items 17 through 20a)	3A9398A01											1	1
		-12M (includes items 19 through 20a)	3A7332A01	1	1	1	1	1	1	1	1	1	1	-	
		-12M (includes items 17 through 20a)	3A9402A01											1	1
		-18M, -18MD2, -18MD4 (includes items 19 through 20a)	3A7333A01	1	1	1	1	1	1	1	1	1	1	-	
		-18M, -18MD2, -18MD4 (includes items 17 through 20a)	3A9399A01											1	1
16	Rail Hood	**-8** (includes items 17 and 18)	3A7327A01	1	1	1	1	1	1	1	1	1	1	-	
		-8	3A9404A01											1	1
		-12M (includes items 17 and 18)	3A7327A01	1	1	1	1	1	1	1	1	1	1	-	
		-12M	3A9403A01											1	1
		-12, -12D2, -12D4 (includes items 17 and 18)	3A7329A01	1	1	1	1	1	1	1	1	1	1	-	
		-12,-12D2, -12D4	3A9394A01											1	1
		-18M, -18MD2, -18MD4 (includes items 17 and 18)	3A7329A01	1	1	1	1	1	1	1	1	1	1	-	
		-18M, -18MD2, -18MD4	3A9395A01											1	1
17	Pivot Pin		4A4768-01	2	2	2	2	2	2	2	2	2	2	2	2
18	Pivot Bolt		4A4769-01	2	2	2	2	2	2	2	2	2	2	2	2

Title: A. Main Assembly Models: CRMR48 and CRMF48 Undercounter, Worktop, and Prep Table															
				Required Number											
Index No.	Description	Material or Model Number	Part Number	A-5 to C-5 (C)	C-5 (D) to E-5 (B)	E-5 (C)	E-6 to E-7	E-8 to F-5	F-6 to F-6 (E)	F-6 (F)	F-6 (G)	F-6 (H)	F-7 to G-5 (E)	G-5 (F) to G-6	H-5
19	Tree Clip		4A0579-01	2	2	2	2	2	2	2	2	2	2	2	2
20	Handle		1A3416-01	1	1	1	1	1	1	1	1	1	1	1	1
20a	Pan Head Screw		7C12I1412	2	2	2	2	2	2	2	2	2	2	2	2
21	Right Cutting Board Bracket	**-8, -12, -12D2, -12D4**	4A5496-01	1	1	1	-								
			3A8653-02				1	1	-						
			3A8971-02						1	1	1	1	1	1	1
		-12M, -18M, -18MD2, -18MD4	1000000393	1	1	1	-								
			SP-5199				1	1	-						
			3A8971-02						1	1	1	1	1	1	1
22	Left Cutting Board Bracket	**-8, -12, -12D2, -12D4**	4A5496-02	1	1	1	-								
			3A8653-01				1	1	-						
			3A8971-01						1	1	1	1	1	1	1
		-12M, -18M, -18MD2, -18MD4	1000000392	1	1	1	-								
			SP-5199				1	1	-						
			3A8971-01						1	1	1	1	1	1	1
23	Center Cutting Board Bracket	**-8, -12, -12D2, -12D4**	4A5905-01						2	2	2	2	2	2	2
		-12M, -18M, -18MD2, -18MD4	1000000394	2	2	2	2	2	-						
			4A5898-01						4	4	4	4	4	4	4
24	Rail Divider A (front-to-back)	**-8** (HS-5188)	3A8904-01	E-7 and earlier must order items 24, 25, and if applicable, 26				1	1	1	1	1	1	1	1
		-12, -12D2, 12D4 (HS-5188)						2	2	2	2	2	2	2	2
		-12M (HS-5184)	3A8855-01					1	1	1	1	1	1	1	1
		-18M, -18MD2, -18MD4 (HS-5184)						2	2	2	2	2	2	2	2
25	Rail Divider B (side-to-side)	**-8** (HS-5189)	3A8905-01					1	1	1	1	1	1	1	1
		-12, -12D2, -12D4 (HS-5189)						2	2	2	2	2	2	2	2
		-12M (HS-5185)	3A8856-01					4	4	4	4	4	4	4	4
	(outer side-to-side)	**-18M -18MD2, -18MD4** (HS-5185)						4	4	4	4	4	4	4	4
26	Rail Divider C (center side-to-side)	**-18M, -18MD2, -18MD4** (HS-5186)	3A8857-01					2	2	2	2	2	2	2	2

Title: A. Main Assembly Models: CRMR48 and CRMF48 Undercounter, Worktop, and Prep Table															
				Required Number											
Index No.	Description	Material or Model Number	Part Number	A-5 to C-5 (C)	C-5 (D) to E-5 (B)	E-5 (C)	E-6 to E-7	E-8 to F-5	F-6 to F-6 (E)	F-6 (F)	F-6 (G)	F-6 (H)	F-7 to G-5 (E)	G-5 (F) to G-6	H-5
27	Spill Guard (includes items 28, through 32)	**-8** (HS-5223)	1A4221-01												1
		-12, -12D2, -12D4 (HS-5226)	1A4221-03												1
		-12M (HS-5207)	1A4115-01												1
		-18M, -18MD2, -18MD4 (HS-5213)	1A4154-01												1
28	Handle	**-12M**	4A4518-01												1
		-18M, -18MD2, -18MD4													2
29	Handle Bracket	**-12M**	4A5927-01												1
		-18M, -18MD2, -18MD4													2
30	Pan Head Screw	**-12M**	7C12I0812												2
		-18M, -18MD2, -18MD4													4
31	Split Lock Washer	**-12M**	7L22I0832												2
		-18M, -18MD2, -18MD4													4
32	Flat Washer	**-12M**	7W22I0832												2
		-18M, -18MD2, -18MD4													4

A. Main Assembly

CRMR60 and CRMF60 Undercounter, Worktop, and Prep Table

B-5 to H-5

Undercounter, Worktop, Prep Table Common Parts

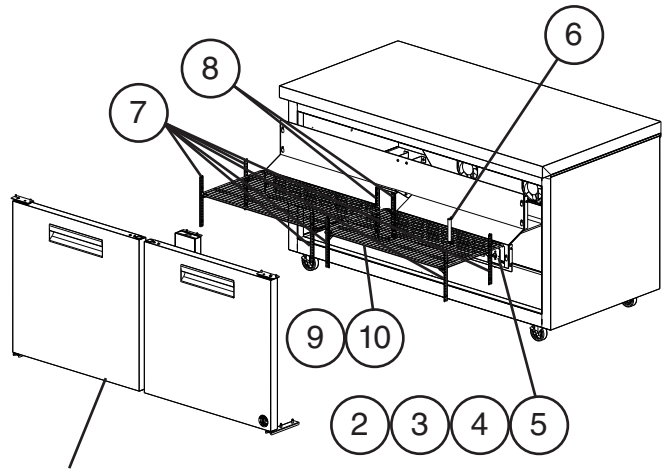

For Door, see Section "C, D, E, or F"

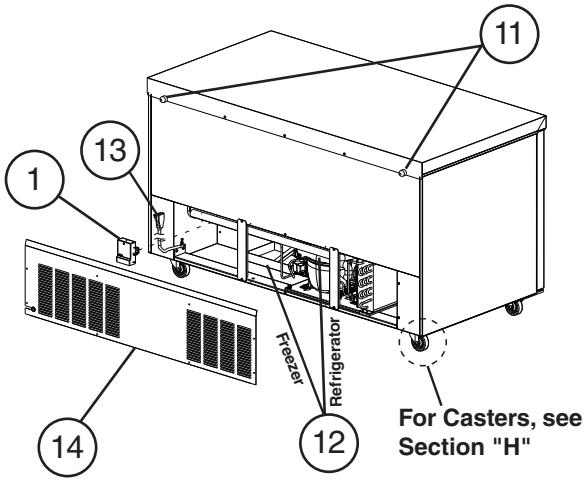

For Casters, see Section "H"

Model Shown: CRMF60

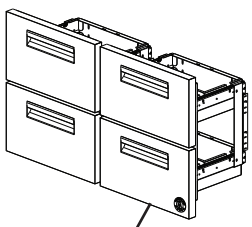

For Drawers, see Section "G"

Prep Table Specific Parts

For Pans, see Section "H"

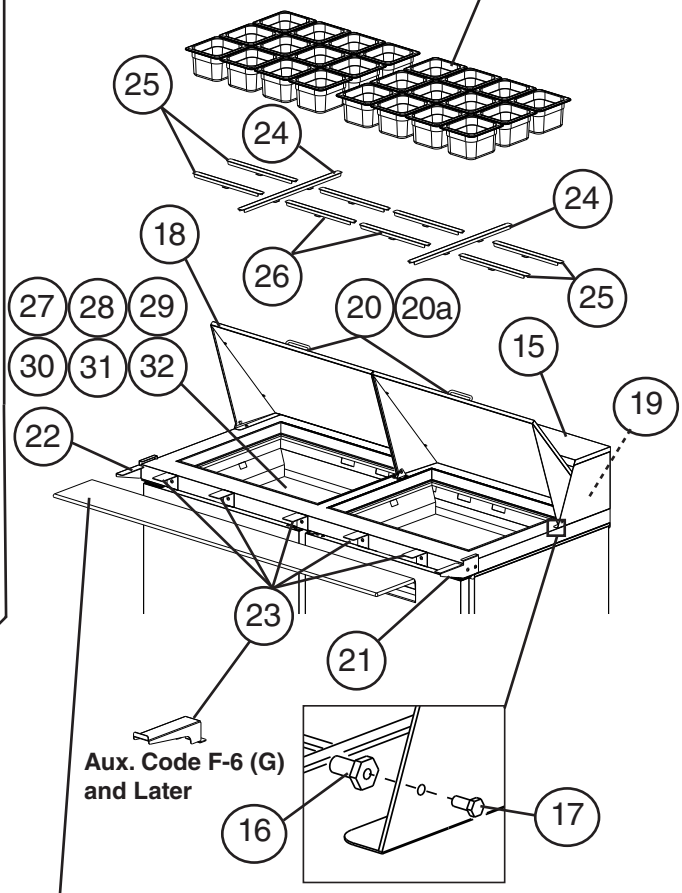

Model Shown: CRMR60-24M

For Cutting Board, see Section "H"

Title: A. Main Assembly Models: CRMR60 and CRMF60 Undercounter, Worktop, and Prep Table															
				Required Number											
Index No.	Description	Material or Model Number	Part Number	B-5 to D-5	D-6 to D-7	D-8 to E-5 (B)	E-5 (C)	E-6 to E-8	E-9 to F-5	F-6 to F-6 (F)	F-6 (G)	F-7 to G-5 (A)	G-5 (B)	G-6	H-5
Common Parts															
1	Control Module	**All UC/WT Refrigerators**	4A5959G02							1	1	1	1	1	1
		All Freezers	4A5959G04							1	1	1	1	1	1
		All Prep Tables	4A5959G03									1	1	1	1
	Defrost Timer	**All Freezers**	3A7925-01	1	1	1	1	1	1	-					
		All Prep Tables		1	1	1	1	1	1	1	1	-			
2	Cabinet Temperature Control (Spindle)	**All UC/WT Refrigerators**	3A6755-03	1	1	1	1	1	1	-					
			4A5952-01							1	1	1	1	1	1
		All UC/WT Freezers	3A6755-04	1	1	1	1	1	1	-					
			4A5952-01							1	1	1	1	1	1
		All Prep Tables	3A6755-07	1	1	1	1	1	1	1	1	-			
			4A5952-01									1	1	1	1
3	Adapter Plate		4A5949-01							1	1	1	1	1	1
4	Dial Plate		4A5960-01	1	1	1	1	1	1	1	1	1	1	1	1
5	Dial Knob	**All UC/WT Refrigerators and Freezers**	3A6788-01	1	1	1	1	1	1	-					
			4A5950-01							1	1	1	1	1	1
		Prep Table	3A6788-01	1	1	1	1	1	1	1	1	-			
			4A5950-01									1	1	1	1
6	Cabinet Thermometer		461083-01	1	1	1	1	1	1	1	1	1	1	1	1
7	Side and Front Pilaster		4A5524-01	6	6	6	-								
			4A5719-01				6	6	6	6	6	6	6	6	6
		Door/Drawer										4	4	4	4
8	Rear Pilaster		4A5417-01	2	2	2	2	2	2	2	2	2	2	2	2
9	Shelf		3A2830-09	2	2	2	2	2	2	2	2	2	2	2	2
		Door/Drawer										1	1	1	1
10	Shelf Clip		4A5418-01	8	8	8	8	8	8	8	8	8	8	8	8
		Door/Drawer										4	4	4	4
11	Bumpers		3A6696-01	2	2	2	2	2	2	2	2	2	2	2	2
12	Condensate Pan	**Refrigerator**	3A6758-01	1	1	1	1	1	1	1	1	1	1	1	1
		Freezer	2A7170-03	1	1	-									
			1A3373-01			1	1	1	1	1	1	1	1	1	1
13	Power Cord		4A2860-01	1	1	1	1	1	1	1	1	1	1	1	1
14	Rear Panel	**All UC/WT/**	1A2542-01	1	1	1	1	1	1	1	1	1	1	1	1
		All Freezers/ Prep Tables	1A2692-01	1	1	1	1	1	1	1	1	1	1	1	1

Title: A. Main Assembly Models: CRMR60 and CRMF60 Undercounter, Worktop, and Prep Table															
				Required Number											
Index No.	Description	Material or Model Number	Part Number	B-5 to D-5	D-6 to D-7	D-8 to E-5 (B)	E-5 (C)	E-6 to E-8	E-9 to F-5	F-6 to F-6 (F)	F-6 (G)	F-7 to G-5 (A)	G-5 (B)	G-6	H-5
Prep Table Specific Parts															
15	Rail Hood	**-8** (includes items 16 and 17)	3A7327A01	1	1	1	1	1	1	1	1	1	1	-	
		-8	3A9404A01											1	1
		-12M (includes items 16 and 17)	3A7327A01	1	1	1	1	1	1	1	1	1	1	-	
		-12M	3A9403A01											1	1
		-12 (includes items 16 and 17)	3A7329A01	1	1	1	1	1	1	1	1	1	1	-	
		-12	3A9394A01											1	1
		-18M (includes items 16 and 17)	3A7327A01	1	1	1	1	1	1	1	1	1	1	-	
		-18M	3A9395A01											1	1
		-16 (includes items 16 and 17)	3A7372A01	1	1	1	1	1	1	1	1	1	1	-	
		-16	3A9396A01											1	1
		-24M, -24MD2, -24MD4 (includes items 16 and 17)	3A7372A01	1	1	1	1	1	1	1	1	1	1	-	
		-24M, -24MD2, -24MD4	3A9393A01											1	1
16	Pivot Pin	**-8, -12, -12M, -16, -18M**	4A4768-01	2	2	2	2	2	2	2	2	2	2	2	2
		-24M, -24MD2, -24MD4		4	4	4	4	4	4	4	4	4	4	4	4
17	Pivot Bolt	**-8, -12, -12M, -16, -18M**	4A4769-01	2	2	2	2	2	2	2	2	2	2	2	2
		-24M, -24MD2, -24MD4		4	4	4	4	4	4	4	4	4	4	4	4

Title: A. Main Assembly Models: CRMR60 and CRMF60 Undercounter, Worktop, and Prep Table															
				Required Number											
Index No.	Description	Material or Model Number	Part Number	B-5 to D-5	D-6 to D-7	D-8 to E-5 (B)	E-5 (C)	E-6 to E-8	E-9 to F-5	F-6 to F-6 (F)	F-6 (G)	F-7 to G-5 (A)	G-5 (B)	G-6	H-5
18	Rail Cover	**-8** (includes items 19 through 20a)	3A7330A01	1	1	1	1	1	1	1	1	1	1	-	
		-8 (includes items 16,17, 19 through 20a)	3A9405A01											1	1
		-12 (includes items 19 through 20a)	3A7331A01	1	1	1	1	1	1	1	1	1	1	-	
		-12 (includes items 16,17, 19 through 20a)	3A9398A01											1	1
		-12M (includes items 19 through 20a)	3A7332A01	1	1	1	1	1	1	1	1	1	1	-	
		-12M (includes items 16,17, 19 through 20a)	3A9402A01											1	1
		-16 (includes items 19 through 20a)	3A7346A01	1	1	1	1	1	1	1	1	1	1	-	
		-16 (includes items 16,17, 19 through 20a)	3A9400A01											1	1
		-18M (includes items 19 through 20a)	3A7333A01	1	1	1	1	1	1	1	1	1	1	-	
		-18M (includes items 16,17, 19 through 20a)	3A9399A01											1	1
	(includes 2 of items 16, 17 and all of 19, 20, and 20a)	**-24M, -24MD2, -24MD4**	3A7348A01	2	2	2	2	2	2	2	2	2	2	2	2
19	Tree Clip	**-8, -12, -12M, -16, -18M**	4A0579-01	2	2	2	2	2	2	2	2	2	2	2	2
		24M, -24MD2, -24MD4		3	3	3	3	3	3	3	3	3	3	3	3
20	Handle	**-8, -12, -12M, -16, -18M**	1A3416-01	1	1	1	1	1	1	1	1	1	1	1	1
		-24M, -24MD2, -24MD4		2	2	2	2	2	2	2	2	2	2	2	2
20a	Pan Head Screw	**-8, -12, -12M, -16, -18M**	7C12I1412	2	2	2	2	2	2	2	2	2	2	2	2
		-24M, -24MD2, -24MD4		4	4	4	4	4	4	4	4	4	4	4	4

Title: A. Main Assembly Models: CRMR60 and CRMF60 Undercounter, Worktop, and Prep Table																
				Required Number												
Index No.	Description	Material or Model Number	Part Number	B-5 to D-5	D-6 to D-7	D-8 to E-5 (B)	E-5 (C)	E-6 to E-8	E-9 to F-5	F-6 to F-6 (F)	F-6 (G)	F-7 to G-5 (A)	G-5 (B)	G-6	H-5
21	Right Cutting Board Bracket	**-8, -12, -16,**	4A5496-01	1	1	1	1	-							
			3A8653-02					1	1	1	-				
			3A8971-02								1	1	1	1	1
		-12M, -18M, -24M, -24MD2, -24MD4	1000000393	1	1	1	-								
			SP-5200				1	1	1	-					
			3A8971-02							1	1	1	1	1	1
22	Left Cutting Board Bracket	**-8, -12, -16,**	4A5496-02	1	1	1	1	-							
			3A8653-01					1	1	1	-				
			3A8971-01								1	1	1	1	1
		-12M, -18M, -24M, -24MD2, -24MD4	1000000392	1	1	1	-								
			SP-5200				1	1	1	-					
			3A8971-01							1	1	1	1	1	1
23	Center Cutting Board Bracket	**-8, -12, -16**	4A5905-01								3	3	3	3	3
		-12M, -18M, -24M, -24MD2, -24MD4	1000000394	3	3	3	3	3	3	3	-				
			4A5898-01								5	5	5	5	5
24	Rail Divider (front-to-back)	**-8** (HS-5188)	3A8904-01						1*	1	1	1	1	1	1
		-12 (HS-5188)							2*	2	2	2	2	2	2
		-16 (HS-5188)							3*	3	3	3	3	3	3
		-12M (HS-5184)	3A8855-01						1*	1	1	1	1	1	1
		-18M (HS-5184)							2*	2	2	2	2	2	2
		-24M, -24MD2, -24MD4 (HS-5184)							2*	2	2	2	2	2	2
25	Rail Divider (side-to-side)	**-8** (HS-5189)	3A8905-01						2*	2	2	2	2	2	2
	(outer side-to-side)	**-12** (HS-5189)							3*	2	2	2	2	2	2
		-16 (HS-5189)							4*	2	2	2	2	2	2
	(side-to-side)	**-12M** (HS-5185)	3A8856-01						4*	4	4	4	4	4	4
	(outer side-to-side)	**-18M** (HS-5185)							6*	4	4	4	4	4	4
	(side-to-side)	**-24M, -24MD2, -24MD4** (HS-5185)							8*	8	8	8	8	8	8
26	Rail Divider C (center side to side)	**-12** (HS-5190)	3A8906-01						1*	1	1	1	1	1	1
		-16 (HS-5190)							2*	2	2	2	2	2	2
		-18 (HS-5192)	3A8906-01						1*	1	1	1	1	1	1
		-18M (HS-5186)	3A8857-01						2*	2	2	2	2	2	2

*E-8 and earlier must order 24, 25, and if applicable, 26

Title: A. Main Assembly Models: CRMR60 and CRMF60 Undercounter, Worktop, and Prep Table															
				Required Number											
Index No.	Description	Material or Model Number	Part Number	B-5 to D-5	D-6 to D-7	D-8 to E-5 (B)	E-5 (C)	E-6 to E-8	E-9 to F-5	F-6 to F-6 (F)	F-6 (G)	F-7 to G-5 (A)	G-5 (B)	G-6	H-5
27	Spill Guard (includes items 28 through 32)	**-8** (HS-5223)	1A4221-01												1
		-12 (HS-5226)	1A4221-03												1
		-12M (HS-5207)	1A4115-01												1
		-16 (HS-5223)	1A4221-01												2
		-18M (HS-5213)	1A4154-01												1
		-24M, -24MD2, -24MD4 (HS-5207)	1A4115-01												2
28	Handle	**-12M**	4A4518-01												1
		-16, 18M, -24M, -24MD2, -24MD4													2
29	Handle Bracket	**-12M**	4A5927-01												1
		-16, 18M, -24M, -24MD2, -24MD4													2
30	Pan Head Screw	**-12M**	7C12I0812												2
		-16, 18M, -24M, -24MD2, -24MD4													4
31	Split Lock Washer	**-12M**	7L22I0832												2
		-16, 18M, -24M, -24MD2, -24MD4													4
32	Flat Washer	**-12M**	7W22I0832												2
		-16, 18M, -24M, -24MD2, -24MD4													4

A. Main Assembly

CRMR72 Undercounter, Worktop, and Prep Table

B-5 to H-5

Undercounter, Worktop, Prep Table Common Parts

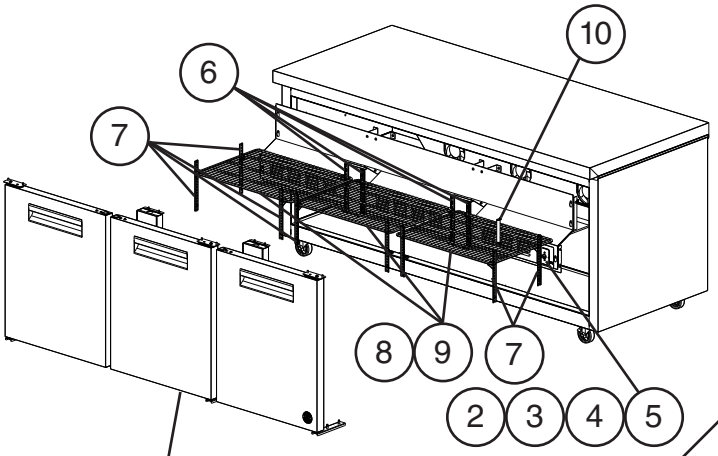

For Door, see Section "C, D, E, or F"

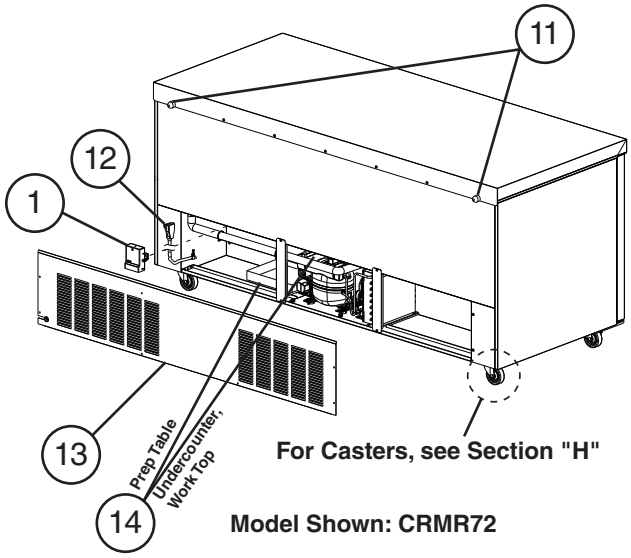

For Casters, see Section "H"

Model Shown: CRMR72

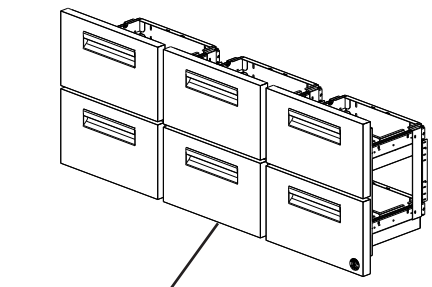

For Drawers, see Section "G"

Prep Table Specific Parts

For Pans, see Section "H"

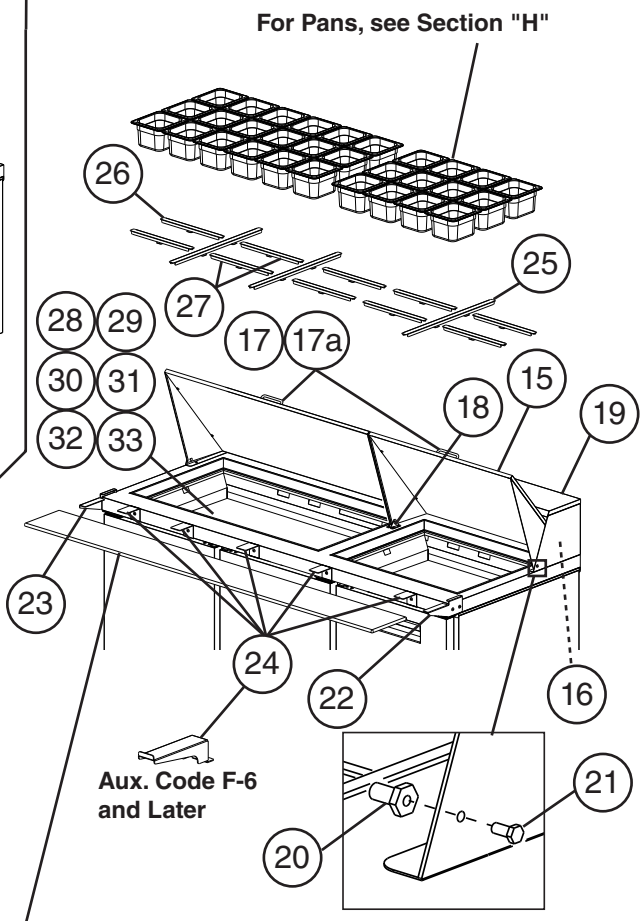

Aux. Code F-6 and Later

Model Shown: CRMR72-30M

For Cutting Board, see Section "H"

Title: A. Main Assembly Models: CRMR72 Undercounter, Worktop, and Prep Table													
				Required Number									
Index No.	Description	Material or Model Number	Part Number	B-5 to D-7	D-8 to E-5	E-6 to E-8	E-9 to F-5 (H)	F-5 (J)	F-6	F-7 to G-5	G-6	H-5	
Common Parts													
1	Control Module	**UC/WT**	4A5959G02					1	1	1	1	1	
		Prep Table	4A5959G03							1	1	1	
	Defrost Timer	**Prep Table**	3A7925-01		1	1	1	1	1	-			
2	Cabinet Temperature Control (Spindle)	**UC/WT**	3A6755-05	1	1	1	1	-					
			4A5952-01					1	1	1	1	1	
		Prep Table	3A6755-05	1	1	1	1	1	1	-			
			4A5952-01							1	1	1	
3	Adapter Plate	**UC/WT**	4A5949-01					1	1	1	1	1	
		Prep Table								1	1	1	
4	Dial Plate		4A5960-01	1	1	1	1	1	1	1	1	1	
5	Dial Knob	**UC/WT**	3A6788-01	1	1	1	1	-					
			4A5950-01					1	1	1	1	1	
		Prep Table	3A6788-01	1	1	1	1	1	1	-			
			4A5950-01							1	1	1	
6	Rear Pilaster		4A5417-01	4	4	4	4	4	4	4	4	4	
		-30MD2								2	2	2	
7	Side and Front Pilaster		4A5524-01	8	8	-							
			4A5719-01			8	8	8	8	8	8	8	
		-30MD2								6	6	6	
		-30MD4								4	4	4	
8	Shelf		3A2830-07	3	3	3	3	3	3	3	3	3	
		-30MD2								2	2	2	
		-30MD4	3A2830-08							1	1	1	
9	Shelf Clip		4A5418-01	12	12	12	12	12	12	12	12	12	
		-30MD2								8	8	8	
		-30MD4								4	4	4	
10	Cabinet Thermometer		461083-01	1	1	1	1	1	1	1	1	1	
11	Bumpers		3A6696-01	2	2	2	2	2	2	2	2	2	
12	Power Cord		4A2860-01	1	1	1	1	1	1	1	1	1	
13	Rear Panel	**All UC/WT**	1A2525-01	1	1	1	1	1	1	1	1	1	
		Prep Tables	1A2668-01	1	1	1	1	1	1	1	1	1	

Title: A. Main Assembly Models: CRMR72 Undercounter, Worktop, and Prep Table												
				Required Number								
Index No.	Description	Material or Model Number	Part Number	B-5 to D-7	D-8 to E-5	E-6 to E-8	E-9 to F-5 (H)	F-5 (J)	F-6	F-7 to G-5	G-6	H-5
Prep Table Specific Parts												
14	Condensate Pan	**UC/WT**	3A6758-01	1	1	1	1	1	1	1	1	1
		Prep Table	2A7170-03	1	-							
			1A3373-01		1	1	1	1	1	1	1	1
15	Rail Cover	**-12** (includes items 16 through 17a)	3A7331A01	1	1	1	1	1	1	1	-	
		-12 (includes items 16 through 17a, 20, 21)	3A9398A01								1	1
		-16 (includes items 16 through 17a)	3A7346A01	1	1	1	1	1	1	1	-	
		-16 (includes items 16 through 17a, 20, 21)	3A9400A01								1	1
		-18 (includes items 16 through 17a)	3A7378A01	1	1	1	1	1	1	1	-	
		-18 (includes items 16 through 17a, 20, 21)	3A9401A01								1	1
		-18M (includes items 16 through 17a)	3A7333A01	1	1	1	1	1	1	1	-	
		-18M (includes items 16 through 17a, 20, 21)	3A9399A01								1	1
		-24M (includes items 16 through 17a)	3A7348A01	1	1	1	1	1	1	1	-	
		-24M (includes items 16 through 17a, 20, 21)	3A9392A01								1	1
		-30M, -30MD2, -30MD4, 30MD6 (includes items 16 through 17a)	SP-5297	1	1	1	1	1	1	1	-	
		-30M, -30MD2, -30MD4, 30MD6 (includes items 16 through 17a, 20, 21)	3A7376A01								1	1
16	Tree Clip	**-12, -16, 18, -18M**	4A0579-01	2	2	2	2	2	2	2	2	2
		-24M, -30M, -30MD2, -30MD4, 30MD6		3	3	3	3	3	3	3	3	3
17	Handle	**-12, -16, -18, -18M**	1A3416-01	1	1	1	1	1	1	1	1	1
		-24M, -30M, -30MD2, -30MD4, -30MD6	1A3416-01	2	2	2	2	2	2	2	2	2

Title: A. Main Assembly Models: CRMR72 Undercounter, Worktop, and Prep Table												
				Required Number								
Index No.	Description	Material or Model Number	Part Number	B-5 to D-7	D-8 to E-5	E-6 to E-8	E-9 to F-5 (H)	F-5 (J)	F-6	F-7 to G-5	G-6	H-5
17a	Pan Head Screws	**-12, -16, -18, -18M**	7C12I1412	2	2	2	2	2	2	2	2	2
		-24M, -30M, -30MD2, -30MD4, -30MD6		4	4	4	4	4	4	4	4	4
18	Rail Cover Bracket	**-24M, -30M, -30MD2, -30MD4, -30MD6**	4A5790-01	2	2	2	2	2	2	2	2	2
19	Rail Hood	**-12** (includes items 20 and 21)	3A7329A01	1	1	1	1	1	1	1	-	
		-12	3A9394A01								1	1
		-18M (includes items 20 and 21)	3A7329A01	1	1	1	1	1	1	1	-	
		-18M	3A9395A01								1	1
		-16 (includes items 20 and 21)	3A7372A01	1	1	1	1	1	1	1	-	
		-16	3A9396A01								1	1
		-18 (includes items 20 and 21)	SP-5298	1	1	1	1	1	1	1	-	
		-18	3A9397A01								1	1
		-24M (includes items 20 and 21)	3A7372A01	1	1	1	1	1	1	1	-	
		-24M	3A9391A01								1	1
		-30M, -30MD2, -30MD4,-30MD6 (includes items 20 and 21)	SP-5298	1	1	1	1	1	1	1	-	
		-30M, -30MD2, -30MD4,-30MD6	3A7373A01								1	1
20	Pivot Pin	**-12, -16, -18, -18M**	4A4768-01	2	2	2	2	2	2	2	2	2
		-24M, -30M, -30MD2, -30MD4, -30MD6		4	4	4	4	4	4	4	4	4
21	Pivot Bolt	**-12, -16, -18, -18M**	4A4769-01	2	2	2	2	2	2	2	2	2
		-24M, -30M, -30MD2, -30MD4, -30MD6		4	4	4	4	4	4	4	4	4
22	Right Cutting Board Bracket	**-12, -16, -18**	4A5496-01	1	1	-						
			SP-5200			1	1	1	-			
			3A8971-02						1	1	1	1
		-18M, -24M, -30M, -30MD2, -30MD4, -30MD6	1000000393	1	1	-						
			SP-5200			1	1	1	-			
			3A8971-02						1	1	1	1

Title: A. Main Assembly Models: CRMR72 Undercounter, Worktop, and Prep Table												
				Required Number								
Index No.	Description	Material or Model Number	Part Number	B-5 to D-7	D-8 to E-5	E-6 to E-8	E-9 to F-5 (H)	F-5 (J)	F-6	F-7 to G-5	G-6	H-5
23	Left Cutting Board Bracket	**-12, -16, -18**	4A5496-02	1	1	-						
			SP-5200			1	1	1	-			
			3A8971-01						1	1	1	1
		-18M, -24M, -30M, -30MD2, -30MD4, -30MD6	1000000392	1	1	-						
			SP-5200			1	1	1	-			
			3A8971-01						1	1	1	1
24	Center Cutting Board Bracket	**-12, -16, -18**	4A5905-01	3	3	3	3	3	3	3	3	3
		-18M, -24M, -30M, -30MD2, -30MD4, -30MD6	1000000394	3	3	3	3	3	-			
			4A5898-01						5	5	5	5
25	Rail Divider (front-to-back)	**-12, -18** (HS-5188)	3A8904-01	E-8 and earlier must order items 25, 26, and if applicable, 27			2	2	2	2	2	2
		-16 (HS-5188)					3	3	3	3	3	3
		-18M (HS-5184)	3A8855-01				2	2	2	2	2	2
		-24M, -30M, -30MD2, -30MD4, -30MD6 (HS-5184)					3	3	3	3	3	3
26	Rail Divider (side-to-side)	**-12** (HS-5189)	3A8905-01				2	2	2	2	2	2
	(outer side to side)	**-16** (HS-5189)					2	2	2	2	2	2
		-18 (HS-5191)	3A8905-02				2	2	2	2	2	2
	(outer side to side)	**-18M, -30MD2, -30MD4** (HS-5185)	3A8856-01				4	4	4	4	4	4
	(side-to-side)	**-24M** (HS-5185)					8	8	8	8	8	8
	(outer side to side)	**-30M, -30MD6** (HS-5185)					8	8	8	8	8	8
27	Rail Divider C (center side-to-side)	**-12** (HS-5190)	3A8906-01				1	1	1	1	1	1
		-16 (HS-5190)					2	2	2	2	2	2
		-18 (HS-5192)	3A8906-02				1	1	1	1	1	1
		-18M, -30M, 30MD2, -30MD4, -30MD6 (HS-5186)	3A8857-01				2	2	2	2	2	2

Title: A. Main Assembly Models: CRMR72 Undercounter, Worktop, and Prep Table													
				Required Number									
Index No.	Description	Material or Model Number	Part Number	B-5 to D-7	D-8 to E-5	E-6 to E-8	E-9 to F-5 (H)	F-5 (J)	F-6	F-7 to G-5	G-6	H-5
28	Spill Guard (includes items 28 through 33)	**-12, -18** (HS-5226)	1A4221-03									1
		-16 (HS-5223)	1A4221-01									1
		-18 (HS-5225)	1A4221-02									1
		-18M, -30M, -30MD2, -30MD4, -30MD6 (HS-5213)	1A4154-01									1
		-24M (HS-5207)	1A4115-01									2
		-30M, -30MD2, -30MD4, -30MD6 (HS-5207)										1
29	Handle	**-18M, -24M**	4A4518-01									2
		-30M, -30MD2, -30MD4, -30MD6										3
30	Handle Bracket	**-18M, -24M**	4A5927-01									2
		-30M, -30MD2, -30MD4, -30MD6										3
31	Pan Head Screw	**-18M, -24M**	7C12I0812									4
		-30M, -30MD2, -30MD4, -30MD6										6
32	Split Lock Washer	**-18M, -24M**	7L22I0832									4
		-30M, -30MD2, -30MD4, -30MD6										6
33	Flat Washer	**-18M, -24M**	7W22I0832									4
		-30M, -30MD2, -30MD4, -30MD6										6

B. Refrigeration Circuit

CRMR27 Undercounter, Worktop, and Prep Table

A-5 to H-5

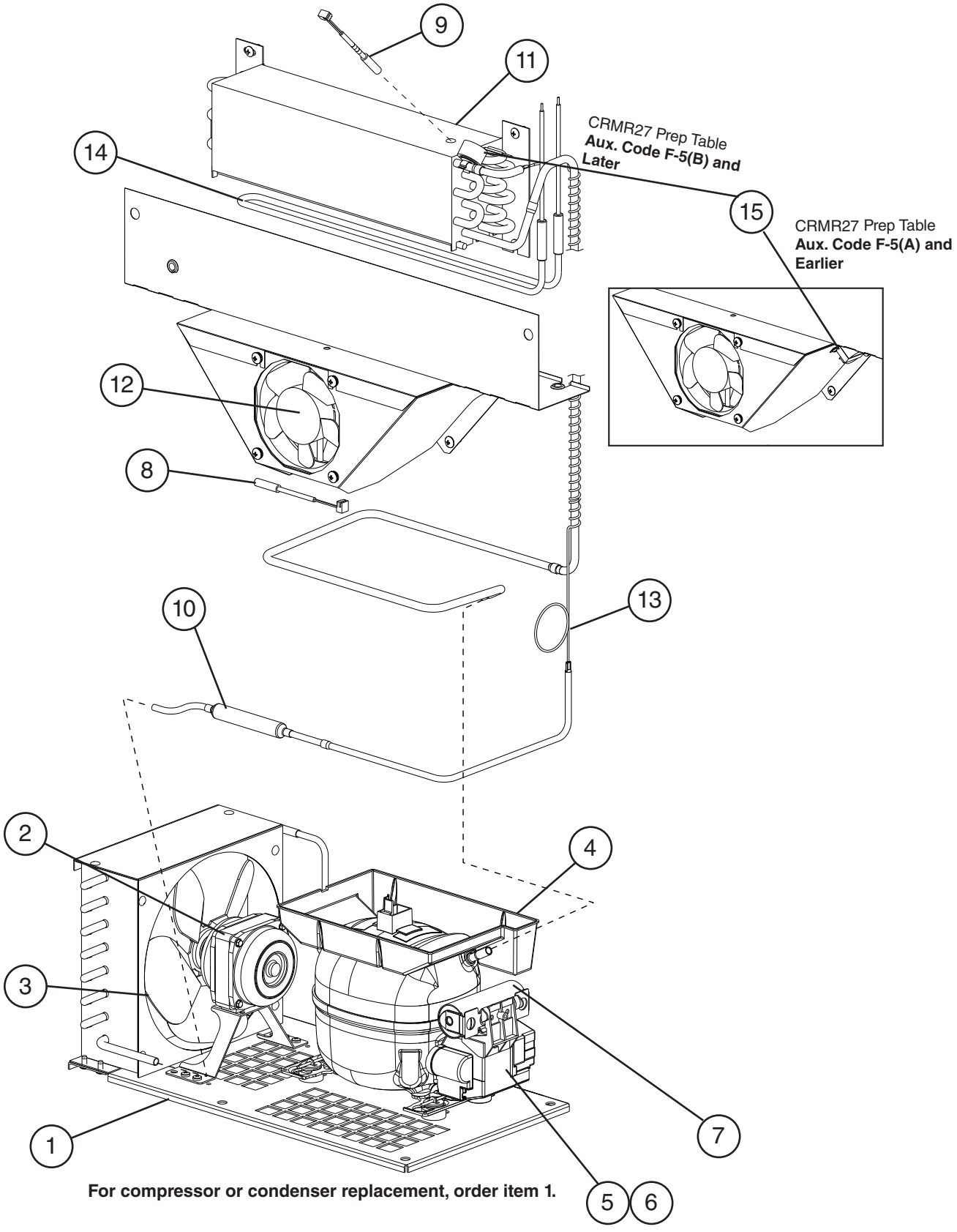

For compressor or condenser replacement, order item 1.

Title: B. Refrigeration Circuit Models: CRMR27 Undercounter, Worktop, Prep Table												
				Required Number								
Index No.	Description	Material or Model Number	Part Number	A-5 to D-6	D-8 to F-5 (A)	F-5 (B)	F-6	F-7 to H-5				
1	Condensing Unit (includes compressor, condenser, and items 2 through 7; compressor and condenser are not sold individually)	**UC/WT/ Prep Table**	3A8106-01	1	1	1	1	1				
2	Condenser Fan Motor		3A6798-01	1	1	1	1	1				
3	Condenser Fan Blade		3A6799-01	1	1	1	1	1				
4	Condensate Pan		3A6758-01	1	1	1	1	1				
5	Compressor External Protector		3A6746-01	1	1	1	1	1				
6	Start Relay	**UC/WT/ Prep Table**	1000000412	1	1	1	1	1				
7	Start Capacitor (C-6 and earlier models did not have start capacitor)	**UC/WT/Prep Table** 233-280MFD, 165VAC	1000000279	1	1	1	1	1				
8	Cabinet Thermistor	**UC/WT**	4A4864-01				1	1				
		Prep Tables						1				
9	Defrost Thermistor	**Prep Table**	4A4865-01					1				
10	Drier		4A5576-01	1	1	1	1	1				
11	Evaporator		2A8513-01	1	1	1	1	1				
12	Evaporator Fan Motor		4A5343-01	1	1	1	1	1				
13	Capillary Tube Replacement Kit	L=2438 mm	SP-5119	1	1	1	1	1				
14	Defrost Heater	**Prep Table**	3A6443-05		1	1	1	1				
15	Defrost Safety Thermostat	**Prep Table**	4A0954-02		1	-						
			4A5853-01			1	1	1				

B. Refrigeration Circuit

CRMF27 Undercounter and Worktop

A-5 to H-6

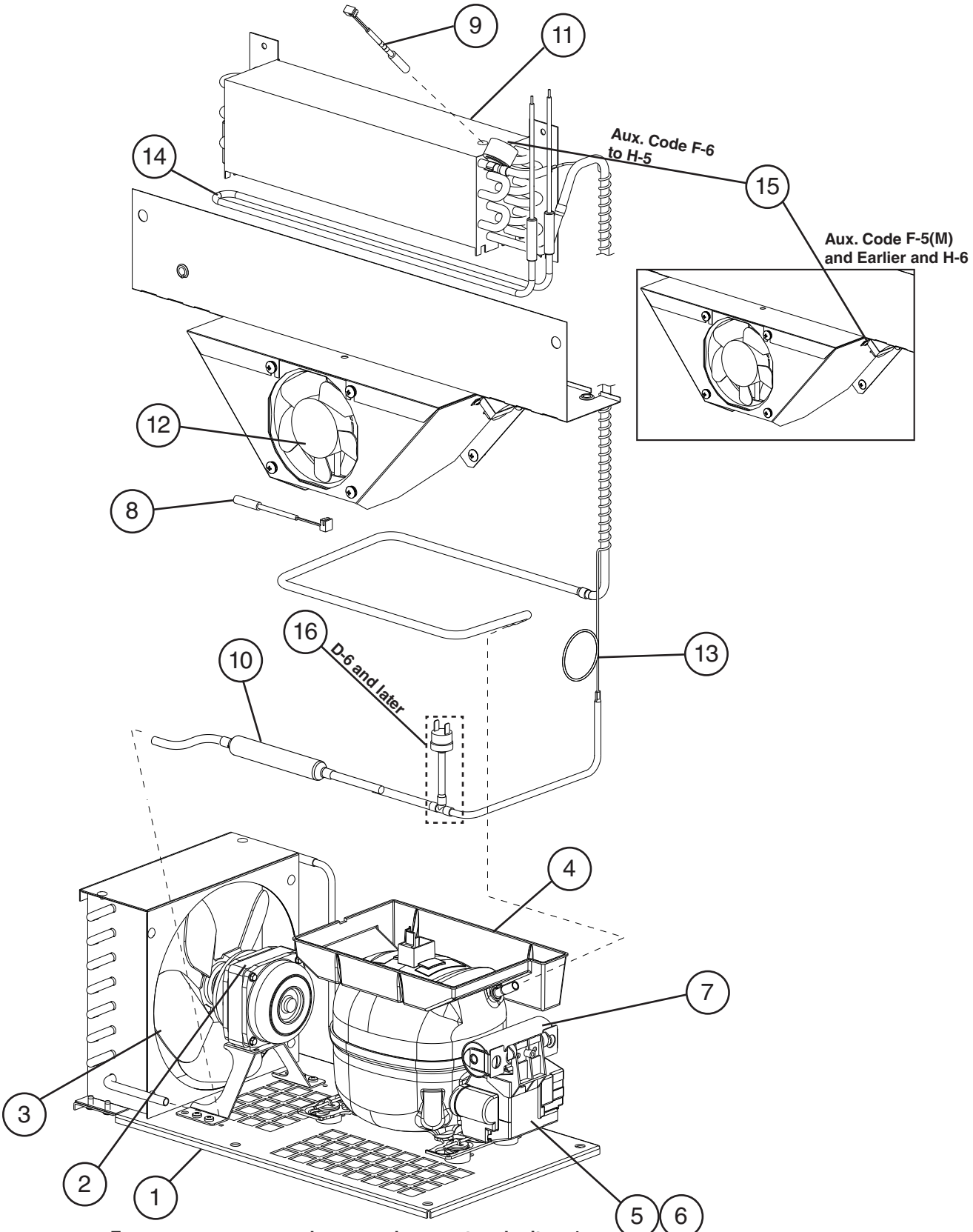

For compressor or condenser replacement, order item 1.

Title: B. Refrigeration Circuit Models: CRMF27 Undercounter and Worktop												
				Required Number								
Index No.	Description	Material or Model Number	Part Number	A-5 to D-5	D-6 to F-5 (E)	F-5 (F)	F-6	F-7 to G-5	G-6 H-5	H-6		
1	Condensing Unit (includes compressor, condenser, and items 2 through 7; compressor and condenser are not sold individually)		3A8107-01	1	1	1	1	1	1	1		
2	Condenser Fan Motor		3A6798-01	1	1	1	1	1	1	1		
3	Condenser Fan Blade		3A6799-01	1	1	1	1	1	1	1		
4	Condensate Pan		3A6758-01	1	1	1	1	1	1	1		
5	Compressor External Protector		3A6774-01	1	1	1	1	1	1	1		
6	Start Relay		3A7232-01	1	1	1	1	1	1	1		
7	Start Capacitor	270-327MFD, 165VAC	4A5525-01	1	1	1	1	1	1	1		
8	Cabinet Thermistor	**CRMF27-W(-LP)**	4A4864-01			1	1	1	1	1		
		All Freezers Except CRMF27-W(-LP)						1	1	1		
9	Defrost Thermistor	**CRMF27-W(-LP)**	4A4865-01			1	1	1	1	1		
		All Freezers Except CRMF27-W(-LP)						1	1	1		
10	Drier		4A5576-01	1	1	1	1	1	1	1		
11	Evaporator		2A8513-01	1	1	1	1	1	1	1		
12	Evaporator Fan Motor		4A5343-01	1	1	1	1	1	1	1		
13	Capillary Tube Replacement Kit	SP-5120	3A8129A01	1	1	1	1	1	1	1		
14	Defrost Heater		3A6443-05	1	1	1	1	1	1	1		
15	Defrost Safety Thermostat		4A0954-02	1	1	1	-			1		
			4A5853-01				1	1	1	-		
16	High-Pressure Switch		4A2516-01		1	1	1	1	1	1		

B. Refrigeration Circuit

CRMR36 Undercounter, Worktop, and Prep Table

F-5 to H-5

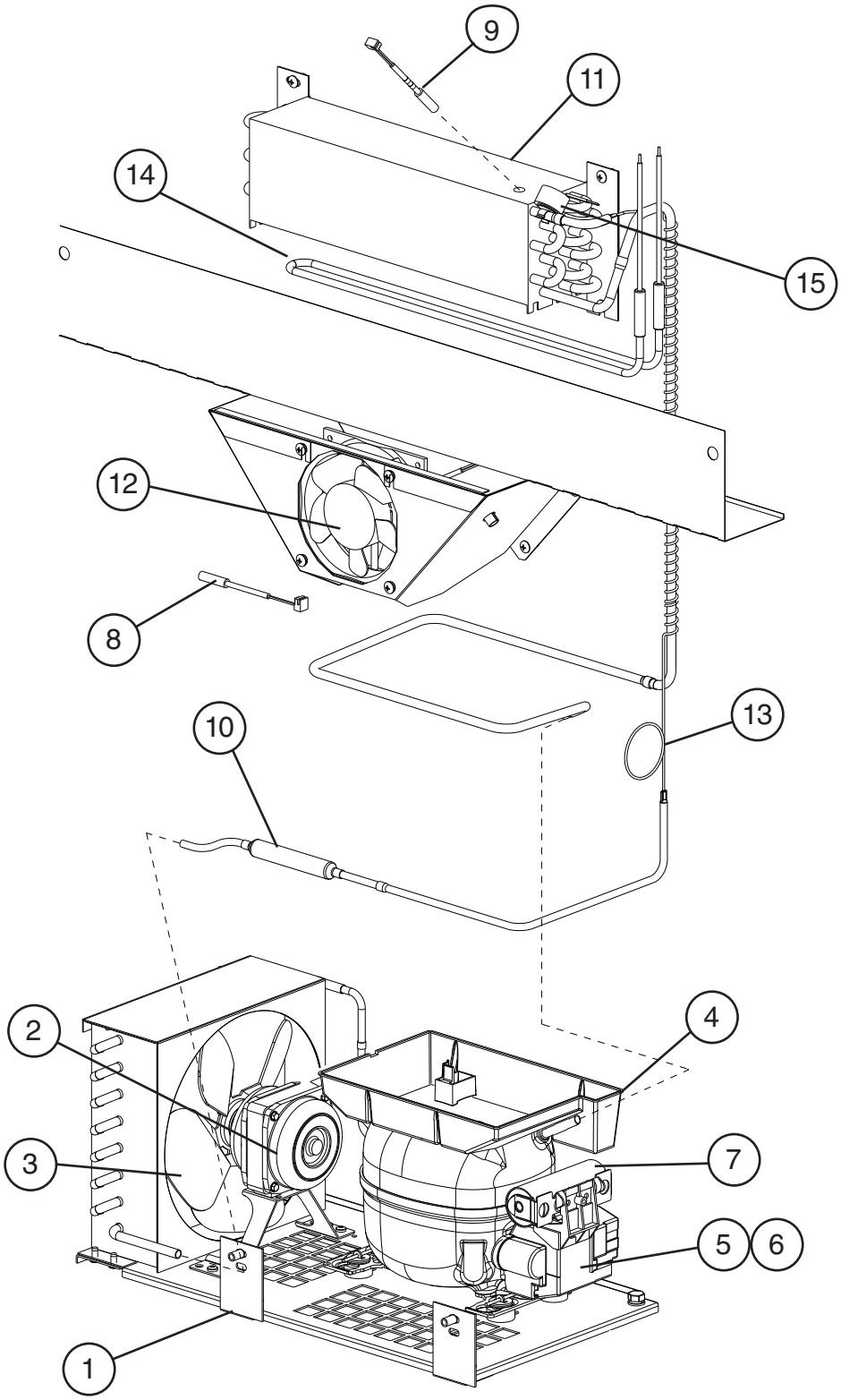

For compressor or condenser replacement, order item 1.

Title: B. Refrigeration Circuit Models: CRMR36 Undercounter, Worktop, Prep Table												
Index No.	Description	Material or Model Number	Part Number	Required Number								
				F-5 to G-5	G-6 H-5							
1	Condensing Unit (includes compressor, condenser, and items 2 through 7; compressor and condenser are not sold individually)		3A8106-01	1	1							
2	Condenser Fan Motor		3A6798-01	1	1							
3	Condenser Fan Blade		3A6799-01	1	1							
4	Condensate Pan		3A6758-01	1	1							
5	Compressor External Protector		3A6746-01	1	1							
6	Start Relay		1000000412	1	1							
7	Start Capacitor	233-280MFD, 165VAC	1000000279	1	1							
8	Cabinet Thermistor		4A4864-01	1	1							
9	Defrost Thermistor	**Prep Table**	4A4865-01	1	1							
10	Drier		4A5576-01	1	1							
11	Evaporator		2A8513-01	1	1							
12	Evaporator Fan Motor		4A5343-01	1	1							
13	Capillary Tube (includes: capillary tube, drier, cover, insulation)	SP-5119	3A8129A01	1	1							
14	Defrost Heater	**Prep Table**	3A6443-05	1	1							
15	Defrost Safety Thermostat (thermodisc)	**Prep Table**	4A5853-01	1	1							

B. Refrigeration Circuit

CRMR48 Undercounter, Worktop, and Prep Table

A-5 to H-5

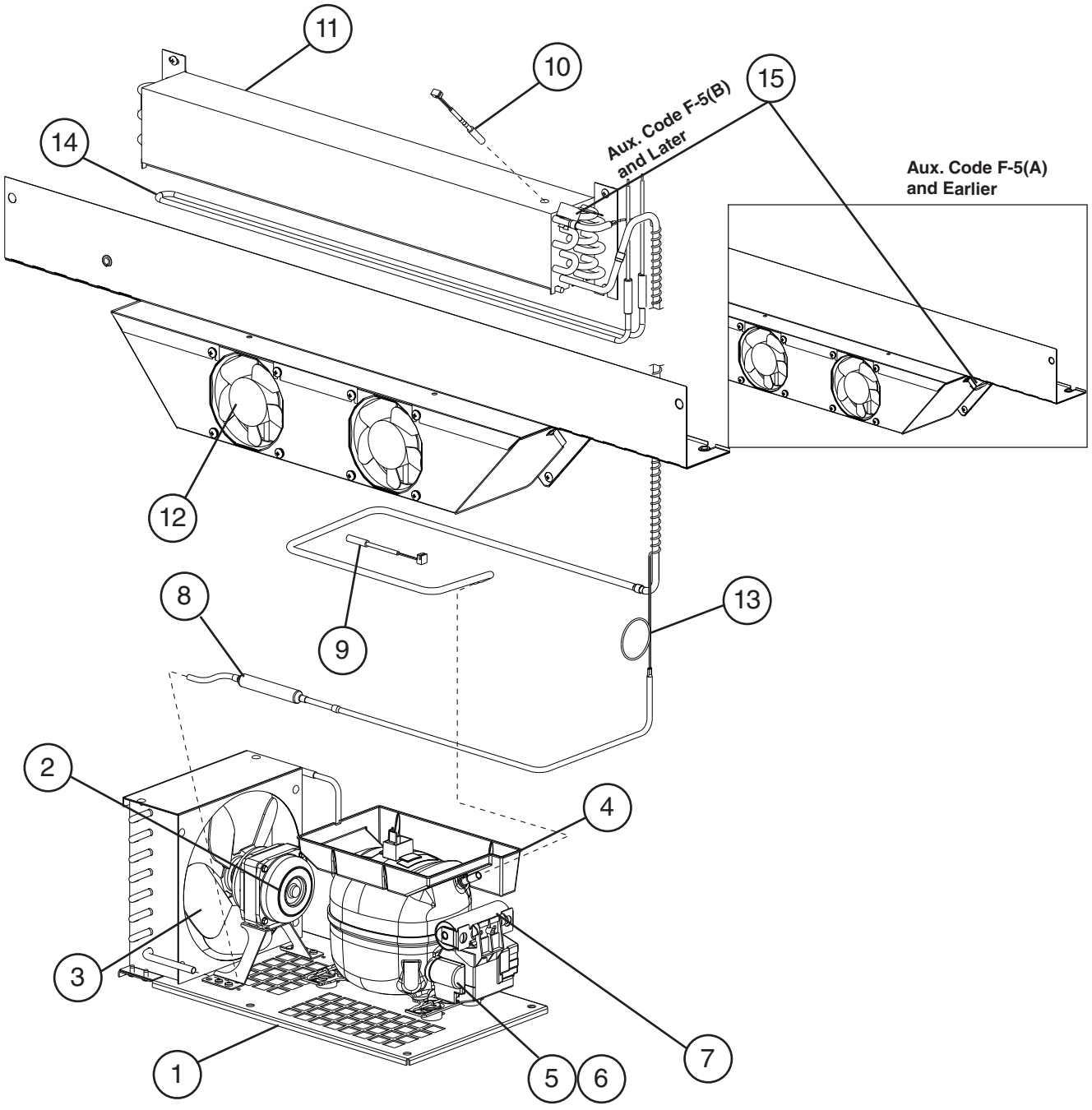

For compressor or condenser replacement, order item 1.

Title: B. Refrigeration Circuit	Models: CRMR48 Undercounter, Worktop, and Prep Table											
				Required Number								
Index No.	Description	Material or Model Number	Part Number	A-5 to C-6	C-7 to F-5 (A)	F-5 (B) to F-6 (G)	F-6 (H)	F-7 to G-5	G-6 H-5			
1	Condensing Unit (includes compressor, condenser, and items 2 through 8; compressor and condenser are not sold individually)	**UC/WT/ Prep Table**	3A8106-01	1	1	1	1	1	1			
2	Condenser Fan Motor		3A6798-01	1	1	1	1	1	1			
3	Condenser Fan Blade		3A6799-01	1	1	1	1	1	1			
4	Condensate Pan		3A6758-01	1	1	1	1	1	1			
5	Compressor External Protector		3A6746-01	1	1	1	1	1	1			
6	Start Relay	**UC/WT/ Prep Table**	1000000412	1	1	1	1	1	1			
7	Start Capacitor (C-6 and earlier models did not have start capacitor)	**UC/WT/ Prep Table** 233-280MFD, 165VAC	1000000279	1	1	1	1	1	1			
8	Drier		4A5576-01	1	1	1	1	1	1			
9	Cabinet Thermistor	**CRMR48(-W)**	4A4864-01				1	1	1			
		All UC/WT Refrigerators Except CRMR48(-W)						1	1			
		Prep Table						1	1			
10	Defrost Thermistor	**Prep Table**	4A4865-01					1	1			
11	Evaporator		2A8513-02	1	1	1	1	1	1			
12	Evaporator Fan Motor		4A5343-01	2	2	2	2	2	2			
13	Capillary Tube Replacement Kit		SP-5119	1	1	1	1	1	1			
14	Defrost Heater	**Prep Table**	3A6443-04		1	1	1	1	1			
15	Defrost Safety Thermostat	**Prep Table**	4A0954-02		1	-						
			4A5853-01			1	1	1	1			

B. Refrigeration Circuit

CRMF48 Undercounter and Worktop

A-5 to H-5

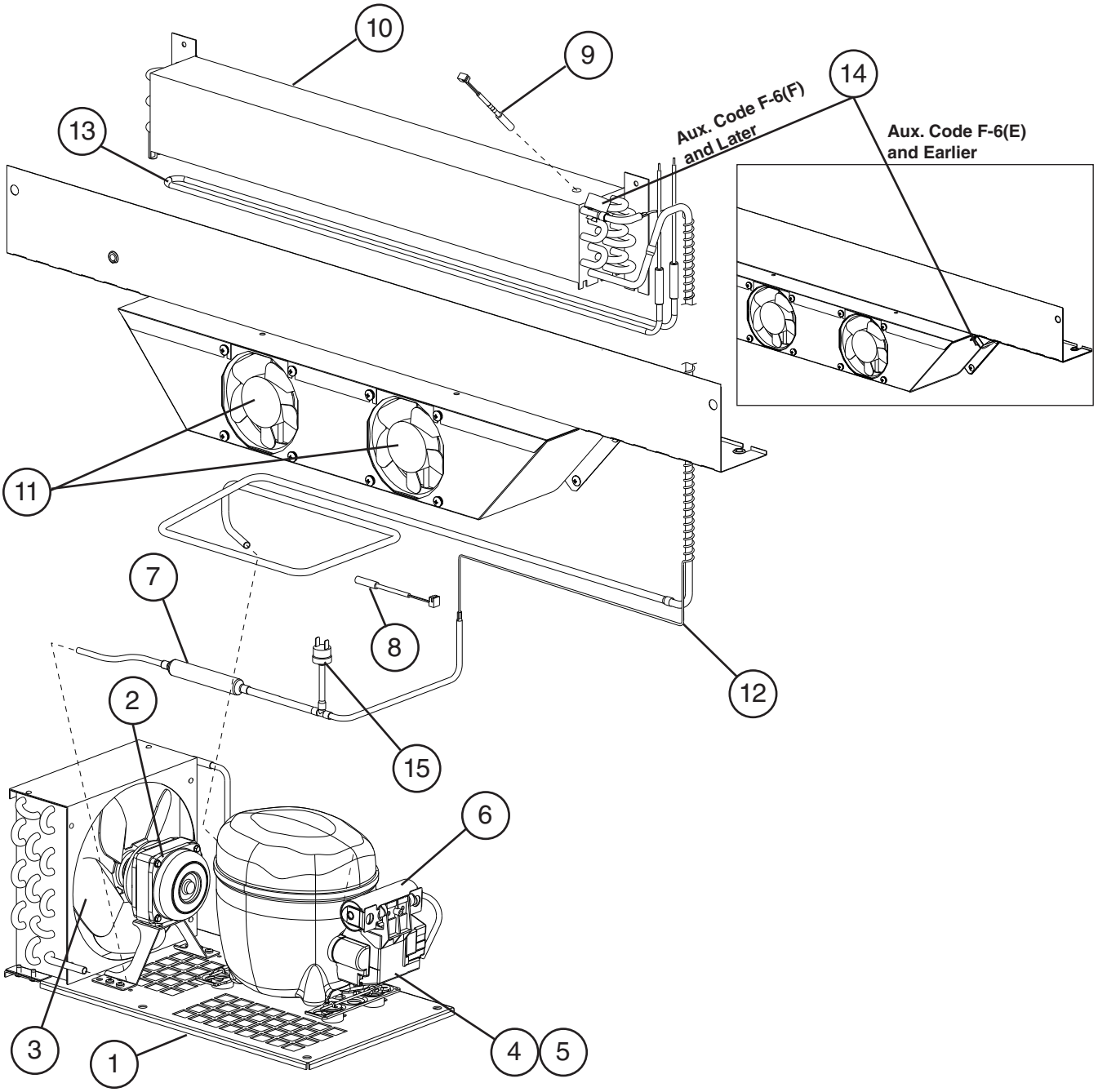

For compressor or condenser replacement, order item 1.

Title: B. Refrigeration Circuit Models: CRMF48 Undercounter and Worktop												
				Required Number								
Index No.	Description	Material or Model Number	Part Number	A-5 to F-6 (E)	F-6 (F)	F-7	G-5	G-6 H-5				
1	Condensing Unit (includes compressor, condenser, and items 2 through 6; compressor and condenser are not sold individually)		3A8108-01	1	1	1	1	1				
2	Condenser Fan Motor		3A6798-01	1	1	1	1	1				
3	Condenser Fan Blade		3A6799-01	1	1	1	1	1				
4	Compressor External Protector		3A6936-01	1	1	1	1	1				
5	Start Relay		3A6937-01	1	1	1	1	1				
6	Start Capacitor	378-454MFD, 115VAC	3A6938-01	1	1	1	1	1				
7	Drier		4A5576-01	1	1	1	1	1				
8	Cabinet Thermistor	**CRMF48(-W)**	4A4864-01		1	1	1	1				
		All Freezers Except CRMF48(-W)				1	1	1				
9	Defrost Thermistor	**CRMF48(-W)**	4A4865-01		1	1	1	1				
		All Freezers Except CRMF48(-W)				1	1	1				
10	Evaporator		2A8513-02	1	1	1	1	1				
11	Evaporator Fan Motor		4A5471-01	2	2	2	-					
			4A5343-01				2	2				
12	Capillary Tube Replacement Kit		SP-5121	1	1	1	1	1				
13	Defrost Heater		3A6443-04	1	1	1	1	1				
14	Defrost Safety Thermostat		4A0954-02	1	-							
			4A5853-01		1	1	1	1				
15	High-Pressure Switch		4A2516-02	1	1	1	1	1				

B. Refrigeration Circuit

CRMR60 Undercounter, Worktop, and Prep Table

B-5 to H-5

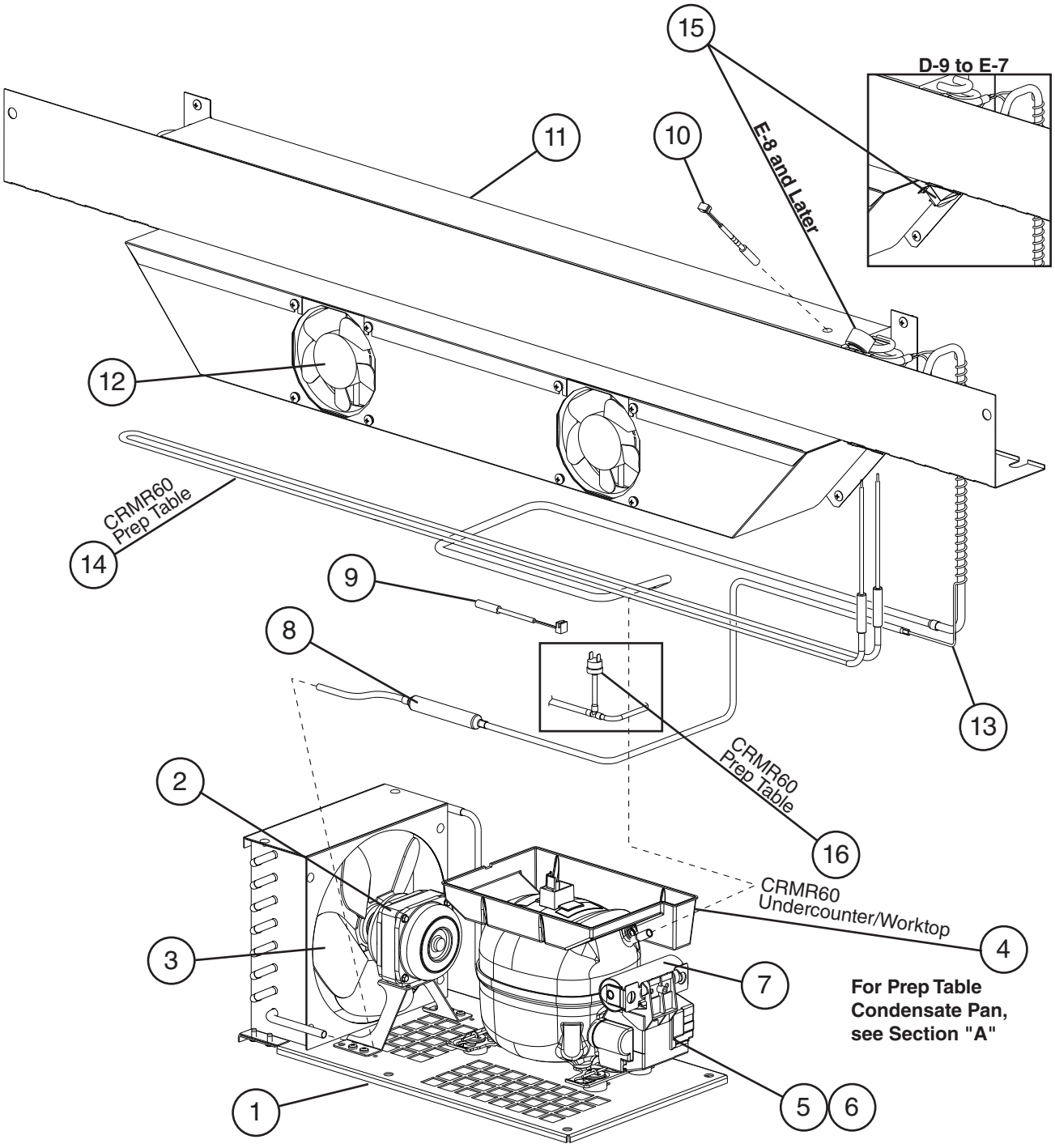

For compressor or condenser replacement, order item 1.

Title: B. Refrigeration Circuit Models: CRMR60 Undercounter, Worktop, and Prep Table												
				Required Number								
Index No.	Description	Material or Model Number	Part Number	B-5 to D-6	D-8 to E-7	E-8 to F-5	F-6	F-7 to G-5	G-6 H-5			
1	Condensing Unit (includes compressor, condenser, and items 2 through 7; compressor and condenser are not sold individually)	**UC/WT**	3A8107-01	1	1	1	1	1	1			
		Prep Table	3A8108-01	1	1	1	1	1	1			
2	Condenser Fan Motor		3A6798-01	1	1	1	1	1	1			
3	Condenser Fan Blade		3A6799-01	1	1	1	1	1	1			
4	Condensate Pan	**UC/WT**	3A6758-01	1	1	1	1	1	1			
5	Compressor External Protector	**UC/WT**	3A6774-01	1	1	1	1	1	1			
		Prep Table	3A6936-01	1	1	1	1	1	1			
6	Start Relay	**UC/WT**	3A7232-01	1	1	1	1	1	1			
		Prep Table	3A6937-01	1	1	1	1	1	1			
7	Start Capacitor	**UC/WT** 270-327MFD, 165VAC	4A5525-01	1	1	1	1	1	1			
		Prep Table 378-454MFD, 115VAC	3A6938-01	1	1	1	1	1	1			
8	Drier		4A5576-01	1	1	1	1	1	1			
9	Cabinet Thermistor	**UC/WT**	4A4864-02				1	1	1			
		Prep Table						1	1			
10	Defrost Thermistor	**Prep Table**	4A4865-02					1	1			
11	Evaporator		2A8513-03	1	1	1	1	1	1			
12	Evaporator Fan Motor		4A5343-01	2	2	2	2	2	2			
13	Capillary Tube Replacement Kit	**UC/WT**	SP-5120	1	1	1	1	1	1			
		Prep Table	SP-5227	1	1	1	1	1	1			
14	Defrost Heater	**Prep Table**	3A6443-06		1	1	1	1	1			
15	Defrost Thermostat	**Prep Table**	4A0954-02		1	-						
			4A5853-01			1	1	1	1			
16	High-Pressure Switch	**Prep Table**	4A2516-01	1	1	1	1	1	1			

B. Refrigeration Circuit

CRMF60 Undercounter and Worktop

C-5 to H-5

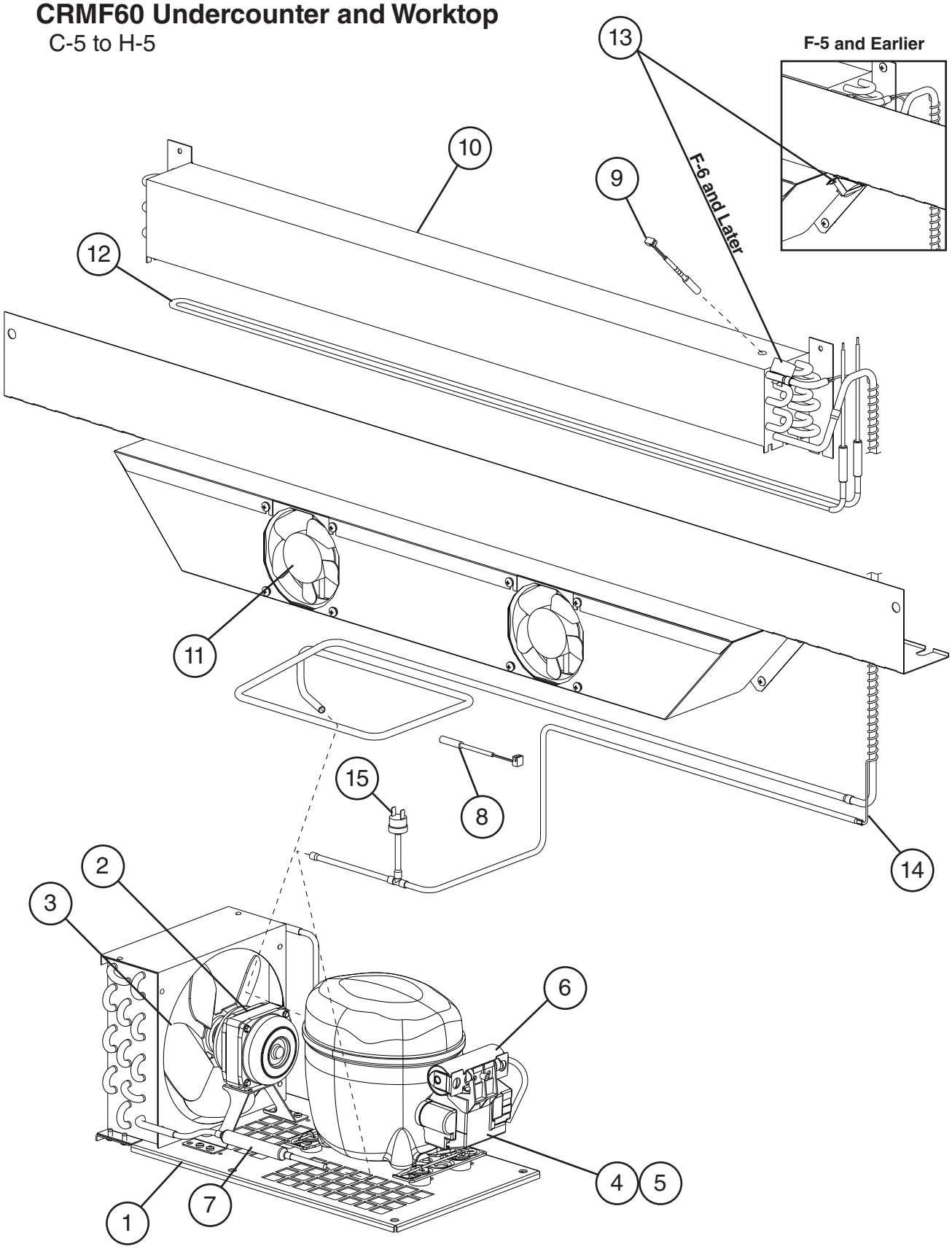

For compressor or condenser replacement, order item 1.

Title: B. Refrigeration Circuit Models: CRMF60 Undercounter and Worktop												
Index No.	Description	Material or Model Number	Part Number	Required Number								
				C-5 to D-6	D-8 to F-5	F-6	G-5	G-6 H-5				
1	Condensing Unit (includes compressor, condenser, and items 2 through 7; compressor and condenser are not sold individually)		3A8108-01	1	1	1	1	1				
2	Condenser Fan Motor		3A6798-01	1	1	1	1	1				
3	Condenser Fan Blade		3A6799-01	1	1	1	1	1				
4	Compressor External Protector		3A6936-01	1	1	1	1	1				
5	Start Relay		3A6937-01	1	1	1	1	1				
6	Start Capacitor	378-454MFD, 115VAC	3A6938-01	1	1	1	1	1				
7	Drier		4A5576-01	1	1	1	1	1				
8	Cabinet Thermistor		4A4864-02			1	1	1				
9	Defrost Thermistor		4A4865-02			1	1	1				
10	Evaporator		2A8513-03	1	1	1	1	1				
11	Evaporator Fan Motor		4A5471-01	2	2	2	-	-				
			4A5343-01				2	2				
12	Defrost Heater		3A6443-06	1	1	1	1	1				
13	Defrost Thermostat		4A0954-02	1	1	-						
			4A5853-01			1	1	1				
14	Capillary Tube Replacement Kit		SP-5121	1	1	1	1	1				
15	High-Pressure Switch		4A2516-01	1	1	1	1	1				

B. Refrigeration Circuit

CRMR72 Undercounter, Worktop, Prep Table

B-5 to H-5

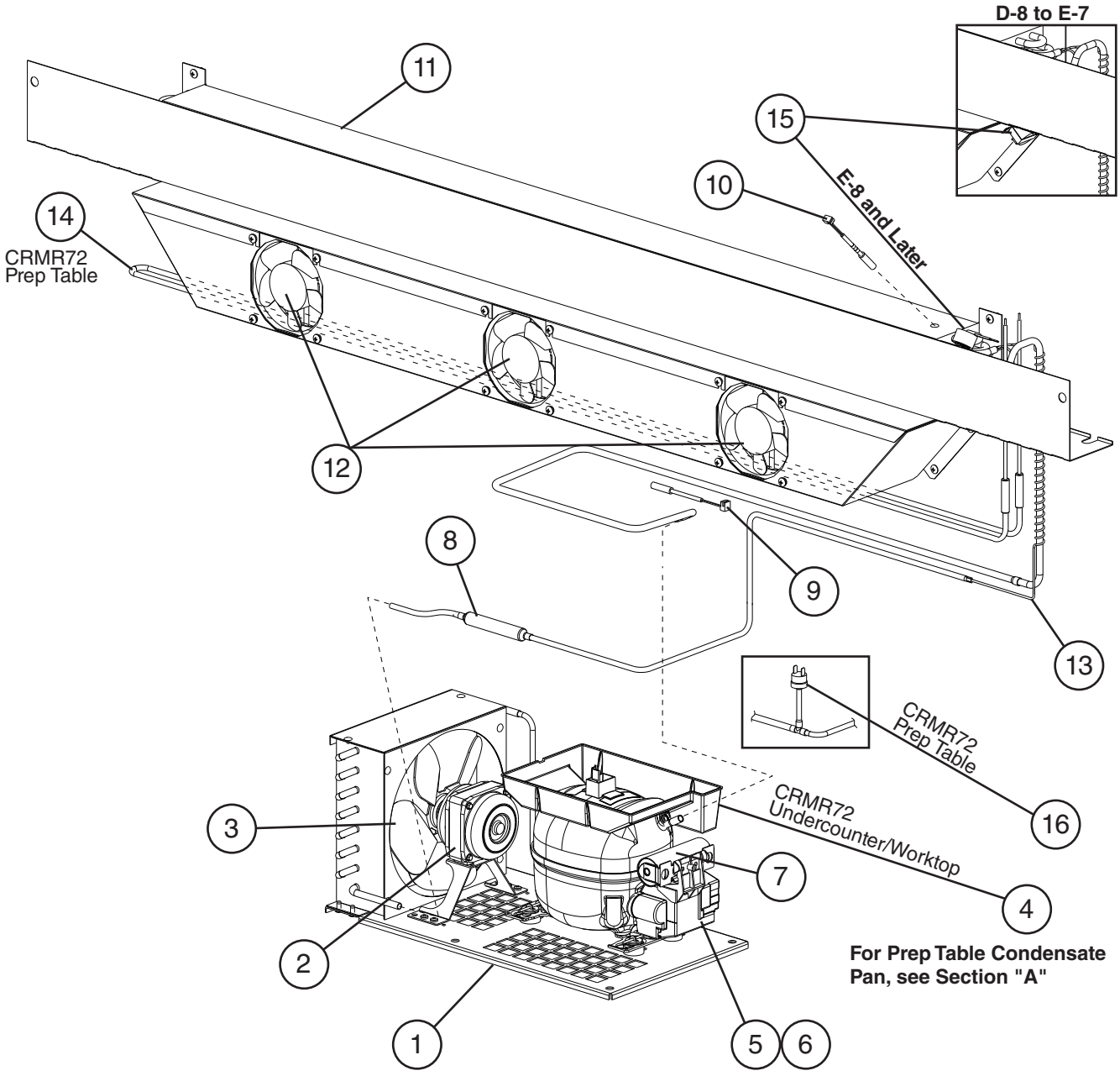

For Prep Table Condensate Pan, see Section "A"

For compressor or condenser replacement, order item 1.

Title: B. Refrigeration Circuit Models: CRMR72 Undercounter, Worktop, and Prep Table												
				Required Number								
Index No.	Description	Material or Model Number	Part Number	B-5 to D-7	D-8 to E-7	E-8 to F-5 (H)	F-5 (J) to F-6	F-7 to G-5	G-6 H-5			
1	Condensing Unit (includes compressor, condenser, and items 2 through 7; compressor and condenser are not sold individually)	**UC/WT**	3A8107-01	1	1	1	1	1	1			
		Prep Table	3A8108-01	1	1	1	1	1	1			
2	Condenser Fan Motor		3A6798-01	1	1	1	1	1	1			
3	Condenser Fan Blade		3A6799-01	1	1	1	1	1	1			
4	Condensate Pan	**UC/WT**	3A6758-01	1	1	1	1	1	1			
5	Compressor External Protector	**UC/WT**	3A6774-01	1	1	1	1	1	1			
		Prep Table	3A6936-01	1	1	1	1	1	1			
6	Start Relay	**UC/WT**	3A7232-01	1	1	1	1	1	1			
		Prep Table	3A6937-01	1	1	1	1	1	1			
7	Start Capacitor	**UC/WT** 270-327MFD, 165VAC	4A5525-01	1	1	1	1	1	1			
		Prep Table 378-454MFD, 115VAC	3A6938-01	1	1	1	1	1	1			
8	Drier		4A5576-01	1	1	1	1	1	1			
9	Cabinet Thermistor	**UC/WT**	4A4864-02				1	1	1			
		Prep Table						1	1			
10	Defrost Thermister	**Prep Table**	4A4865-02					1	1			
11	Evaporator		2A8513-04	1	1	1	1	1	1			
12	Evaporator Fan Motor		4A5343-01	3	3	3	3	3	3			
13	Capillary Tube Replacement Kit	**UC/WT**	SP-5120	1	1	1	1	1	1			
		Prep Table	SP-5227	1	1	1	1	1	1			
14	Defrost Heater	**Prep Table**	3A6443-07		1	1	1	1	1			
15	Defrost Safety Thermostat	**Prep Table**	4A0954-02		1	-						
			4A5853-01			1	1	1	1			
16	High-Pressure Switch	**Prep Table**	4A2516-01	1	1	1	1	1	1			

C. Door-Right Hinged
Undercounter, Worktop, Prep Table
A-5 to H-5

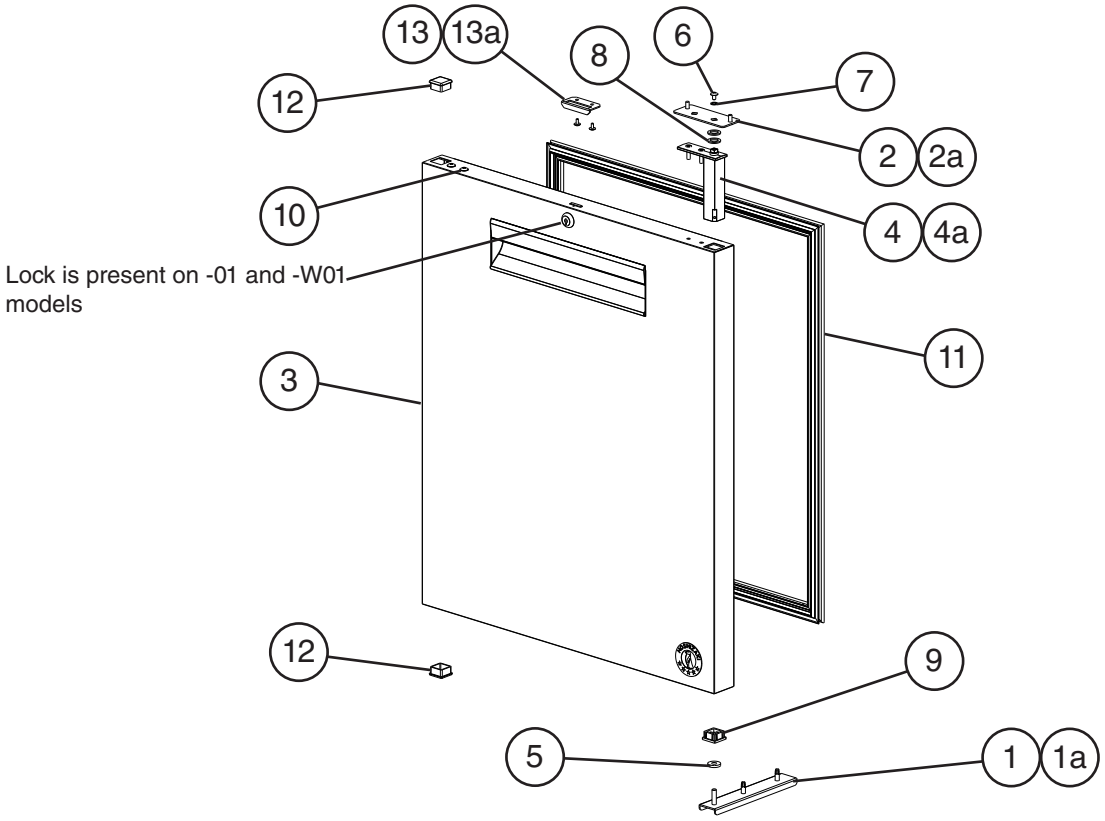

Title: C. Door-Right Hinged Models: Undercounter, Worktop, Prep Table												
				Required Number								
Index No.	Description	Material or Model Number	Part Number	A-5 to D-6 (D)	D-6 (E) to G-5	G-6 H-5						
1	Lower Hinge Bracket		3A6681G01	1	1	1						
1a	Hex Head Tapping Bolt	1/4-20×3/4	4A5213-01	2	2	2						
2	Upper Hinge Bracket		3A6810-01	1	1	1						
2a	Truss Head Screw	5×12, SS	7C32-0512	2	2	2						

Title: C. Door-Right Hinged Models: Undercounter, Worktop, Prep Table												
				Required Number								
Index No.	Description	Material or Model Number	Part Number	A-5 to D-6 (D)	D-6 (E) to G-5	G-6 H-5						
3	Door Assembly without Locks (includes items 4 through 12)	**CRM_27 UC/WT/Prep Table (All except -01 and -W01)**	2A7322G01	1	1	1						
		CRMR36 UC/WT/Prep Table (All except -01 and -W01)	2A7328G01	1	1	1						
		CRM_48 and CRMR72 UC/WT/Prep Table (All except -01 and -W01)	2A7324G01	1	1	1						
		CRMR60 UC/WT/Prep Table (All except -01 and -W01)	2A7328G01	1	1	1						
	Door Assembly with Locks (includes items 4 through 12)	**CRM_R27-01(-W01) UC/WT/Prep Table**	2A7323G01	1	1	1						
		CRM_48-01(-W01) and CRMR72-01(-W01) UC/WT/Prep Table	2A7327G01	1	1	1						
4	Hinge Spring Cartridge (includes items 5 through 9)		3A9206-01	1	1	1						
4a	Countersunk Screw	5×20, SS	7C42-0520	2	2	2						
5	Thrust Washer		4A5234-01	1	1	1						
6	Screw		4A5230-01	1	1	1						
7	Lockwasher		4A5231-01	1	1	1						
8	Thrust Washer		4A5233-01	2	2	2						
9	Bearing		4A5232-01	1	1	1						
10	Truss Head Screw (filler screws)	5×10, SS	7C32-0510	2	2	2						

Title: C. Door-Right Hinged Models: Undercounter, Worktop, Prep Table												
				Required Number								
Index No.	Description	Material or Model Number	Part Number	A-5 to D-6 (D)	D-6 (E) to G-5	G-6 H-5						
11	Gasket	**CRM_27 UC/WT/Prep Table**	2A5192-05	1	-							
			2A6996-05		1	1						
		CRMR36 UC/WT/Prep Table	2A6996-09	1	1	1						
		CRM_48 and CRMR72 UC/WT/Prep Table	2A5192-06	1	-							
			2A6996-06		1	1						
		CRM_60 UC/WT/Prep Table	2A5192-09	1	-							
			2A6996-09		1	1						
12	End Cap		4A5432-01	2	2	2						
13	Strike Plate for Doors with Locks	**-01(-W01) UC/WT/Prep Table**	4A5493-01	1	1	1						
13a	T2 Screw	**-01(-W01) UC/WT/Prep Table** 4×8, SS	7P32-0408	2	2	2						

D. Door-Left Hinged
Undercounter, Worktop, Prep Table
A-5 to H-5

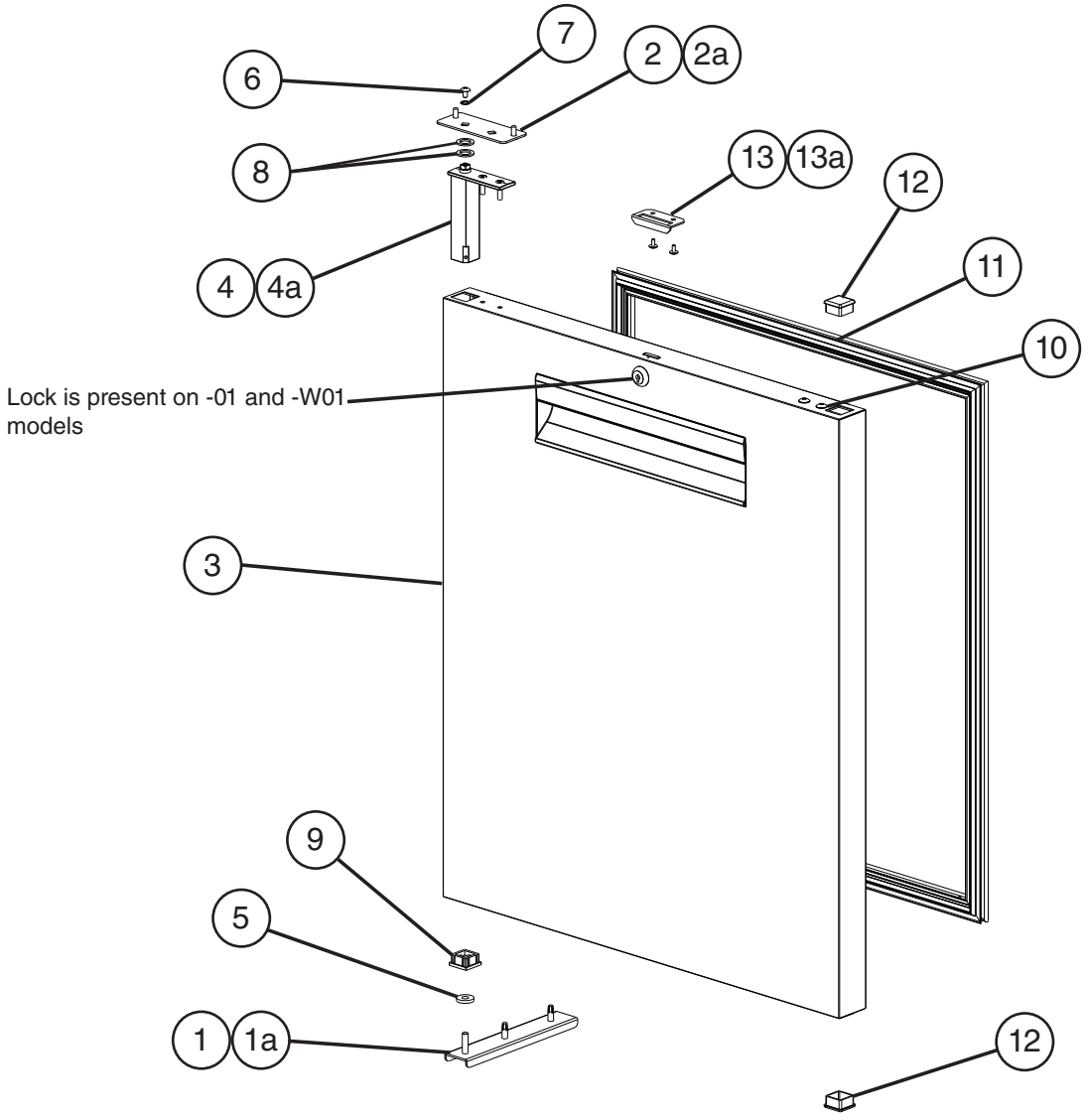

Title: D. Door-Left Hinged Models: Undercounter, Worktop, Prep Table												
				Required Number								
Index No.	Description	Material or Model Number	Part Number	A-5 to D-6 (D)	D-6 (E) to G-5	G-6 H-5						
1	Lower Hinge Bracket		3A6681G01	1	1	1						
1a	Hex Head Tapping Bolt	1/4-20×3/4	4A5213-01	2	2	2						
2	Upper Hinge Bracket		3A6810-01	1	1	1						
2a	Truss Head Screw	5×12, SS	7C32-0512	2	2	2						
3	Door Assembly without Locks (includes items 4 through 12)	**CRM_48 and CRMR72 UC/WT/Prep Table (All except -01 and -W01)**	2A7325G01	1	1	1						
		CRMR60 UC/WT/Prep Table (All except -01 and -W01)	2A7329G01	1	1	1						
	Door Assembly with Locks (includes items 4 through 12)	**CRM_48-01(-W01) and CRMR72-01(-W01) UC/WT/Prep Table**	2A7326G01	1	1	1						
4	Hinge Spring Cartridge (includes items 5 through 9)		3A9206-01	1	1	1						
4a	Countersunk Screw	5×20, SS	7C42-0520	2	2	2						
5	Thrust Washer		4A5234-01	1	1	1						
6	Screw		4A5230-01	1	1	1						
7	Lockwasher		4A5231-01	1	1	1						
8	Thrust Washer		4A5233-01	2	2	2						
9	Bearing		4A5232-01	1	1	1						
10	Truss Head Screw (filler screws)	5×10, SS	7C32-0510	2	2	2						
11	Gasket	**CRM_48 and CRMR72 UC/WT/Prep Table**	2A5192-06	1	-							
			2A6996-06		1	1						
		CRM_60 UC/WT/Prep Table	2A5192-09	1	-							
			2A6996-09		1	1						
12	End Cap		4A5432-01	2	2	2						
13	Strike Plate for Doors with Locks	**-01(-W01) UC/WT/Prep Table**	4A5493-01	1	1	1						
13a	T2 Screw	**-01(-W01) UC/WT/Prep Table** 4×8, SS	7P32-0408	2	2	2						

E. Door-Right Glass Door Hinged
Undercounter, Worktop, Prep Table

G-5

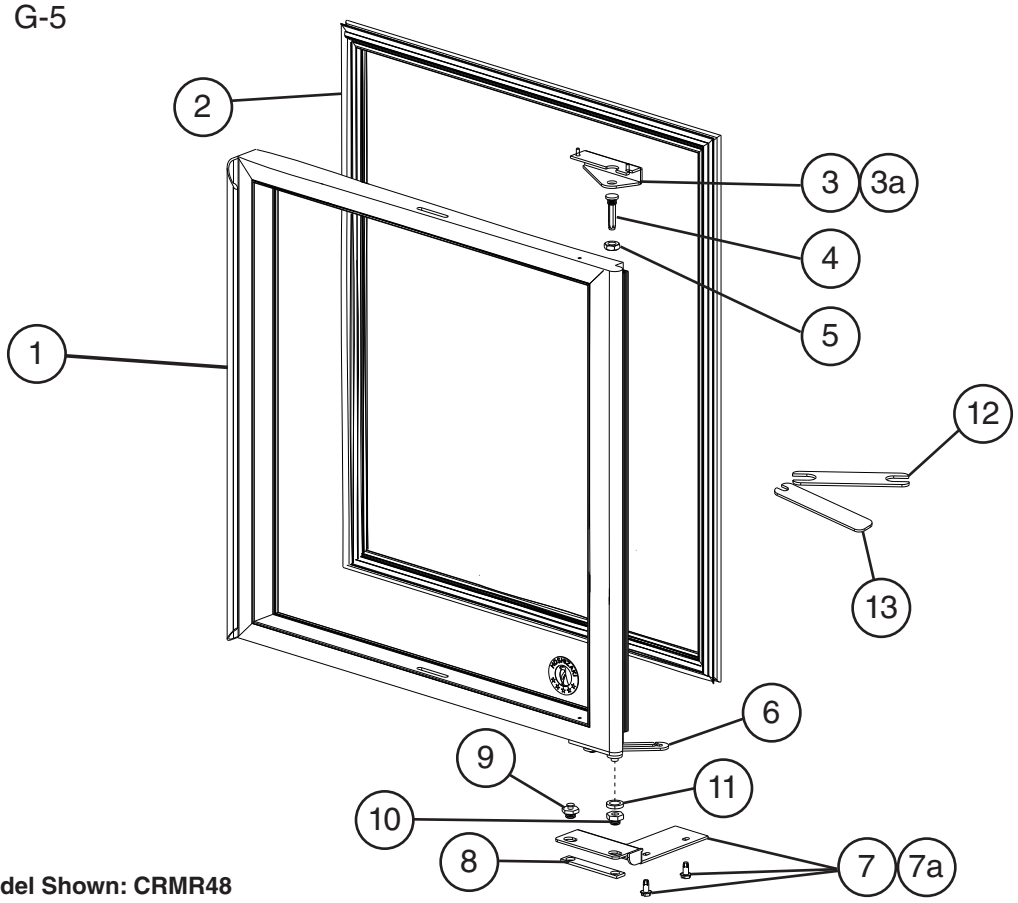

Model Shown: CRMR48

Title: E. Door-Right Glass Door Hinged Models: Undercounter, Worktop, Prep Table													
Index No.	Description	Material or Model Number	Part Number	Required Number									
				G-5									
1	Door (includes gasket and hinge arm)	**CRMR27-GLP01**	2A8359-03	1									
		CRMR48-GLP01 Right Side Hinged Door	2A8374-03	1									
2	Gasket	**CRMR27-GLP01**	4A6079-01	1									
		CRMR48-GLP01	4A6079-02	1									
3	Upper Hinge		3A9346-02	1									
3a	Truss Head Screw	5×12, SS	7C32-0512	2									
4	Hinge Pin		3A7946-04	1									
5	Hinge Pin Locknut		3A7946-05	1									
6	Hinge Arm		3A7946-01	1									
7	Lower Hinge		3A9342-01	1									
7a	Hex Head Tapping Bolt	1/4-20×3/4	4A5213-01	2									
8	Backer Plate		3A7946-08	1									
9	Slide Pin		3A7946-11	1									
10	Hinge Bushing		3A7946-09	1									
11	Nylon Washer		3A7946-10	1									
12	Wrench A		3A8298-01	1									
13	Wrench B		3A8299-01	1									

F. Door-Left Glass Door Hinged
Undercounter, Worktop, Prep Table

G-5

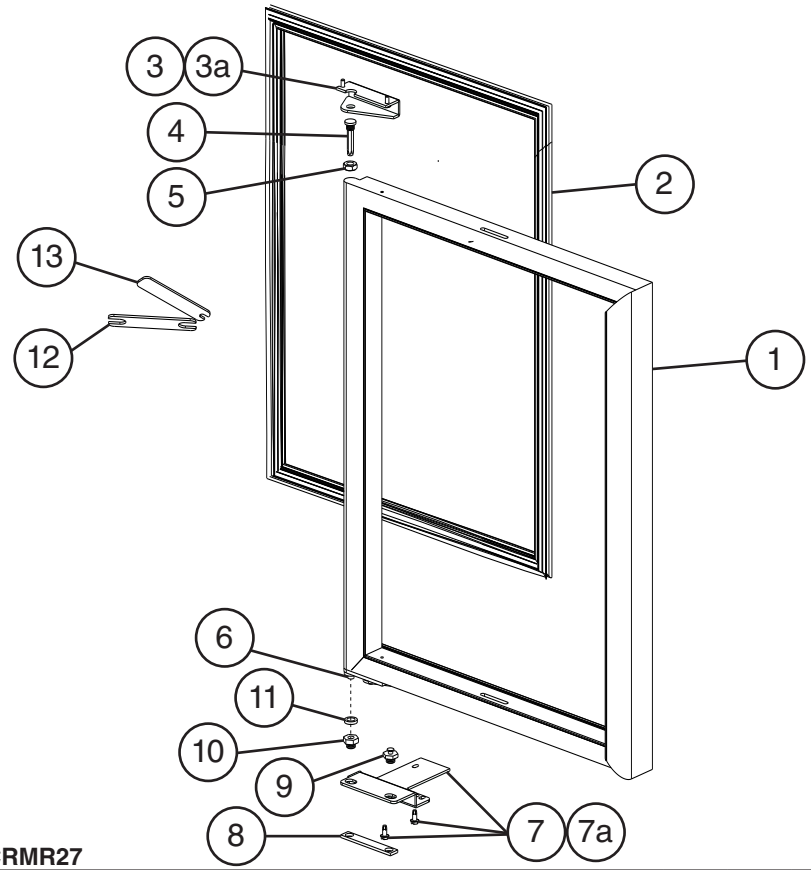

Model Shown: CRMR27

Title: F. Door-Left Glass Door Hinged Models: Undercounter, Worktop, Prep Table												
Index No.	Description	Material or Model Number	Part Number	Required Number								
				G-5								
1	Door (includes gasket and hinge arm)	**CRMR48-GLP01 Left Side Hinged Door**	2A8374-01	1								
2	Gasket	**CRMR48-GLP01**	4A6079-02	1								
3	Upper Hinge		3A9346-01	1								
3a	Truss Head Screw	5×12, SS	7C32-0512	2								
4	Hinge Pin		3A7946-04	1								
5	Hinge Pin Locknut		3A7946-05	1								
6	Hinge Arm		3A7946-01	1								
7	Lower Hinge		3A9342-02	1								
7a	Hex Head Tapping Bolt	1/4-20×3/4	4A5213-01	2								
8	Backer Plate		3A7946-08	1								
9	Slide Pin		3A7946-11	1								
10	Hinge Bushing		3A7946-09	1								
11	Nylon Washer		3A7946-10	1								
12	Wrench A		3A8298-01	1								
13	Wrench B		3A8299-01	1								

G. Drawer

Undercounter, Worktop, Prep Table (-D)(-D2)(-D4)(-D6)

A-5 to H-5

D-6 (J) and Earlier

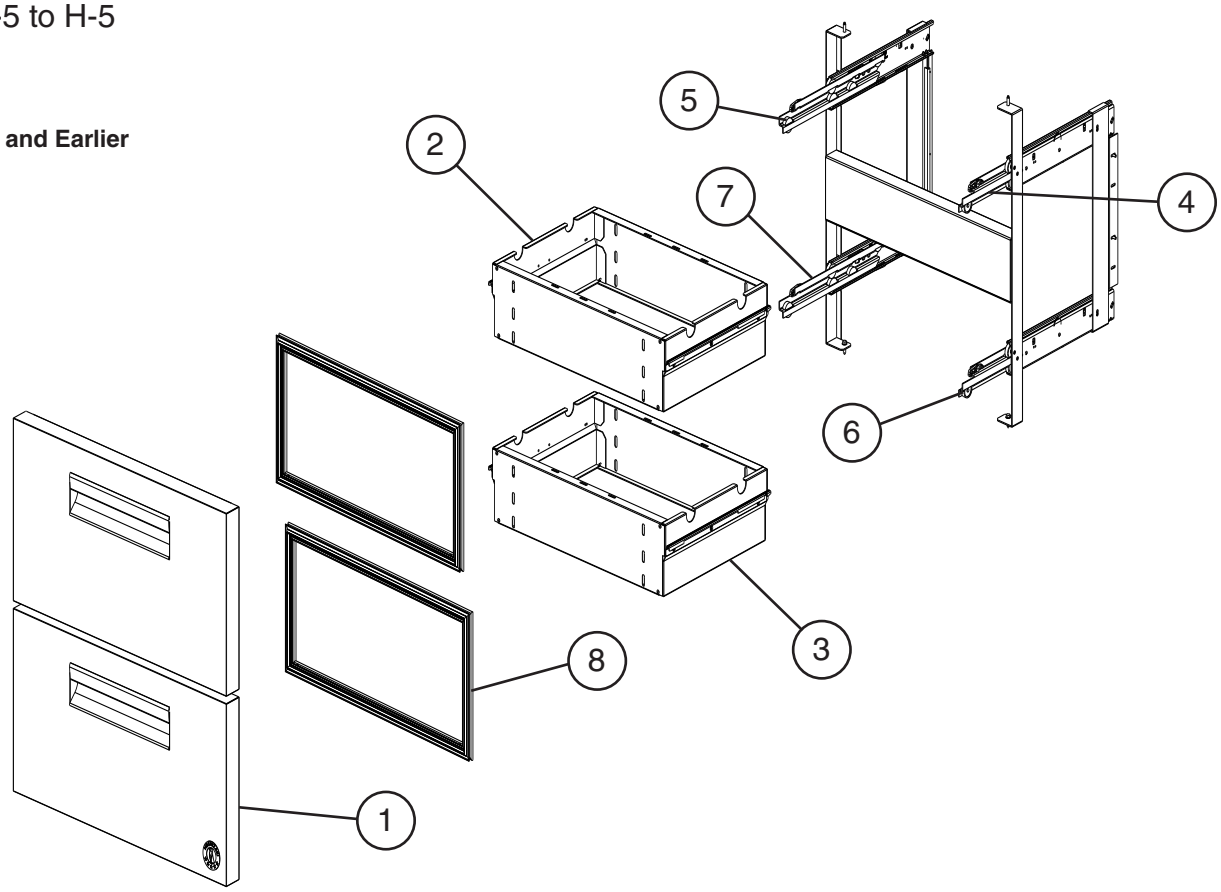

D-6 (K) and Later

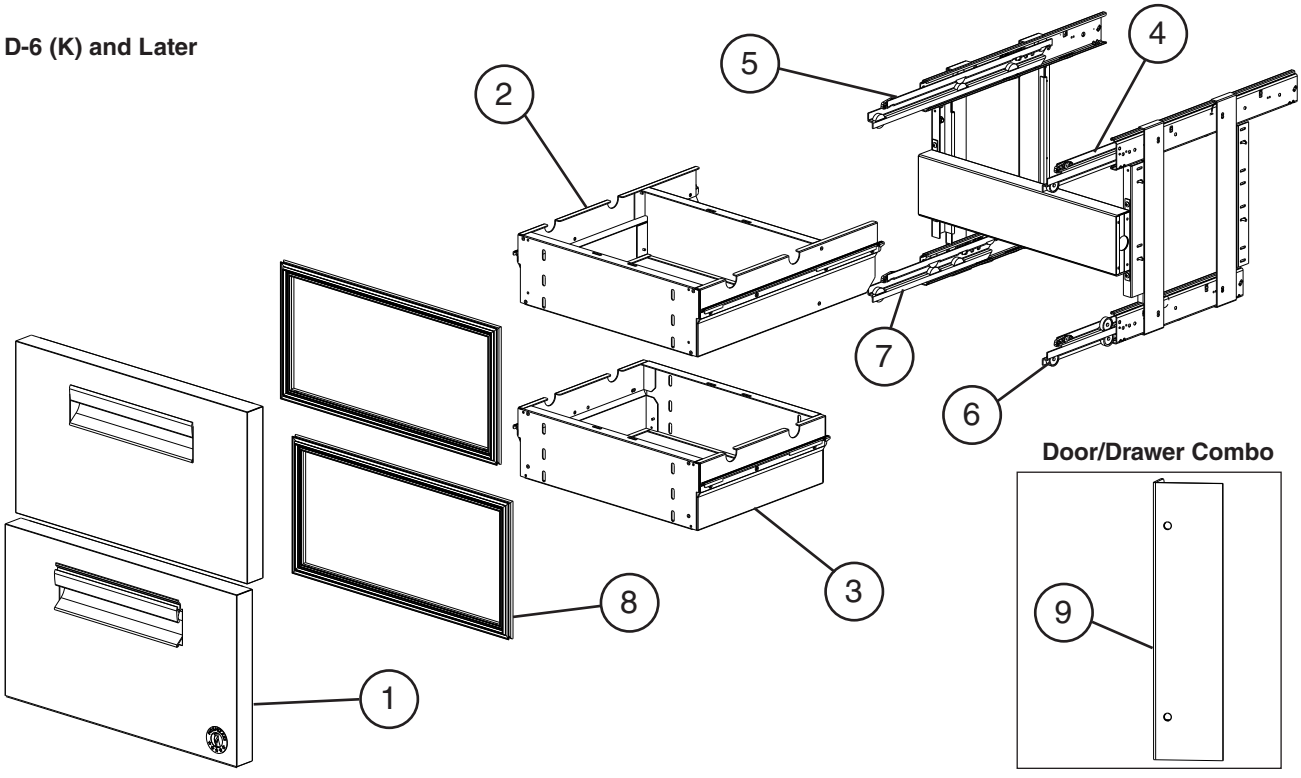

Door/Drawer Combo

1Title: G. Drawer Models: Undercounter, Worktop, Prep Table												
				Required Number								
Index No.	Description	Material or Model Number	Part Number	A-5 to D-6 (J)	D-6 (K) to G-5	G-6 H-5						
1	Drawer Face	**CRM_27-D UC/WT/Prep Table**	2A7510G01	2	2	2						
		CRM_48-D(-D_) and CRM_72-D(-D_) UC/WT/ Prep Table	2A7511G01	2	2	2						
		CRM_60-D(-D_) UC/WT/ Prep Table	2A7512G01	2	2	2						
2	Upper Drawer Box	**CRM_27-D UC/WT/ Prep Table**	3A8185G01	1	-							
			3A8748G01		1	1						
		CRM_48-D(-D_) and CRM_72-D(-D_) UC/WT/ Prep Table	3A8191G01	1	-							
			3A8747G01		1	1						
		CRM_60-D(-D_) UC/WT/ Prep Table	3A8294G01	1	-							
			3A8718G01		1	1						
3	Lower Drawer Box	**CRM_27-D UC/WT/ Prep Table**	3A8185G01	1	1	1						
		CRM_48-D(-D_) and CRM_72-D(-D_) UC/WT/ Prep Table	3A8191G01	1	1	1						
		CRM_60-D(-D_) UC/WT/ Prep Table	3A8294G01	1	1	1						
4	Upper Right Slide Roller		4A5663-02	1	-							
			4A5772-02		1	1						
5	Upper Left Slide Roller		4A5664-02	1	-							
			4A5773-02		1	1						
6	Lower Right Slide Roller		4A5663-02	1	1	1						
7	Lower Left Slide Roller		4A5664-02	1	1	1						
8	Gasket	**CRM_27-D UC/WT/Prep Table**	2A5192-15	2	2	2						
		CRM_48-D(-D_) and CRM_72-D(-D_) UC/WT/Prep Table	2A5192-17	2	2	2						
		CRM_60-D(-D_) UC/WT/Prep Table	2A5192-16	2	2	2						
9	Vertical Mullion Bracket	**Door/Drawer Combo**	3A8187-01		1	1						

H. Accessories & Labels

Undercounter, Worktop, Prep Table

A-5 to H-5

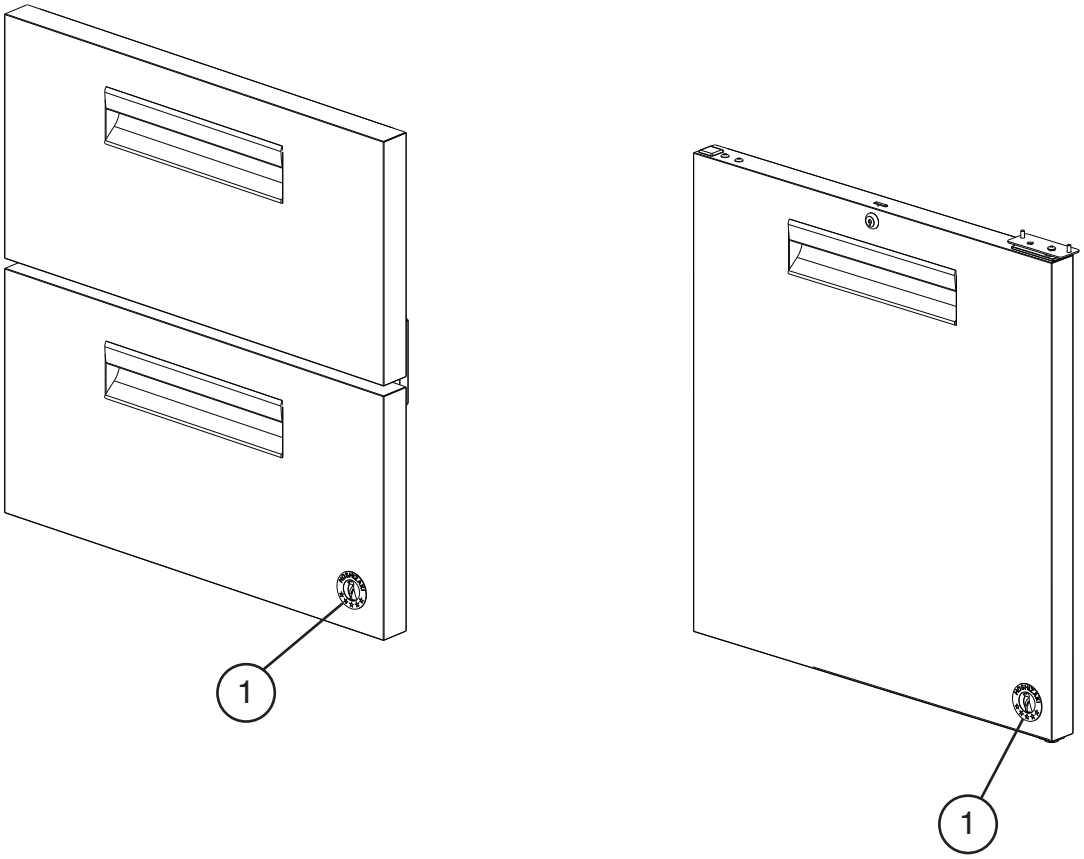

Title: H. Accessories & Labels	Models: Undercounter, Worktop, Prep Table											
				Required Number								
Index No.	Description	Material or Model Number	Part Number	A-5 to D-6 (F)	D-6 (G) to G-5	G-6 H-5						
1	Penguin Label		475552L01	1	1	1						
2	4" Caster Kit (includes items 3 and 4)	**HS-5035 UC**	4A5434A01	1	1	1						
	2" Caster Kit (includes items 3, 4, and 4a)	**HS-5037 UC Low Profile**	4A5436A01	1	1	1						
	6" Caster Kit (includes items 3 and 4)	**HS-5036 WT/Prep Table**	4A5435A01	1	1	1						
3	4" Non-Locking Caster	**UC**	4A5427-01	2	2	2						
	2" Non-Locking Caster	**UC Low Profile**	4A5429-01	2	2	2						
	6" Non-Locking Caster	**WT/Prep Table**	4A5428-01	2	2	2						
4	4" Locking Caster	**UC**	4A5427-02	2	2	2						
	2" Locking Caster	**UC Low Profile**	4A5429-02	2	2	2						
	6" Locking Caster	**WT/Prep Table**	4A5428-02	2	2	2						
4a	Wrench	**UC Low Profile**	4A5492-01	1	1	1						
4b	Caster Bracket	**CRM_48(-xxxx) UC/WT/Prep Table**	3A8957-01		2	2						
Prep Table Specific Parts												
5	1/6 Size Pan, 4" Depth	**-8**	1000000344	8	8	8						
		-10			10	10						
		-15M			15	15						
		-12, -12M		12	12	12						
		-18, -18M, 18MD(x)		18	18	18						
		-24M, -24MD2		24	24	24						
		-30M, -30MD(x)		30	30	30						
6	Cutting Board	**CRMR27-8**	3A4894-09	1	1	1						
		CRMR27-12M	3A4894-07	1	-							
			3A4894-09		1	1						
		CRMR36-10(-15M)	3A4894-15		1	1						
		CRMR48-xx(M)	3A4894-10	1	1	1						
		CRMR60-xx	3A4894-13	1	1	1						
		CRMR60-xxM	3A4894-11	1	-							
			3A4894-13		1	1						
		CRMR72-xx(M(Dx))	3A4894-14	1	1	1						