HOSHIZAKI

Parts List

Cubelet Icemaker/Dispenser

Models
DCM-270BAH

hoshizakiamerica.com

Number: 71195
Issued: 11-2-2001
Revised: 11-7-2018

CONTENTS

Auxiliary Codes 3
Note About Ordering Parts 3
A. Main Assembly 4
B. Refrigeration Circuit 6
C. Icemaking Unit 8
D. Water Circuit 11
E. Control Box A 14
F. Control Box B 16
G. Accessories & Labels 17

Auxiliary Codes

DCM-270BAH

L-0 February 2001
L-1 November 2001
M-0 December 2001
M-1 September 2002
N-0 December 2002
N-1 November 2003
P-1 December 2003
P-2 February 2004
Q-0 December 2004
R-0 December 2005
S-0 January 2007
T-1 January 2008
T-2 May 2008
T-3 December 2008
U-0 January 2009
U-1 July 2009
V-0 January 2010
V-1 March 2010
V-2 May 2010
V-3 September 2010
V-4 October 2010
A-0 January 2011
B-0 January 2012
B-1 March 2012
C-0 (A-H) (C09441H Last) January 2013
C-0 (H-L) (C09442H First) August 2013
C-1 (F) June 2013
C-0 July-November 2013
C-1 (M) December 2013
D-0 January 2014
D-0 (F) (D02377F Last) June 2014
D-0 (F) (D02378F First) June 2014
D-1 June 2014
D-2 September 2014
E-0 January 2015
F-0 January 2016
G-0 January 2017
G-1 February 2017
G-2 April 2017
G-3 August 2017
G-4 December 2017
H-0 January 2018
H-1 February 2018
H-2 March 2018

Auxiliary Code Breakdown

The auxiliary code is the first two characters in the serial number. The first character indicates the year. Years progress or regress in alphabetical order. The series runs from "A" through "V" and the letters "I" and "O" are skipped. The second character indicates significant part changes within a year. Base is "0" and this number advances for each change. In cases where there is a letter in parentheses, this designates the month. This is the last character in the serial number. The series runs from "(A)" through "(M)" and the letter "(I)" is skipped. This designation is only included when identifying a parts change within an auxiliary code.

Note About Ordering Parts

Most assemblies cannot be ordered as complete units; parts in the assemblies generally must be ordered separately.

A. Main Assembly
DCM-270BAH

L-0 to H-2

T-1 and Earlier

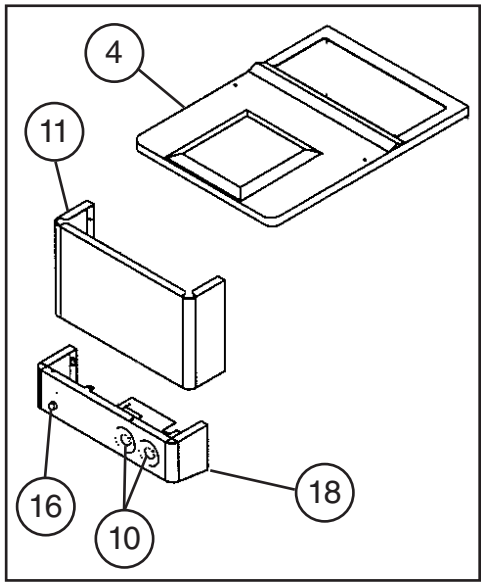

T-2 and Later

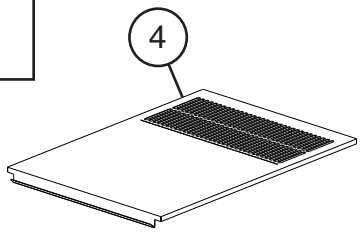

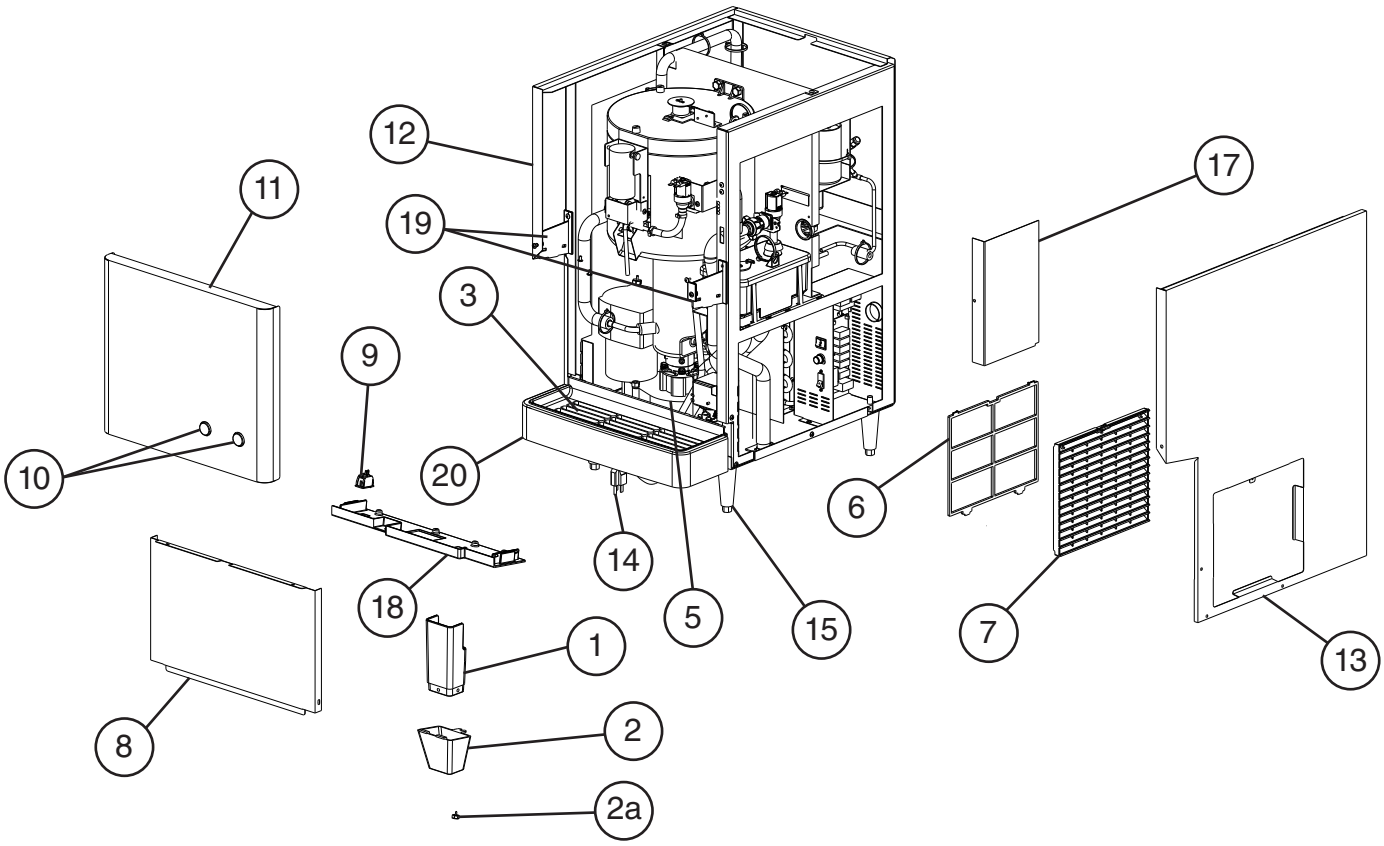

Title: A. Main Assembly Model: DCM-270BAH											
				Required Number							
Index No.	Description	Material or Model Number	Part Number	L-0 L-1	M-0 to S-0 (H)	S-0 (J) to T-1	T-2 to U-0	U-1 to H-0	H-1 H-2		
1	Spout A		105409-01	1	1	1	1	1	1		
2	Spout B		105410-01	1	1	1	1	1	1		
2a	Thumbscrew		415949G08	1	1	1	1	1	1		
3	Grille		102936-02	1	1	-					
			102936-04			1	1	1	1		
4	Top Panel		1A0176-01	1	1	1	-				
			2A2916-01				1	1	1		
5	Gear Motor Drain Pan		3A0766G01	1	1	1	1	1	1		
6	Air Filter		208840G03	1	1	1	1	1	1		
7	Louver		103344-07	1	1	1	1	1	1		
8	Apron Panel		3A1813-01	1	1	-					
			3A4313-01			1	1	1	-		
			3A9532-01						1		
9	Power Switch		421490-01	1	1	1	1	1	1		
10	Push Switch		435745-02	2	2	2	2	2	2		
11	Front Panel		2A1955G01	1	1	1	-				
	Front Panel (includes item 10)		3A5000A01				1	1	1		
12	Left Panel		2A2020G01	1	1	-					
			2A4231-01			1	-				
			2A2919-01				1	-			
			2A5189-01					1	-		
			2A8592-01						1		
13	Right Panel		2A2017G01	1	1	-					
			2A4230-01			1	-				
			2A2918-01				1	-			
			2A5190-01					1	-		
			2A8591-01						1		
14	Power Supply Cord		4A1773-01	1	1	1	1	1	1		
15	Adjustable Leg		4A2145-01	4	4	4	4	4	4		
16	Lamp	Blue Lens	4A2346-01	1	-						
		Red Lens	4A2672-01		1	1	-				
17	Control Box A Cover		3A7511-01	1	1	1	1	1	1		
18	Middle Front Frame-Painted		3A1719G01	1	1	1	-				
	Middle Front Frame		2A4263G02				1	-			
	Middle Front Frame A		2A5140G01					1	1		
19	Middle Front Frame B		3A5407G01					2	2		
20	Drain Pan		318857G04	1	1	1	1	1	1		

B. Refrigeration Circuit

DCM-270BAH

L-0 to H-2

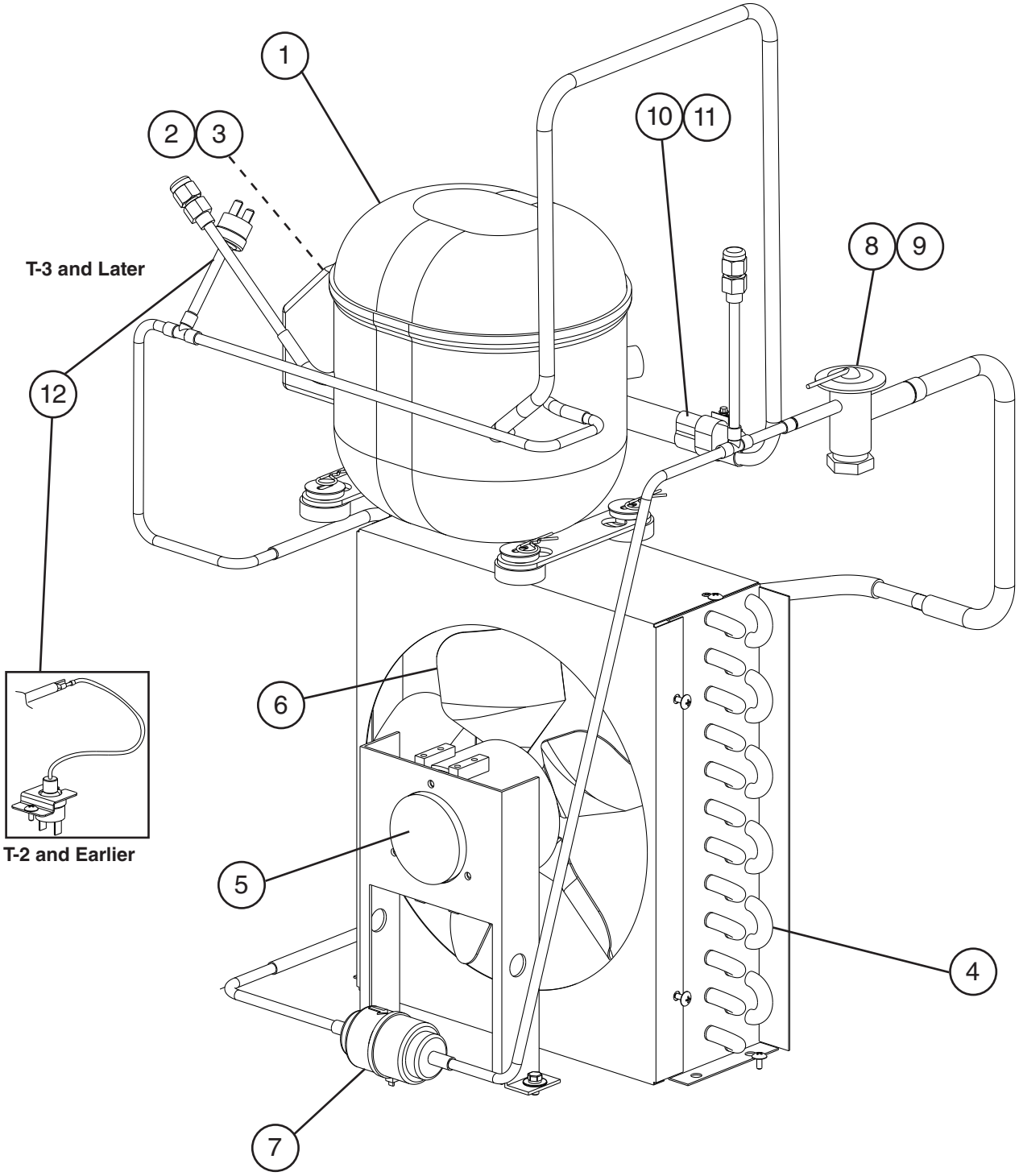

Title: B. Refrigeration Circuit Model: DCM-270BAH													
Index No.	Description	Material or Model Number	Part Number	Required Number									
				L-0 to T-2	T-3 to H-1	H-2							
1	Compressor		4A2272-01	1	-								
			4A4614-01		1	-							
			4A6151-01			1							
2	External Protector		4A2272F03	1	-								
			4A4614F03		1	-							
			4A2293-01			1							
3	Start Relay		4A2294-01	1	-								
			4A4614F04		1	-							
			4A2294-01			1							
4	Condenser		2A0780-01	1	1	1							
5	Fan Motor		4A0815-01	1	1	1							
6	Fan Blade		3A0608-01	1	1	1							
7	Drier		4A1113-01	1	1	1							
8	Thermostatic Expansion Valve		4A1117-01	1	1	1							
9	Thermostatic Expansion Valve Cover		4A1168-01	1	1	1							
10	Thermostatic Expansion Valve Bulb Holder		3A0107-01	1	1	1							
11	Clamp		443461-02	1	1	1							
12	High-Pressure Switch		433441-05	1	-								
			463180-05		1	1							

C. Icemaking Unit
DCM-270BAH
1/2

L-0 to D-1

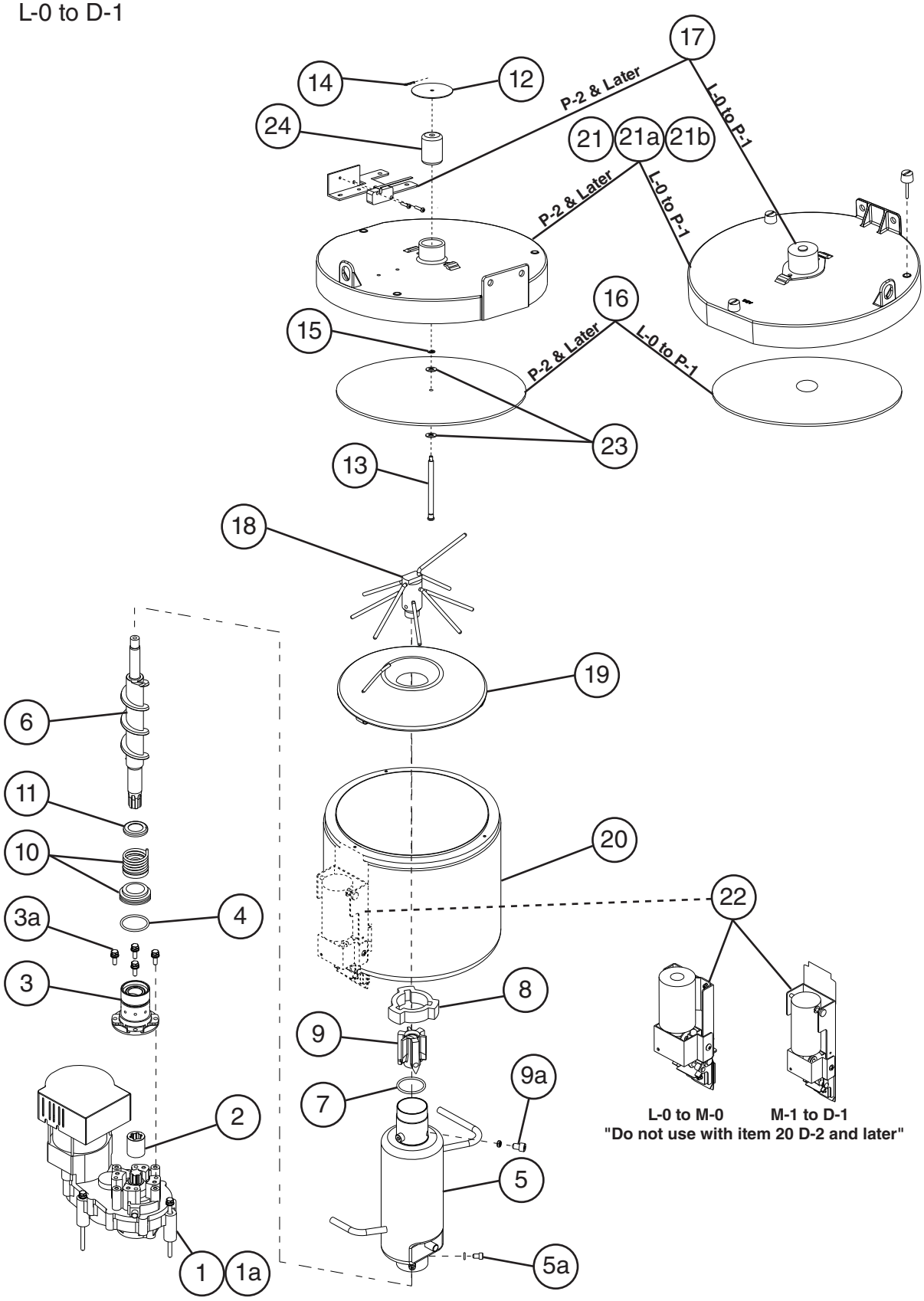

C. Icemaking Unit

DCM-270BAH

2/2

D-2 to H-2

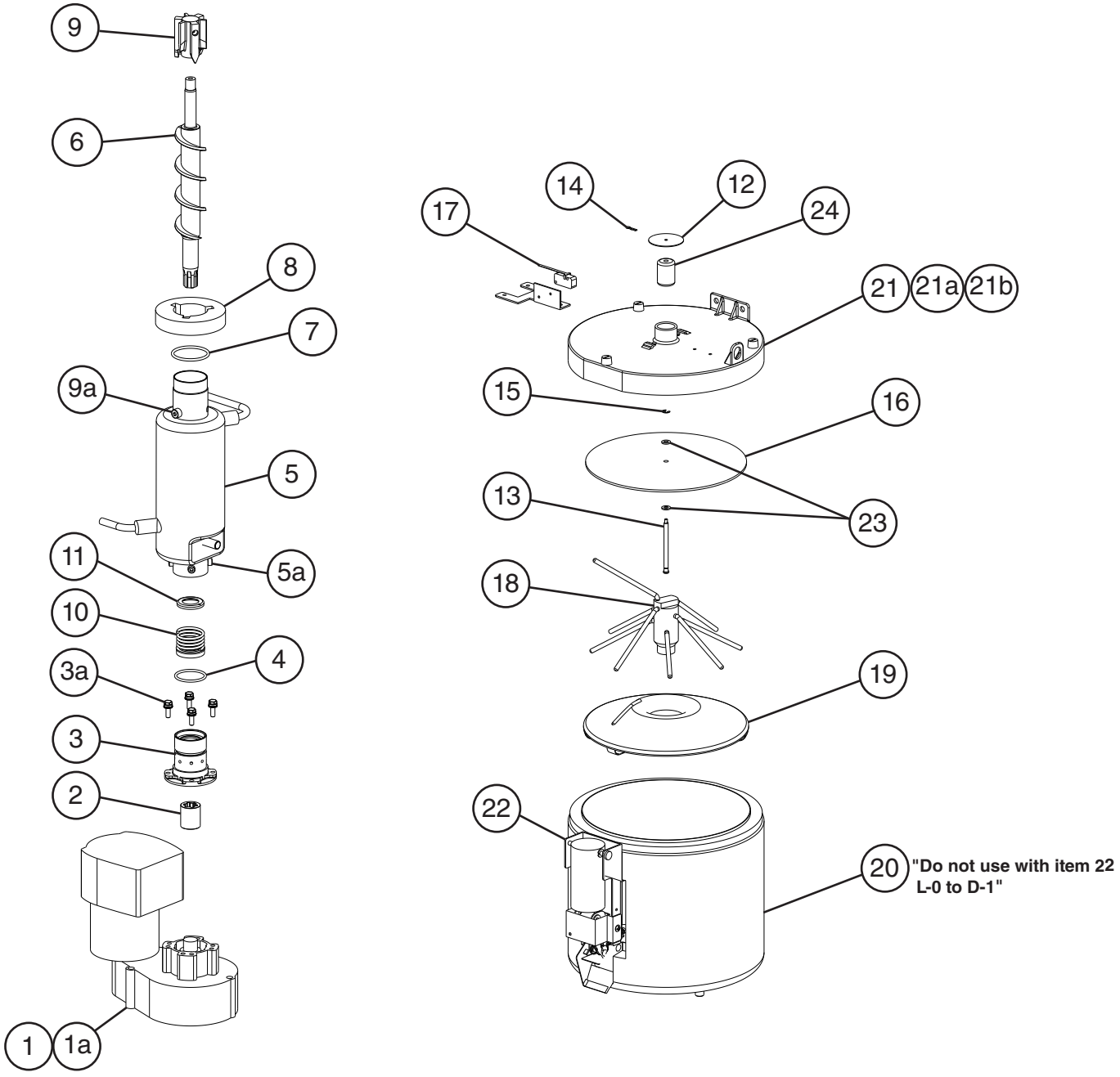

Title: C. Icemaking Unit Model: DCM-270BAH												
Index No.	Description	Material or Model Number	Part Number	Required Number								
				L-0 to M-0	M-1 N-0	N-1 P-1	P-2 to V-1	V-2 to D-1	D-2 to G-2	G-3	G-4 to H-2	
1	Gear Motor		2U0147-01	1	1	1	1	1	1	1	1	
1a	Socket Hex Head Bolt		7S12-0895	3	3	3	3	3	3	3	3	
2	Spline Coupling		418316-01	1	1	1	1	1	1	1	1	
3	Housing		383613G01	1	1	1	1	1	1	1	1	
3a	Bolt	6×20	458660-01	4	4	4	4	4	4	4	4	
4	O-Ring		7618-G040	1	1	1	1	1	1	1	1	
5	Evaporator		332576G01	1	1	1	1	1	1	1	1	
5a	Socket Head Cap Screw	6×10, SS	7S12-0610	4	4	4	4	-				
			P01718-01					4	4	4	4	
6	Auger		341449G01	1	1	1	-					
			361014G01				1	1	1	-		
			269910G01							1	1	
7	O-Ring		7618-P048	1	1	1	1	1	1	1	1	
8	Upper Evaporator Casing Cover		413446-01	1	1	1	1	1	-			
			471716P01						1	1	1	
9	Extruding Head		327236G02	1	1	1	1	1	1	1	-	
			327236G07								1	
9a	Seal Bolt		P01768-02	3	3	3	3	3	3	3	3	
10	Mechanical Seal		432491-01	1	1	1	1	1	1	1	1	
11	Ring		432494-01	1	1	1	1	1	1	1	1	
12	Small Balance Plate		465782-01				1	1	1	1	1	
13	Shaft		465781-01				1	1	1	1	1	
14	Snap Pin		715S-0004				1	1	1	1	1	
15	E-Ring		721S-0005				1	1	1	1	1	
16	Large Balance Plate		454488-01	1	1	1	-					
			417473-02				1	1	1	1	1	
17	Microswitch		459673-01	1	1	1	-					
			461294-01				1	1	1	1	1	
18	Agitator		348969G01	1	1	1	1	1	1	1	1	
19	Drip Ring B		207754-03	1	1	1	1	1	1	1	1	
20	Storage Bin (Do not use aux. code D-2 and later with item 22 aux. code L-0 to D-1)		228516G01	1	1	-						
			228516G07			1	1	1	-			
			253636G01						1	1	1	
21	Storage Bin Top Cover		228513A02	1	1	1	-					
			341039G02				1	1	1	1	1	
21a	Thumbscrew		430825G01	3	3	3	3	3	3	3	3	
21b	Thumbscrew		415949G08	2	2	2	2	2	2	2	2	
22	Shutter Assembly (Do not use aux. code L-0 to D-1 with item 20 aux. code D-2 and later)		231620A02	1	-							
			237274A02		1	1	1	1	-			
			121220A02						1	1	1	
23	Flat Washer		7W22-0613	2	2	2	2	2	2	2	2	
24	Sleeve		465784-01	1	1	1	1	1	1	1	1	

D. Water Circuit

DCM-270BAH

1/2

L-0 to U-0

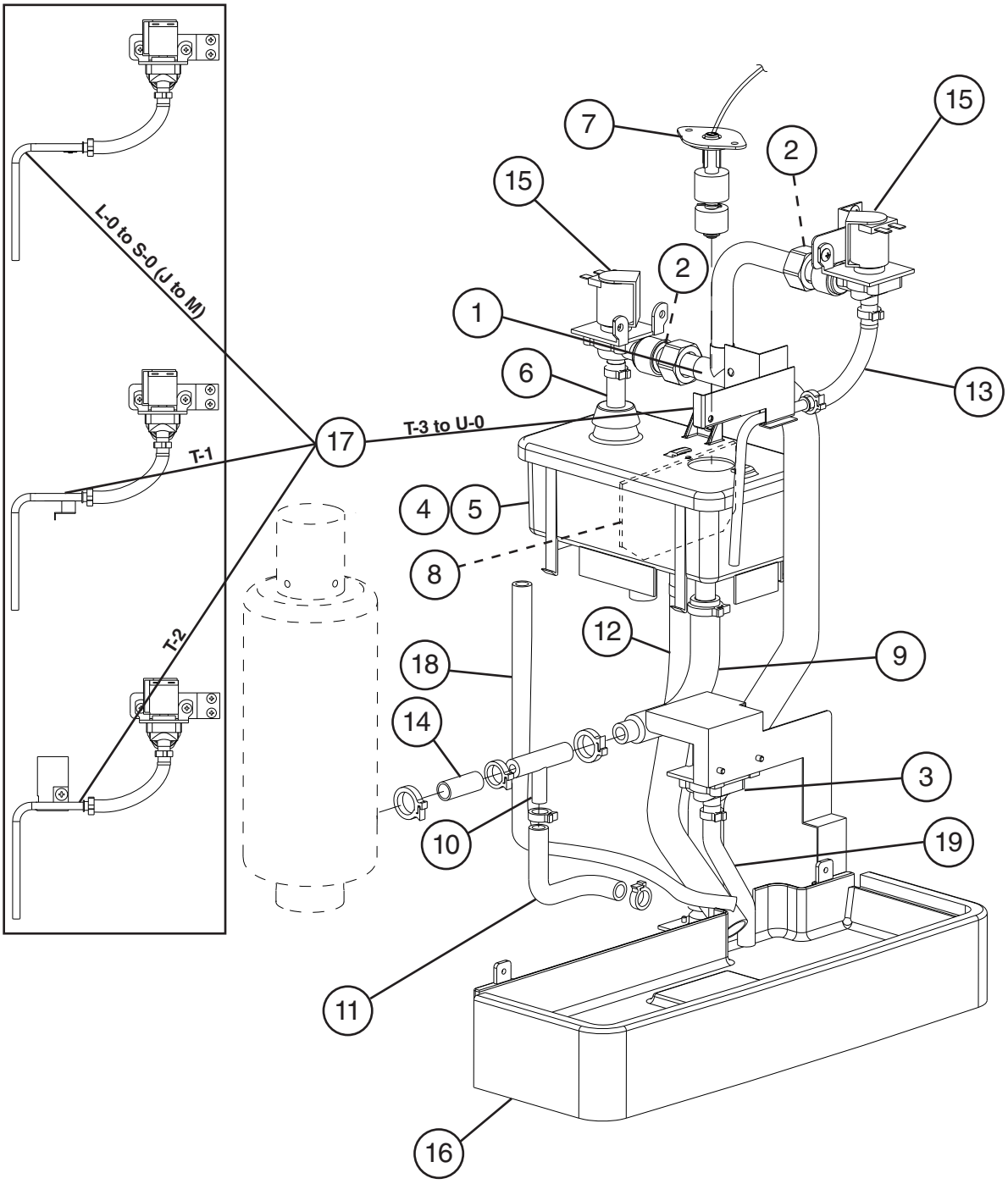

D. Water Circuit

DCM-270BAH

2/2

U-1 to H-2

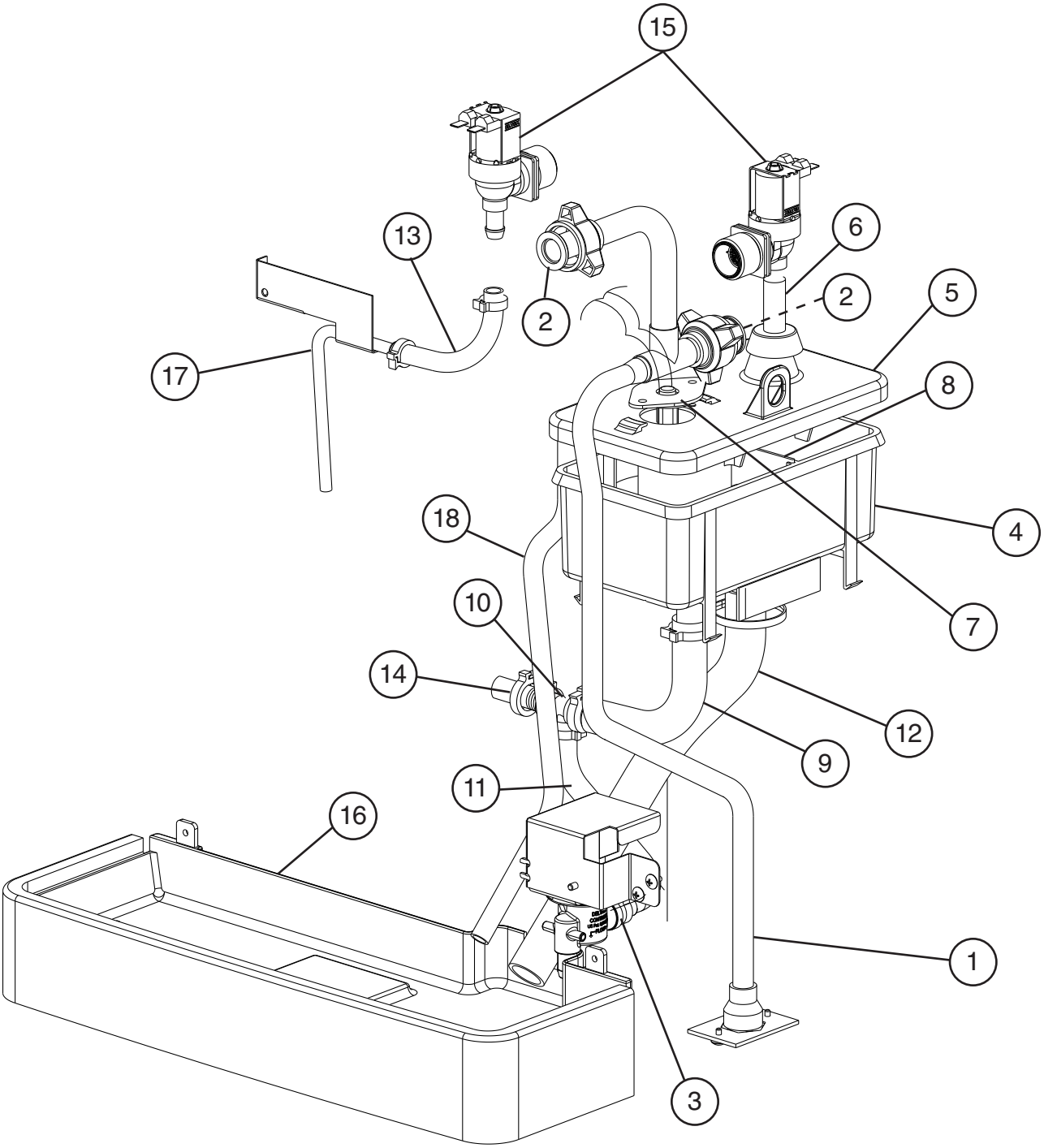

Title: D. Water Circuit Model: DCM-270BAH													
Index No.	Description	Material or Model Number	Part Number	Required Number									
				L-0 to U-0	U-1 to B-0	B-1 to H-2							
1	Water Pipe		2A4181G01	1	1	-							
			2A4181G02			1							
2	Rubber Washer		413854-03	2	2	2							
3	Drain Valve		4A2772-01	1	1	1							
4	Reservoir		2A0753-01	1	1	1							
5	Reservoir Cover		214810-01	1	1	1							
6	Reservoir Inlet		4A0869-01	1	1	1							
7	Float Switch		435490-01	1	1	1							
8	Reservoir Separator		4A1255-01	1	1	1							
9	Reservoir Hose		4A1165-03	1	1	1							
10	Tee		4A1140-01	1	1	1							
11	Silicone Hose	L=85-300 mm	7730I3896	1	1	1							
12	Vinyl Hose	L=310 mm	7725-1923	1	1	1							
13	Vinyl Hose	L=117-170 mm	7725-0912	1	1	1							
14	Silicone Hose	L=35 mm	7730-1114	1	1	1							
15	Inlet Water Valve/Dispense Water Valve		4A0865-01	2	2	-							
			4A5309-01			2							
16	Drain Pan		318857G04	1	1	1							
17	Water Supply Tube		4A4618G01	1	1	1							
18	Silicone Hose (bin drain)	L=350 mm	7730-0912	1	1	1							
19	Vinyl Hose	L=65-75 mm	7716-0913	1	-								
Clamps													
	Hose Clamp	12-14 mm	4A2017-04	6	5	5							
	Hose Clamp	17-21 mm	4A2017-05	2	2	2							
	Hose Clamp	19-22 mm	4A2017-06	1	1	1							
	Hose Clamp	15-17 mm	4A2017-07	1	1	1							

E. Control Box A
DCM-270BAH

L-0 to H-2

C-1 (F) and Earlier

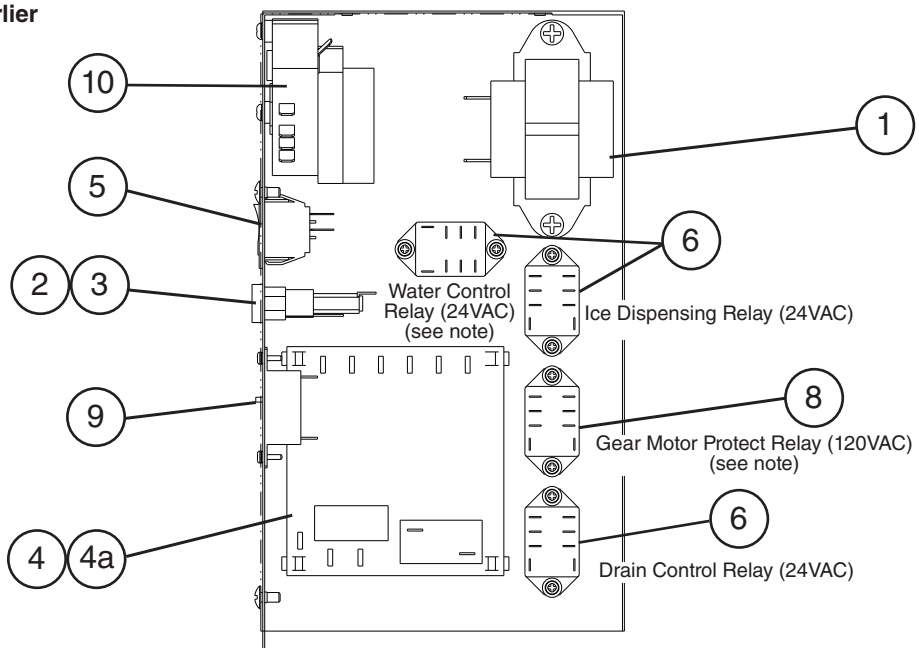

Note: The water control relay and gear motor protect relay are shown in their current positions. The positions were initially reversed and moved to the current positions in 2001. If necessary, confirm your icemaker's layout using the wiring diagram on your unit.

C-1 (M) and Later

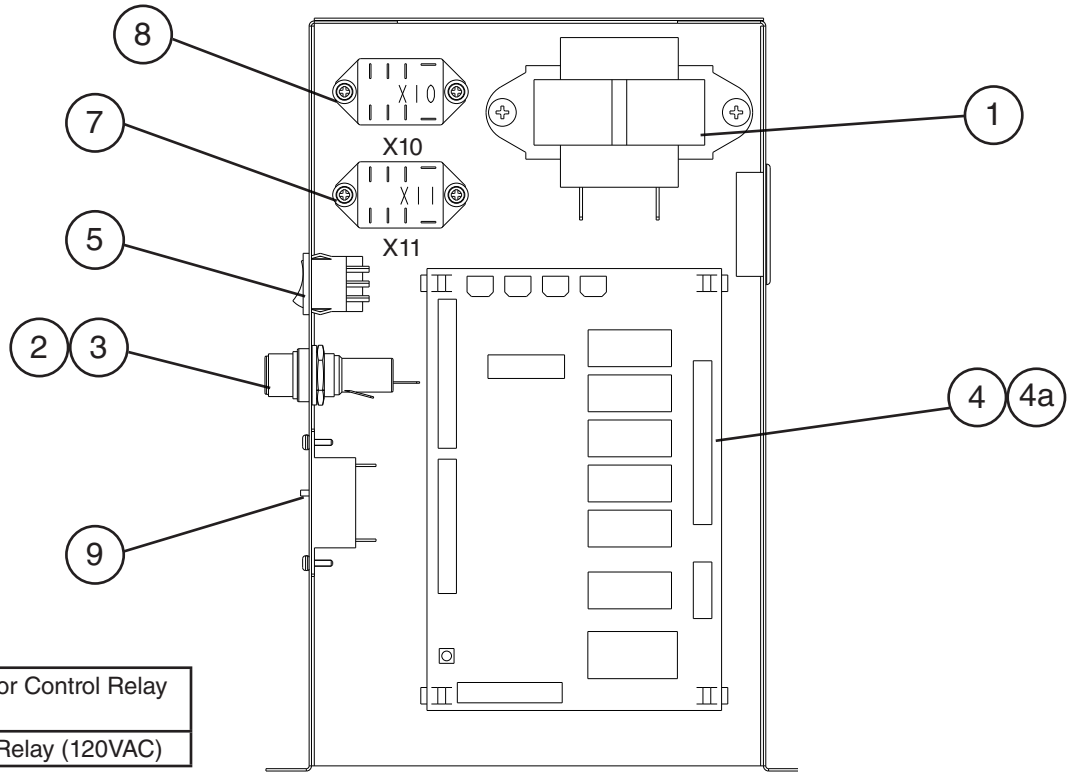

X10	Compressor Control Relay (120VAC)
X11	Dispense Relay (120VAC)

Title: E. Control Box A Model: DCM-270BAH												
index no.	Description	Material or Model Number	Part Number	Required Number								
				L-0 to S-0	U-1 to C-1 (F)	C-1 (M) to H-2						
1	Control Transformer		4A0557-01	1	1	1						
2	Fuse Holder		4A5443-01	1	1	1						
3	Fuse	AGC-1A, 250VAC	4A0893-01	1	1	1						
4	Control Board	Timer Board	4A5591-01	1	1	-						
		Control Board	2A8054-01			1						
4a	Control Board Support		4A0336-03	4	4	4						
5	Control Switch		421491-08	1	-							
			4A1034-01		1	1						
6	Ice Dispense Relay/ Drain Control Relay/ Water Control Relay	24VAC	406132-03	3	3	-						
7	Dispense Relay (X11)	120VAC	418271-03			1						
8	Gear Motor Protect Relay/ Compressor Control Relay (X10)	120VAC	406132-07	1	1	1						
9	Gear Motor External Protector	GMD-1.6A, 120VAC Slow Blow	427253-01	1	1	1						
10	Cam Timer		4A2157-01	1	1	-						

F. Control Box B
DCM-270BAH
L-0 to H-2

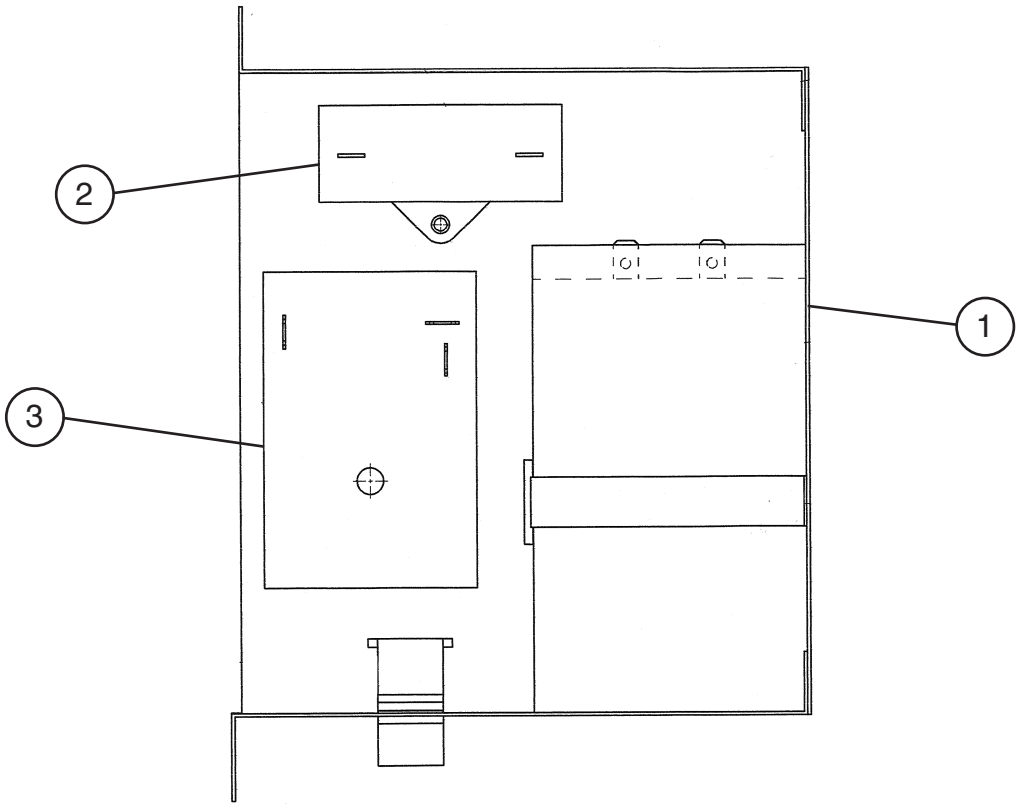

Title: F. Control Box B Model: DCM-270BAH												
				Required Number								
Index No.	Description	Material or Model Number	Part Number	L-0 to C-1 (L)	C-1 (M) to H-2							
1	Start Capacitor	189-227MFD, 330VAC	3A0076-12	1	1							
2	Gear Motor Capacitor	10MFD, 280VAC	416921-05	1	1							
3	Agitation Timer		4A4097-01	1	-							

G. Accessories & Labels

DCM-270BAH

L-0 to H-2

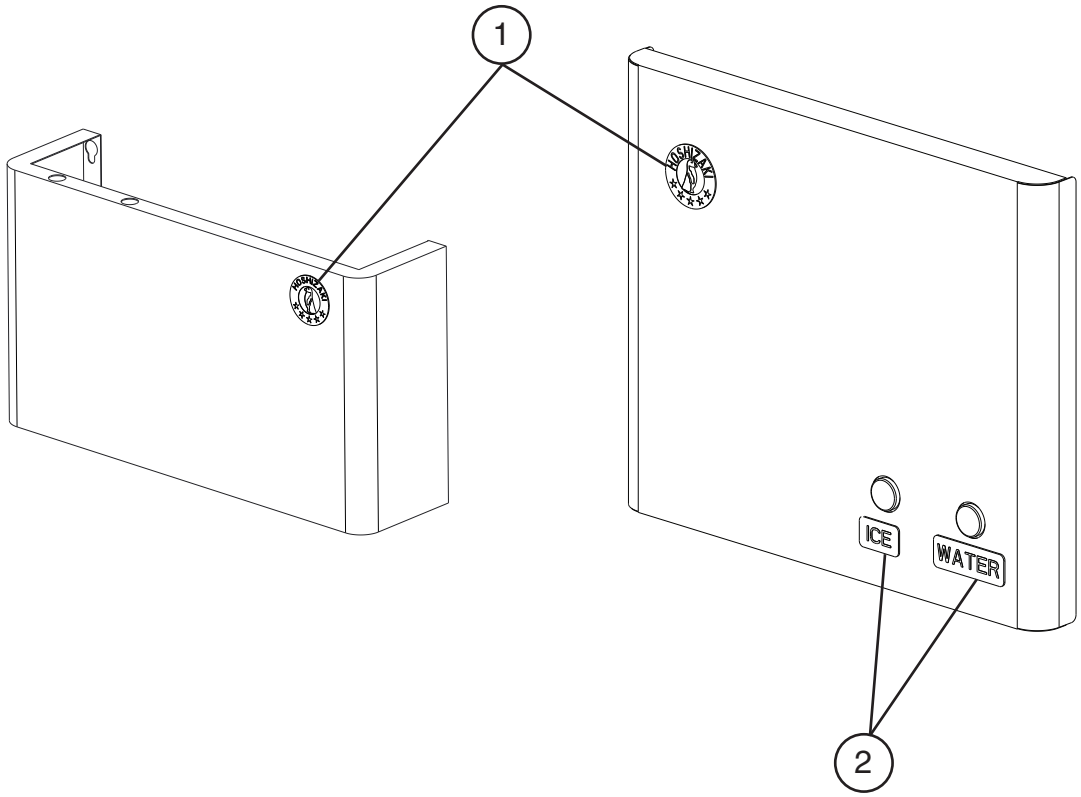

Title: G. Accessories & Labels Model: DCM-270BAH													
Index No.	Description	Material or Model Number	Part Number	Required Number									
				L-0 to T-1	T-2 to H-2								
1	Penguin Label	Left Facing	475552L01	1	-								
		Right Facing	475552L02		1								
2	Ice/Water Label		4A2954-01	1	1								