Hoshizaki America, Inc.

Professional Series
Refrigerated Kitchen Equipment

Models
RH1-SSE-FG
RH1-SSE-FS
RH1-SSE-HG
RH1-SSE-HS

"A Superior Degree of Reliability"

www.hoshizaki.com

PARTS LIST

Number: 71301
Issued: 1-22-2010
Revised: 3-8-2016

CONTENTS

Auxiliary Codes 3
Note About Ordering Parts 3
A. Main Assembly 4
B. Refrigeration Circuit 6
C. Control Box Assembly 8
D. Door-Right Hinged 9
Full Glass: RH1-SSE-FG 9
Full Solid: RH1-SSE-FS 11
Half Glass: RH1-SSE-HG 13
Half Solid: RH1-SSE-HS 15
E. Accessories & Labels 17

Auxiliary Codes

RH1-SSE-FG

V-5	January 2010
B-5	April 2012
C-5	March 2013
D-5	December 2014
E-5	November 2015
F-5	January 2016

RH1-SSE-FS

U-5	November 2009
V-5	January 2010
A-5	March 2011
B-5	June 2012
C-5	March 2013
D-5	September 2014
E-5	March 2015
F-5	January 2016

RH1-SSE-HG

U-5	January 2009
V-5	January 2010
B-5	December 2012
C-5	January 2013
D-5	August 2014
E-5	May 2015

RH1-SSE-HS

U-5	December 2009
V-5	January 2010
A-5	July 2011
B-5	February 2012
C-5	February 2013
E-5	February 2015
F-5	January 2016

Auxiliary Code Breakdown

The auxiliary code is the first two characters in the serial number. The first character indicates the year. Years progress or regress in alphabetical order. The series runs from "A" through "V" and the letters "I" and "O" are skipped. The second character indicates significant part changes within a year. Base is "5" and this number advances for each change.

Note About Ordering Parts

Most assemblies cannot be ordered as complete units; parts in the assemblies generally must be ordered separately.

A. Main Assembly
RH1-SSE-XX
U-5 to F-5

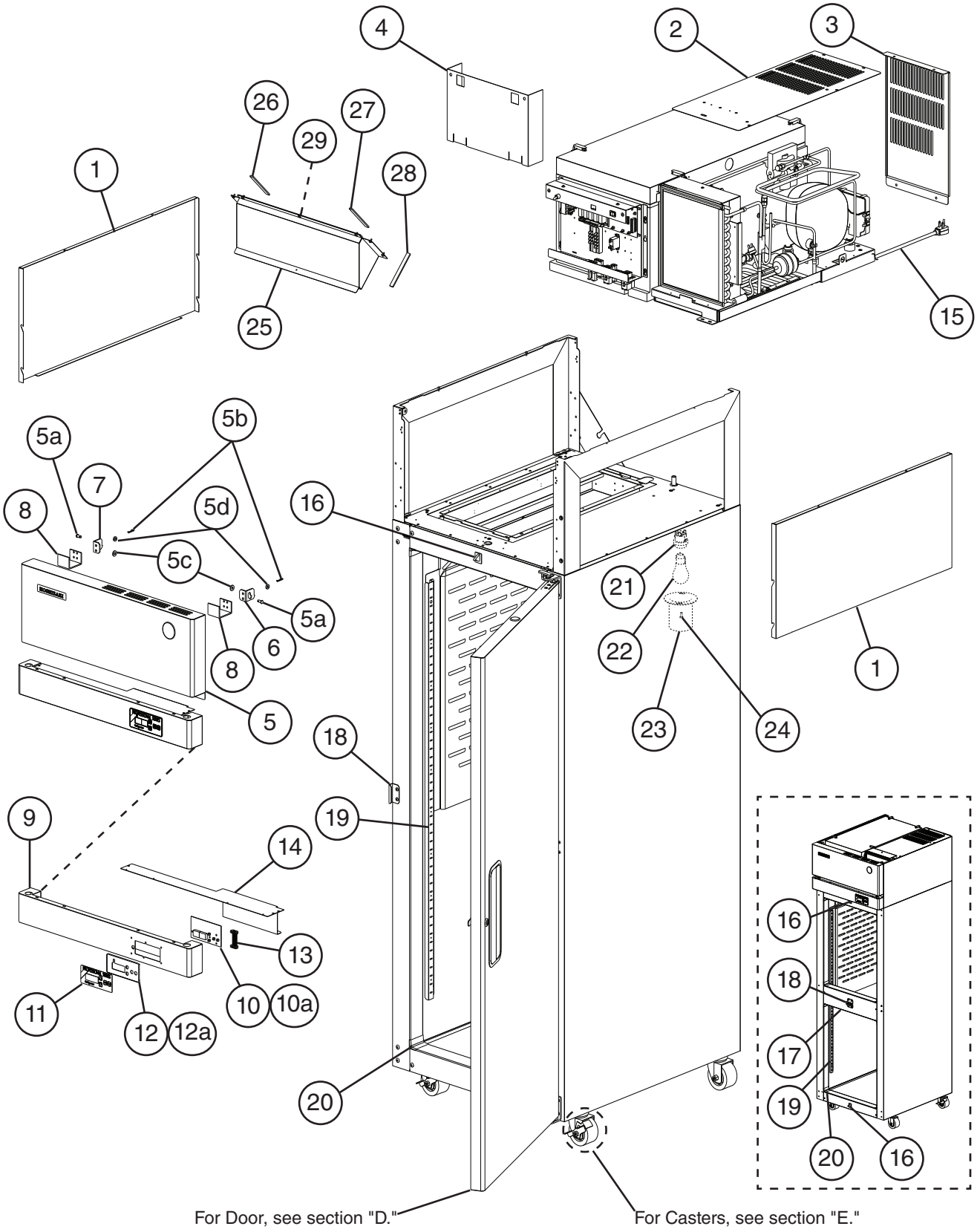

Title: A. Main Assembly Model: RH1-SSE-XX

Index No.	Description	Material or Model Number	Part Number	Required Number								
				U-5 to E-5 (H)	E-5 (J) F-5							
1	Side Panel		2A1800-01	2	2							
2	Top Cover		3A4504G01	1	1							
3	Rear Cover		2A4261-01	1	1							
4	Control Box Cover		2A1031-01	1	1							
5	Front Panel		1A0624-01	1	1							
5a	Clevis Pin		8907-0102	2	2							
5b	Cotter Pin		8907-0103	2	2							
5c	Flat Washer		4A0665-03	2	2							
5d	Hinge Spacer		4A2473-01	2	2							
6	Front Panel Right Hinge		4A2154-01	1	1							
7	Front Panel Left Hinge		4A2153-01	1	1							
8	Hinge Channel		4A2170-01	2	2							
9	Control Panel	**Glass Door**	1A0760-04	1	1							
		Solid Door	1A0760-01	1	1							
10	Display Board		2A0883-01	1	1							
10a	Palnut		4A1398-01	6	6							
11	Display Label		3A5788-01	1	1							
12	Display Board Mount		3A0823-01	1	1							
12a	Nylon Screw		4A1397-01	4	4							
13	Ribbon Cable	L=610 mm	4A1106-01	1	1							
14	Control Panel Cover		2A0133-01	1	1							
15	Power Cord		4A0520-01	1	1							
16	Door Switch	**Full Door**	3A1826-01	1	1							
		Half Door		2	2							
17	Horizontal Mullion (includes item 18)	**Half Door**	2A3917G01	1	1							
18	Strike Plate	**Full Door**	4A4587-01	1	1							
		Half Door		2	2							
19	Pilaster		3A0145-01	6	6							
20	Corner Cover	**Full Door**	3A1751-01	4	4							
		Half Door		8	8							
21	Lampholder		4A2862-01	1	1							
22	Light Bulb		4A2420-01	1	1							
23	Light Shield		4A0465-01	1	1							
24	Cheese Head Screw	5x12, SS	7C52-0512	2	2							
25	Air Distributor (Top)		2A0610-01	1	-							
			1A3951-01		1							
26	Gasket	L=125 mm	4A0808L01	1	-							
		L=105 mm	4A0808L02		1							
27	Gasket	L=125 mm	4A0808L01	1	-							
		L=111 mm	4A0808L02		1							
28	Gasket	L=125 mm	4A0808L01	1	-							
29	Gasket	L=1200 mm	4A0808L02	1	-							
		L=496 mm			1							

B. Refrigeration Circuit
RH1-SSE-XX
U-5 to F-5

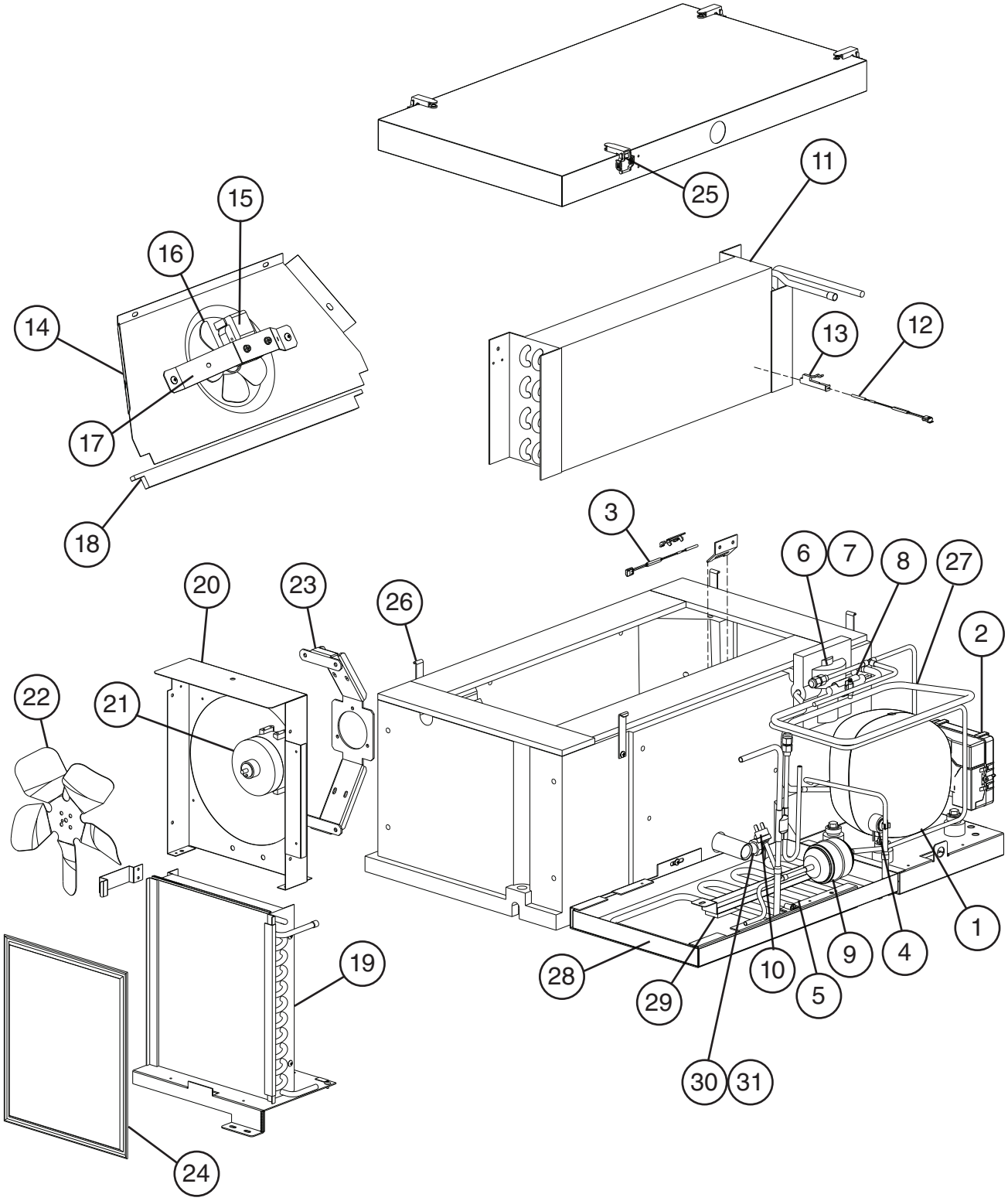

Title: B. Refrigeration Circuit Model: RH1-SSE-XX												
				Required Number								
Index No.	Description	Material or Model Number	Part Number	U-5 to B-5 (A)	B-5 (B) to F-5							
1	Compressor		4A4648-01	1	1							
2	Electronic Unit		4A4673-01	1	1							
3	Cabinet Thermistor		4A1429-01	1	1							
4	Clogged Filter Thermostat		4A0484-01	1	1							
5	Condensate Coil		3A1644-01	1	1							
6	Thermostatic Expansion Valve		4A4597-01	1	1							
7	Thermostatic Expansion Valve Cover		4A4646-01	1	1							
8	Thermostatic Expansion Valve Holder		3A0107-01	1	1							
9	Drier		4A0924-01	1	1							
10	High-Pressure Switch		4A2516-01	1	1							
11	Evaporator		2A1262-01	1	1							
12	Thermistor Defrost		4A1428-01	1	1							
13	Thermistor Clip		320418-01	1	1							
14	Evaporator Fan Shroud		2A0846-01	1	-							
			3A6850G01		1							
15	Evaporator Fan Motor		4A4942-01	1	1							
16	Evaporator Fan Blade		4A2378-01	1	-							
			4A5348-01		1							
17	Evaporator Fan Motor Bracket		3A6849-01	1	1							
18	PVC Gasket	L=522 mm	4A0414L03	1	1							
19	Condenser		2A0623-01	1	1							
20	Condenser Shroud		3A6732G01	1	1							
21	Condenser Fan Motor		4A4620-01	1	1							
22	Condenser Fan Blade		4A5438-01	1	1							
23	Condenser Fan Bracket		3A1564-01	1	1							
24	Air Filter		3A0277-01	1	1							
25	Latch Draw		4A3988-01	4	4							
26	Latch Catch		4A3987-01	4	4							
27	Heat Exchanger		3A5089G01	1	1							
28	Evaporator Drain Pan		2A2760-01	1	1							
29	Condensate Coil Gasket		4A0455-03	1	1							
30	Drain Overflow Fitting		4A2182-01	1	1							
31	Rubber Gasket		413854-03	1	1							

C. Control Box Assembly
RH1-SSE-XX
U-5 to F-5

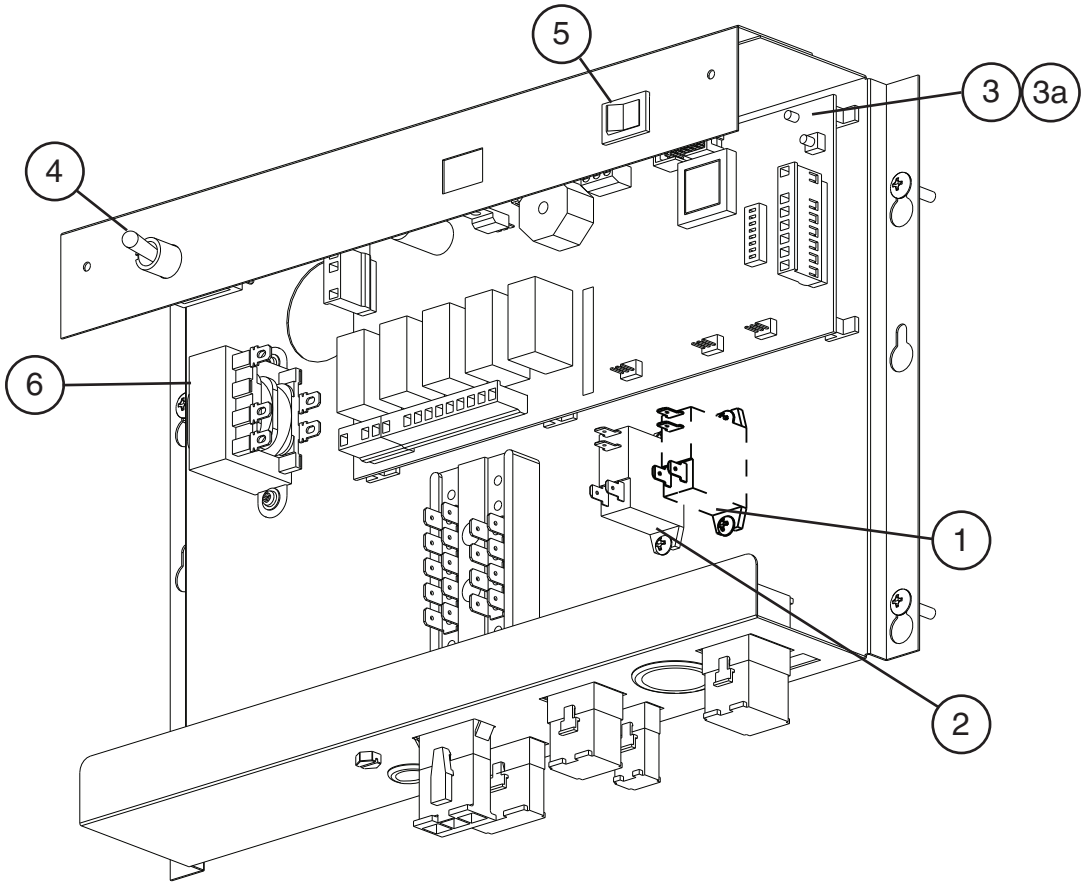

Title: C. Control Box Assembly Model: RH1-SSE-XX												
				Required Number								
Index No.	Description	Material or Model Number	Part Number	U-5 to V-5 (E)	V-5 (F-H)	V-5 (J) to F-5						
1	Perimeter Heater Relay		4A4329-01	1	1	-						
2	Compressor Relay		4A4329-01	1	1	1						
3	Control Board		2A2862-23	1	-							
			2A2862-24		1	1						
3a	Control Board Support		4A0336-03	6	6	6						
4	Power Switch		4A0424-01	1	1	1						
5	Perimeter Heater Switch		4A0418-01	1	1	1						
6	Control Transformer		3A1759-01	1	1	1						

D. Door-Right Hinged
Full Glass: RH1-SSE-FG

V-5 to F-5

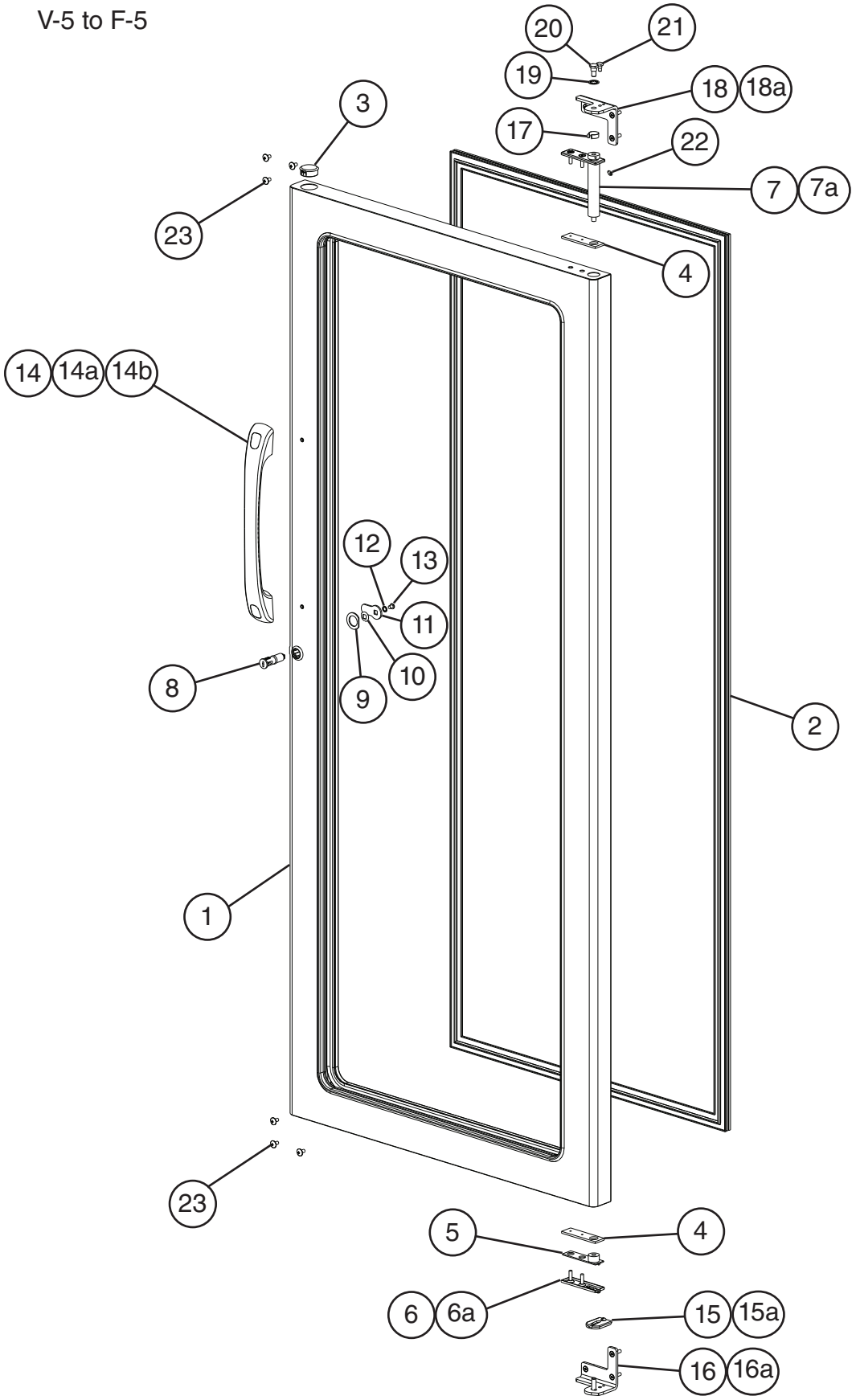

Title: D. Door-Right Hinged Model: Full Glass: RH1-SSE-FG												
				Required Number								
Index No.	Description	Material or Model Number	Part Number	V-5 to F-5								
1	Right Full Glass Door Assembly (Includes items 2 through 7a)		2A4424G01	1								
2	Door Gasket		3A0273-01	1								
3	Locking Hole Plug		4A0586-06	1								
4	Foam Pad		4A2257-01	2								
5	Right Hinge Bottom Bushing		4A0439-01	1								
6	Male Right Hinge Bottom Plate		4A0440-01	1								
6a	Countersunk Screw	5×20, SS	7C42-0520	2								
7	Right Hinge Spring Cartridge		4A0438-01	1								
7a	Countersunk Screw	5×20, SS	7C42-0520	2								
8	Door Lock Tumbler (includes Key 4A0460-01)		4A0462-01	1								
9	Door Lock Washer		4A0670-01	1								
10	Door Lock Stop Washer		4A0458-01	1								
11	Door Lock Cam		4A0228-01	1								
12	Door Lock Lock Washer		4A0459-01	1								
13	Door Lock Screw		4A0461-01	1								
14	Handle		115365-01	1								
14a	Bolt Screw		449879-08	2								
14b	Handle Cap		360643-01	2								
15	Female Right Hinge Bottom Plate		4A0441-01	1								
15a	Stop Plate Screw		4A0483-01	1								
16	Lower Right (LR) Door Hinge Bracket		3A1626-01	1								
16a	Countersunk Screw	5×20, SS	7C42-0520	3								
17	Hinge Bushing Cover		4A0445-01	1								
18	Upper Right (UR) Door Hinge Bracket		3A1580-01	1								
18a	Countersunk Screw	5×20, SS	7C42-0520	3								
19	Hinge Lock Washer		4A0553-01	1								
20	Top Hinge Pivot Pin		4A2179-01	1								
21	Top Hinge Stop Pin		4A2180-01	1								
22	Hinge Tension Screw		4A0446-01	1								
23	Truss Head Screw (filler)	5×10, SS	7C32-0510	6								

D. Door-Right Hinged
Full Solid: RH1-SSE-FS

U-5 to F-5

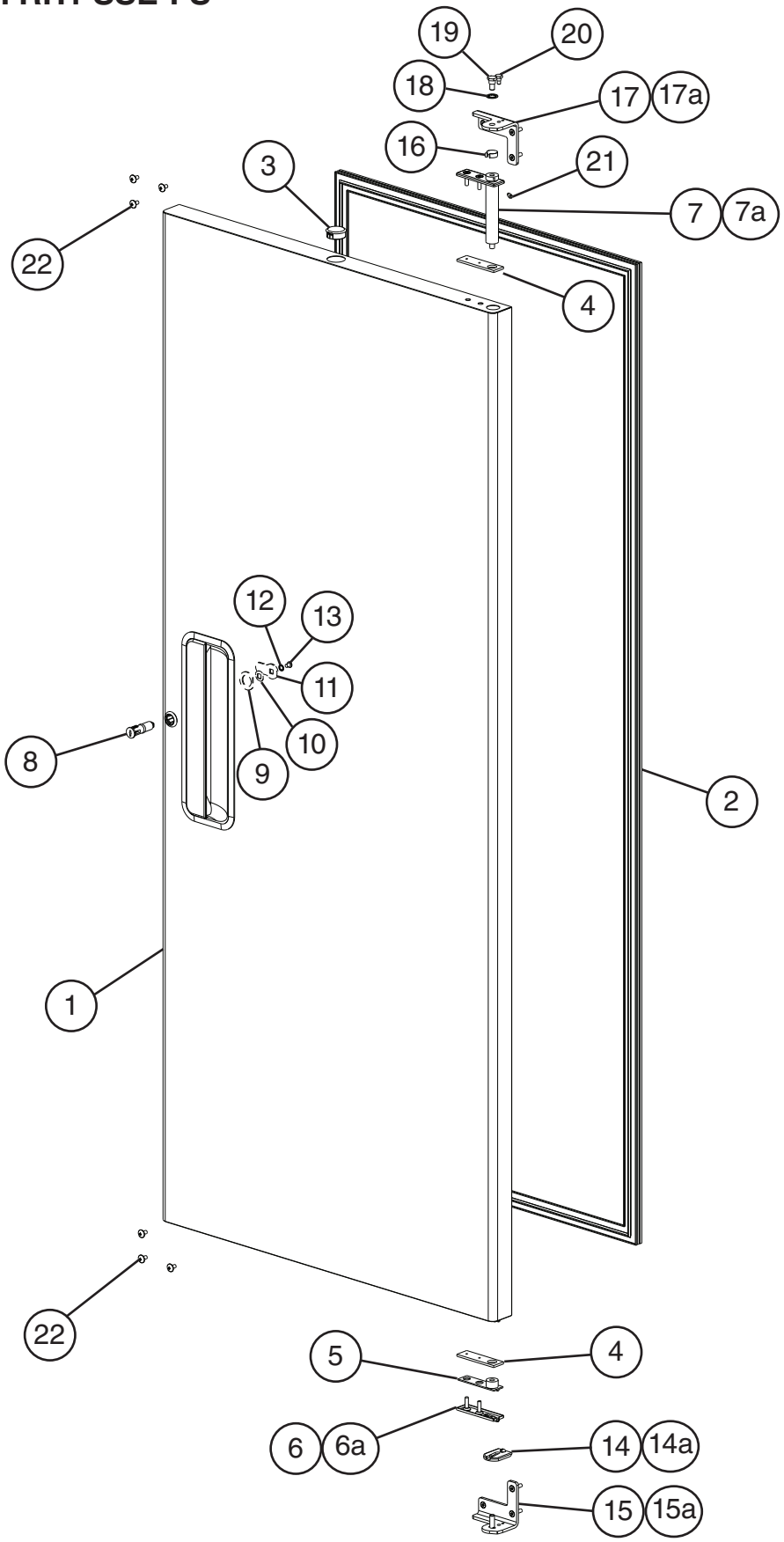

Title: D. Door-Right Model: Full Solid: RH1-SSE-FS												
				Required Number								
Index No.	Description	Material or Model Number	Part Number	U-5 to V-5	A-5 to F-5							
1	Right Full Solid Door Assembly (Includes items 2 through 7a)		2A3940G01	1	-							
			2A6545G01		1							
2	Door Gasket		3A0273-01	1	-							
			2A5192-07		1							
3	Locking Hole Plug		4A0586-06	1	1							
4	Foam Pad		4A2257-01	2	2							
5	Right Hinge Bottom Bushing		4A0439-01	1	2							
6	Male Right Hinge Bottom Plate		4A0440-01	1	2							
6a	Countersunk Screw	5×20, SS	7C42-0520	2	2							
7	Right Hinge Spring Cartridge		4A0438-01	1	1							
7a	Countersunk Screw	5×20, SS	7C42-0520	2	2							
8	Door Lock Tumbler (includes Key 4A0460-01)		4A0462-01	1	1							
9	Door Lock Washer		4A0670-01	1	1							
10	Door Lock Stop Washer		4A0458-01	1	1							
11	Door Lock Cam		4A0228-01	1	1							
12	Door Lock Lock Washer		4A0459-01	1	1							
13	Door Lock Screw		4A0461-01	1	1							
14	Female Right Hinge Bottom Plate		4A0441-01	1	1							
14a	Stop Plate Screw		4A0483-01	1	1							
15	Lower Right (LR) Door Hinge Bracket		3A1626-01	1	1							
15a	Countersunk Screw	5×20, SS	7C42-0520	3	3							
16	Hinge Bushing Cover		4A0445-01	1	1							
17	Upper Right (UR) Door Hinge Bracket		3A1580-01	1	1							
17a	Countersunk Screw	5×20, SS	7C42-0520	3	3							
18	Hinge Lock Washer		4A0553-01	1	1							
19	Top Hinge Pivot Pin		4A2179-01	1	1							
20	Top Hinge Stop Pin		4A2180-01	1	1							
21	Hinge Tension Screw		4A0446-01	1	1							
22	Truss Head Screw (filler)	5×10, SS	7C32-0510	6	6							

D. Door-Right Hinged
Half Glass: RH1-SSE-HG

U-5 to E-5

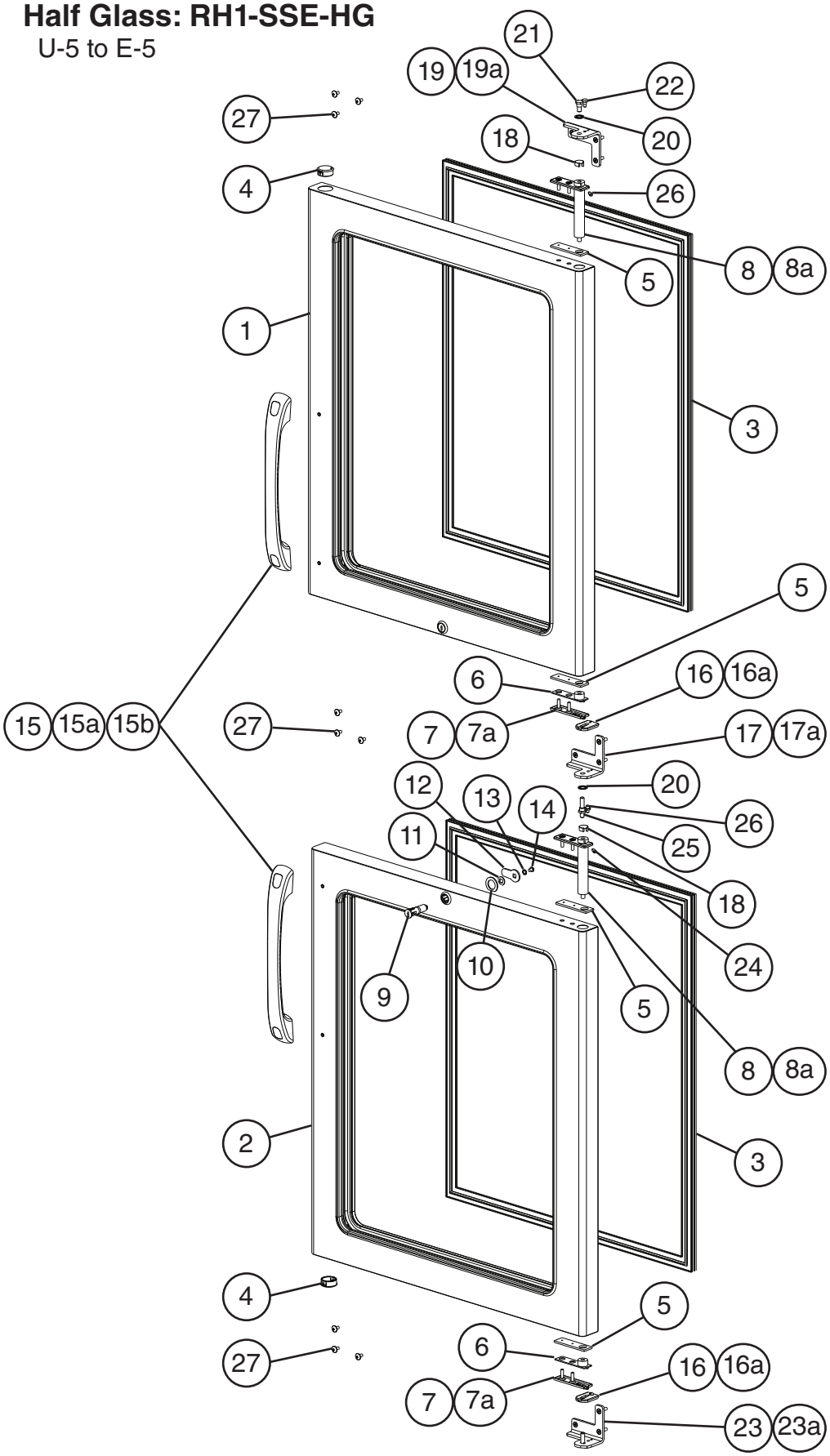

Title: D. Door-Right Model: Half Glass: RH1-SSE-HG												
				Required Number								
Index No.	Description	Material or Model Number	Part Number	U-5 to E-5								
1	Upper Right Half Glass Door (Includes half the quantity of items 3 through 8a)		2A4419G01	1								
2	Lower Right Half Glass Door (Includes half the quantity of items 3 through 8a)		2A4420G01	1								
3	Door Gasket		3A0273-02	2								
4	Locking Hole Plug		4A0586-06	2								
5	Foam Pad		4A2257-01	4								
6	Right Hinge Bottom Bushing		4A0439-01	2								
7	Male Right Hinge Bottom Plate		4A0440-01	2								
7a	Countersunk Screw	5×20, SS	7C42-0520	4								
8	Right Hinge Spring Cartridge		4A0438-01	2								
8a	Countersunk Screw	5×20, SS	7C42-0520	4								
9	Door Lock Tumbler (includes Key 4A0460-01)		4A0462-01	2								
10	Door Lock Washer		4A0670-01	2								
11	Door Lock Stop Washer		4A0458-01	2								
12	Door Lock Cam		4A0228-01	2								
13	Door Lock Lock Washer		4A0459-01	2								
14	Door Lock Screw		4A0461-01	2								
15	Handle		115365-01	2								
15a	Bolt Screw		449879-08	4								
15b	Handle Cap		360643-01	4								
16	Female Right Hinge Bottom Plate		4A0441-01	2								
16a	Stop Plate Screw		4A0483-01	2								
17	Upper Left (UL) Door Hinge Bracket		3A1581-01	1								
17a	Countersunk Screw		7C42-0520	3								
18	Hinge Bushing Cover		4A0445-01	2								
19	Upper Right (UR) Door Hinge Bracket		3A1580-01	1								
19a	Countersunk Screw	5×20, SS	7C42-0520	3								
20	Hinge Lock Washer		4A0553-01	2								
21	Top Hinge Pivot Pin		4A2179-01	1								
22	Top Hinge Stop Pin		4A2180-01	1								
23	Lower Right (LR) Door Hinge Bracket		3A1626-01	1								
23a	Countersunk Screw		7C42-0520	3								
24	Hinge Tension Screw		4A0446-01	2								
25	Bottom HingePivot Pin		4A1735-01	1								
26	Bottom Hinge Stop Pin		4A1734-01	1								
27	Truss Head Screw (filler)	5×10, SS	7C32-0510	9								

D. Door-Right
Half Solid: RH1-SSE-HS
U-5 to F-5

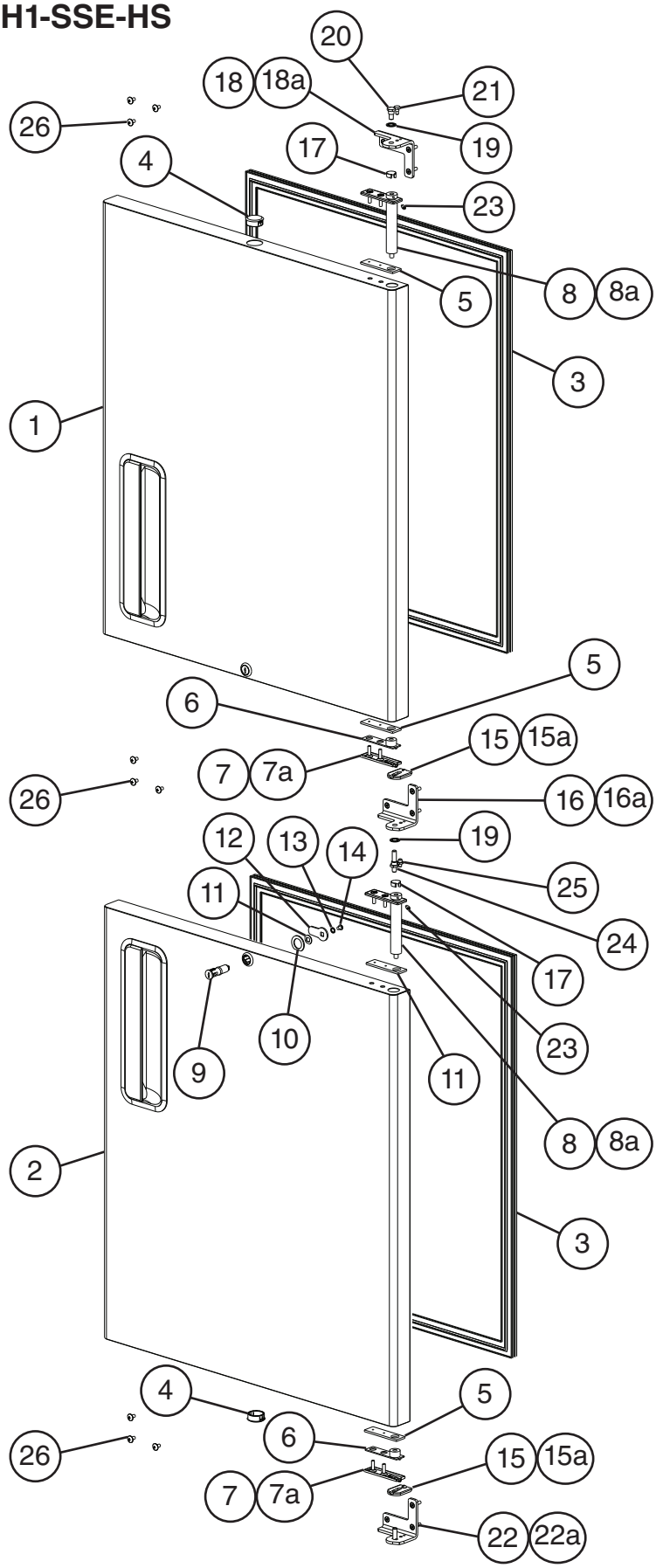

Title: D. Door-Right Model: Half Solid: RH1-SSE-HS												
				Required Number								
Index No.	Description	Material or Model Number	Part Number	U-5 to V-5	A-5 to F-5							
1	Upper Right Half Solid Door (Includes half the quantity of items 3 through 8a)	**Upper Right**	2A3934G01	1	-							
			2A6549G01		1							
2	Lower Right Half Solid Door (Includes half the quantity of items 3 through 8a)	**Lower Right**	2A3935G01	1	-							
			2A6550G01		1							
3	Door Gasket		3A0273-02	2	-							
			2A5192-08		2							
4	Locking Hole Plug		4A0586-06	2	2							
5	Foam Pad		4A2257-01	4	4							
6	Right Hinge Bottom Bushing		4A0439-01	2	2							
7	Male Right Hinge Bottom Plate		4A0440-01	2	2							
7a	Countersunk Screw	5×20, SS	7C42-0520	4	4							
8	Right Hinge Spring Cartridge		4A0438-01	2	2							
8a	Countersunk Screw	5×20, SS	7C42-0520	4	4							
9	Door Lock Tumbler (includes Key 4A0460-01)		4A0462-01	2	2							
10	Door Lock Washer		4A0670-01	2	2							
11	Door Lock Stop Washer		4A0458-01	2	2							
12	Door Lock Cam		4A0228-01	2	2							
13	Door Lock Lock Washer		4A0459-01	2	2							
14	Door Lock Screw		4A0461-01	2	2							
15	Female Right Hinge Bottom Plate		4A0441-01	2	2							
15a	Stop Plate Screw		4A0483-01	2	2							
16	Upper Left (UL) Door Hinge Bracket		3A1581-01	1	1							
16a	Countersunk Screw	5×20, SS	7C42-0520	3	3							
17	Hinge Bushing Cover		4A0445-01	2	2							
18	Upper Right (UR) Door Hinge Bracket		3A1580-01	1	1							
18a	Countersunk Screw	5×20, SS	7C42-0520	3	3							
19	Hinge Lock Washer		4A0553-01	2	2							
20	Top Hinge Pivot Pin		4A2179-01	1	1							
21	Hinge Stop Pin		4A2180-01	1	1							
22	Lower Right (LR) Door Hinge Bracket		3A1626-01	1	1							
22a	Countersunk Screw	5×20, SS	7C42-0520	3	3							
23	Hinge Tension Screw		4A0446-01	2	2							
24	Bottom Hinge Pivot Pin		4A1735-01	1	1							
25	Bottom Hinge Stop Pin		4A1734-01	1	1							
26	Truss Head Screw (filler)	5×10, SS	7C32-0510	9	9							

E. Accessories & Labels

RH1-SSE-XX

U-5 to F-5

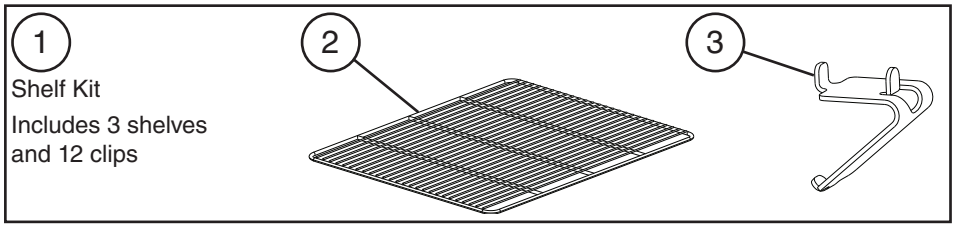

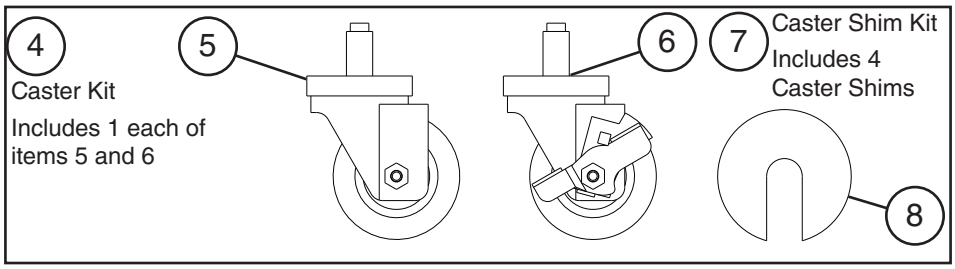

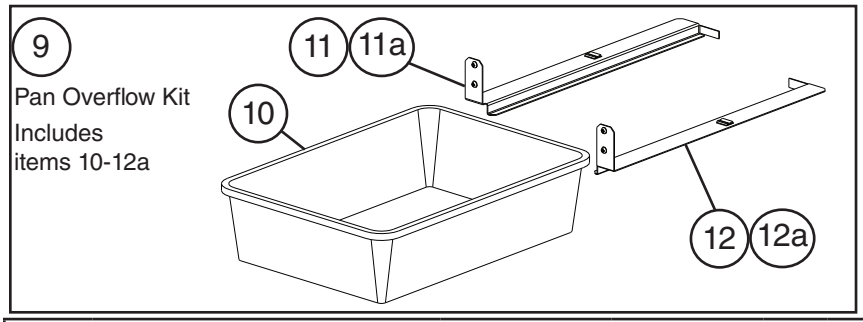

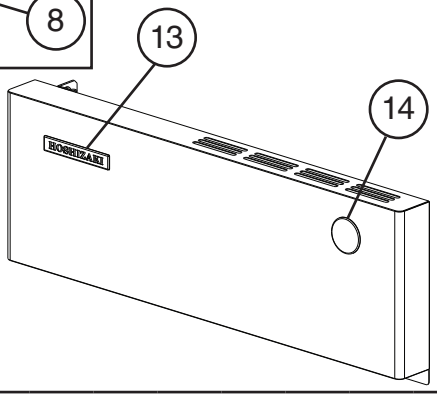

Title: E. Accessories & Labels Model: RH1-SSE-XX

Index No.	Description	Material or Model Number	Part Number	Required Number								
				U-5 to A-5 (H)	A-5 (J) to F-5							
1	Shelf Kit (3 Pack) (Includes items 2 and 3)	HS-3508	3A1416A03	1	1							
2	Shelf		3A1387-01	3	3							
3	Shelf Clip		428957-01	12	12							
4	Leg Kit (4 pack)	HS-3512	4A0930-01	1	-							
	Caster Kit (Includes 2 each of items 5 and 6)	HS-3546	4A4712G01		1							
5	Caster		4A1347-01		2							
6	Brake Caster		4A1347-02		2							
7	Caster Shim Kit	HS-3590	4A3659A01		1							
8	Caster Shim		4A3658-01		4							
9	Pan Overflow Kit (includes items 9 through 11a)	HS-3521	3A1666A01	2	2							
10	Overflow Pan		4A3419G01	1	1							
11	Overflow Pan Bracket (A)		4A0878-01	1	1							
11a	T2 Screw	4×8, SS	7P32-0408	2	2							
12	Overflow Pan Bracket (B)		4A0879-01	1	1							
12a	T2 Screw	4×8, SS	7P32-0408	2	2							
13	Emblem		4A0560-01	1	1							
14	Penguin Label		456246-02	1	1							