Hoshizaki America, Inc.

Condensing Unit

Model
SRC-14H

"A Superior Degree of Reliability"

www.hoshizaki.com

PARTS LIST

Number: 71334
Issued: 7-18-2011
Revised: 3-7-2016

CONTENTS

Auxiliary Codes 3
Note About Ordering Parts 3
A. Main Assembly & Refrigeration Circuit 4
B. Control Box Assembly 6
C. Accessories & Labels 7

Auxiliary Codes

SRC-14H

A-0 June 2011
B-0 January 2012
B-1 February 2012
C-0 January 2013
D-0 January 2014
E-0 February 2015
F-0 January 2016

Auxiliary Code Breakdown

The auxiliary code is the first two characters in the serial number. The first character indicates the year. Years progress or regress in alphabetical order. The series runs from "A" through "V" and the letters "I" and "O" are skipped. The second character indicates significant part changes within a year. Base is "0" and this number advances for each change. In cases where there is a letter in parentheses, this designates the month. This is the last character in the serial number. The series runs from "(A)" through "(M)" and the letter "(I)" is skipped. This designation is only included when identifying a parts change within an auxiliary code.

Note About Ordering Parts

Most assemblies cannot be ordered as complete units; parts in the assemblies generally must be ordered separately.

A. Main Assembly & Refrigeration Circuit

SRC-14H

A-0 to F-0

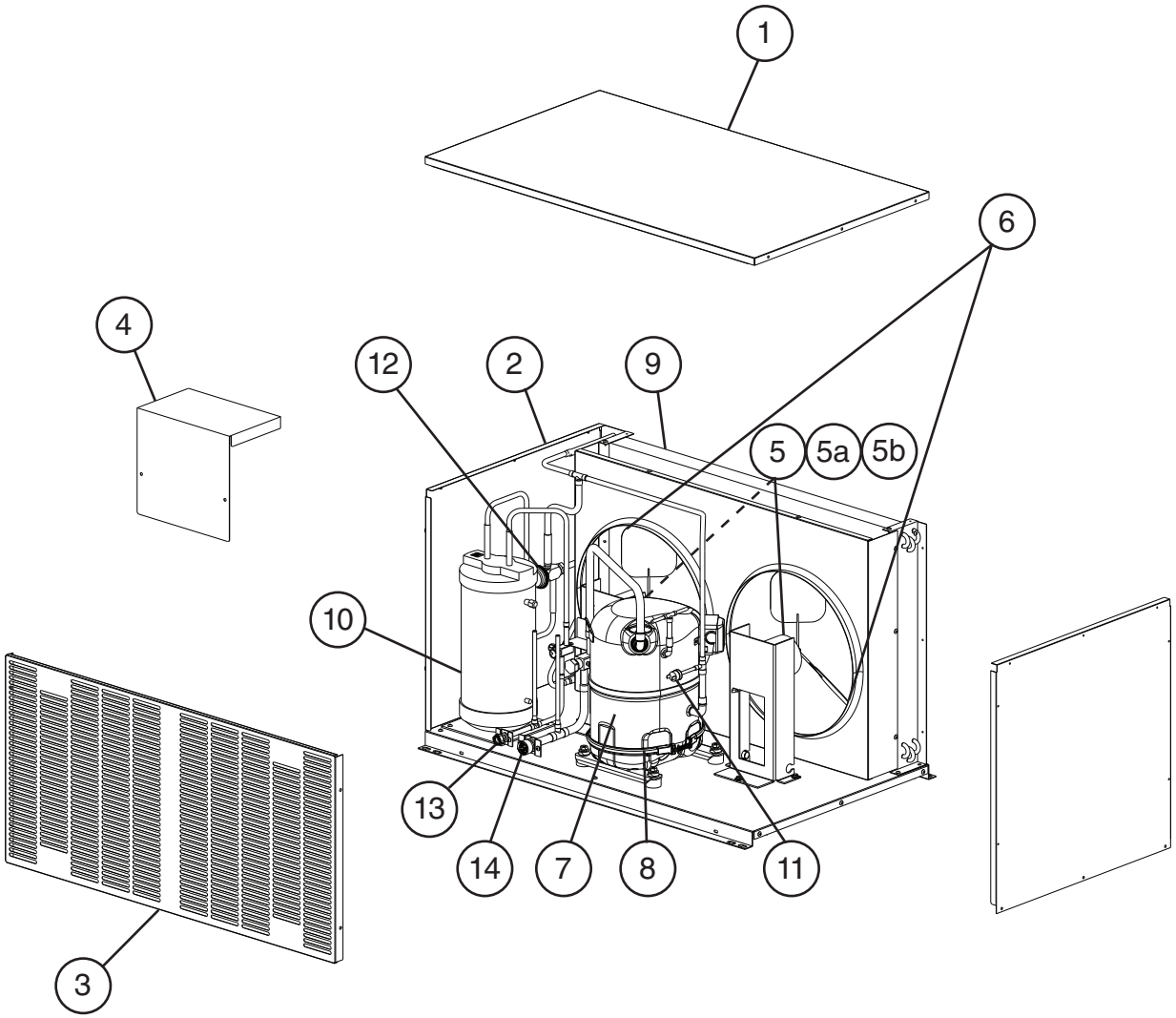

Title: A. Main Assembly & Refrigeration Circuit Model: SRC-14H												
Index No.	Description	Material or Model Number	Part Number	Required Number								
				A-0 to B-0	B-1 to B-1 (K)	B-1 (L) to F-0						
Condensing Unit												
1	Top Panel		3A5858-01	1	1	1						
2	Side Panel		3A5855-01	2	2	2						
3	Louver Panel		213968-01	1	1	1						
4	Control Box Cover		3A3182-01	1	1	1						
5	Fan Motor		4A3201-01	2	2	2						
5a	Split Lock Washer		7L22I0832	8	8	-						
5b	Self Locking Nut		7N21I0832	8	8	8						
6	Fan Blade		4A1493-01	2	2	2						
Refrigeration Circuit												
7	Compressor		4A4134-02	1	-							
	(B-1 and later utilize external crankcase heater-item 8)		4A4134-03		1	1						
8	Crankcase Heater		4A5397-02		1	1						
9	Condenser		104777-02	1	1	1						
10	Receiver		438209-01	1	1	1						
11	High-Pressure Switch		463180-05	1	1	1						
12	Headmaster (Condensing Pressure Regulator)		4A0229-01	1	1	1						
13	Liquid Line Coupling		426554-01	1	1	1						
14	Suction Line Coupling		448569-01	1	1	1						

B. Control Box Assembly
SRC-14H
A-0 to F-0

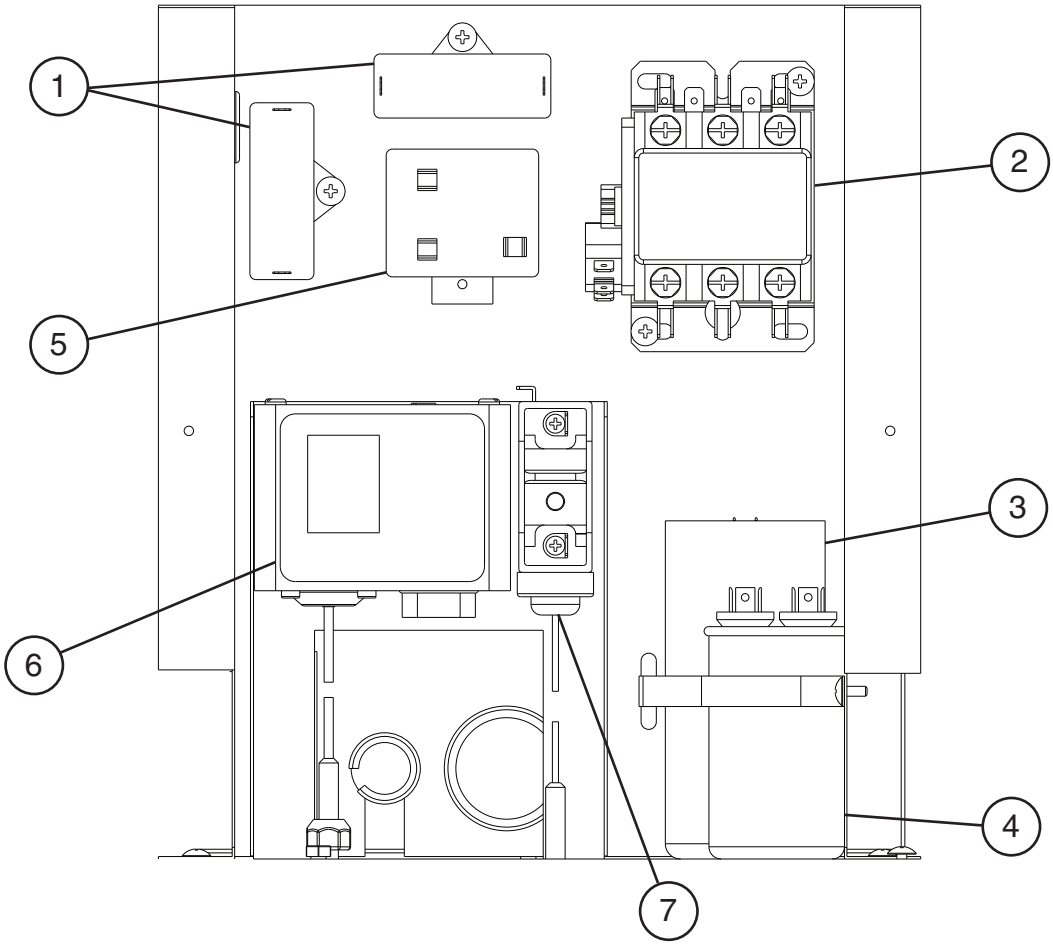

Title: B. Control Box Assembly Model: SRC-14H												
				Required Number								
Index No.	Description	Material or Model Number	Part Number	A-0 to F-0								
1	Fan Motor Capacitor	10MFD, 250VAC	443192-01	2								
2	Magnetic Contactor		4A0794-01	1								
3	Start Capacitor	145-174MFD, 220VAC	3A0076-11	1								
4	Run Capacitor	30MFD, 370VAC	3A2005-03	1								
5	Start Relay		4A1107-13	1								
6	Control Low-Pressure Switch		4A5353G01	1								
7	Safety Low-Pressure Switch		4A3497-01	1								

C. Accessories & Labels
SRC-14H
A-0 to F-0

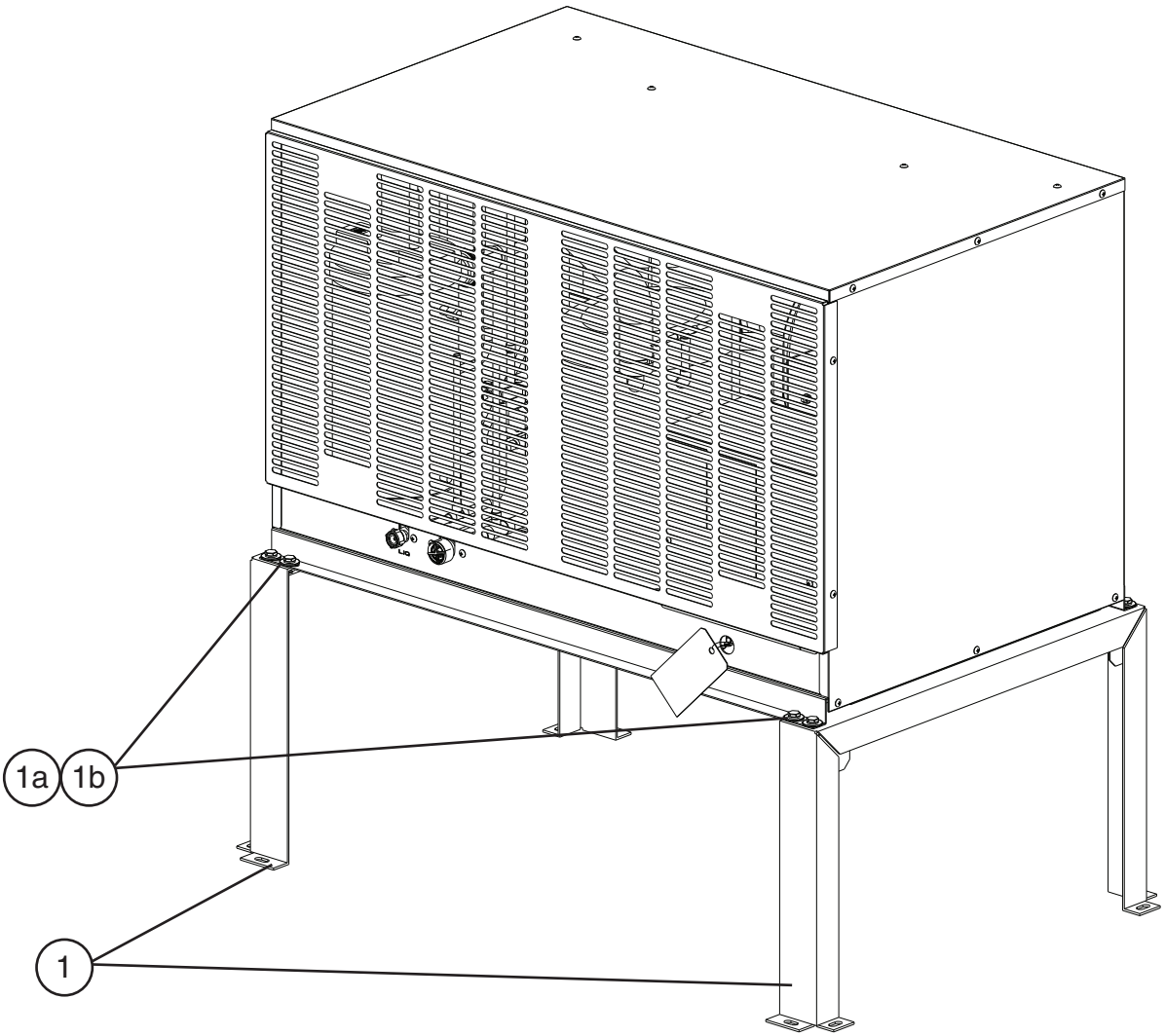

Title: C. Accessories & Labels Model: SRC-14H												
Index No.	Description	Material or Model Number	Part Number	Required Number								
				A-0 to F-0								
1	Leg		2A3166G01	2								
1a	Hex Head Bolt w/ Washer	8×16, SS	7B0230816	8								
1b	Hex Nut	M8, SS	7N12-0800	8								