Sanitizing Sink Heater

3CS-B (BALANCED) Series

3CS-3B	*3CS-6B*
3CS-4B	*3CS-9B*

REPLACEMENT PARTS LIST

HATCO 3CS-B SERIES
SANITIZING SINK HEATERS

Model Designation

3CS-XB

- 3=Three
- C=Compartment
- S=Sink Heater
- X=Kilowatts
- B=Balanced 3 Phase

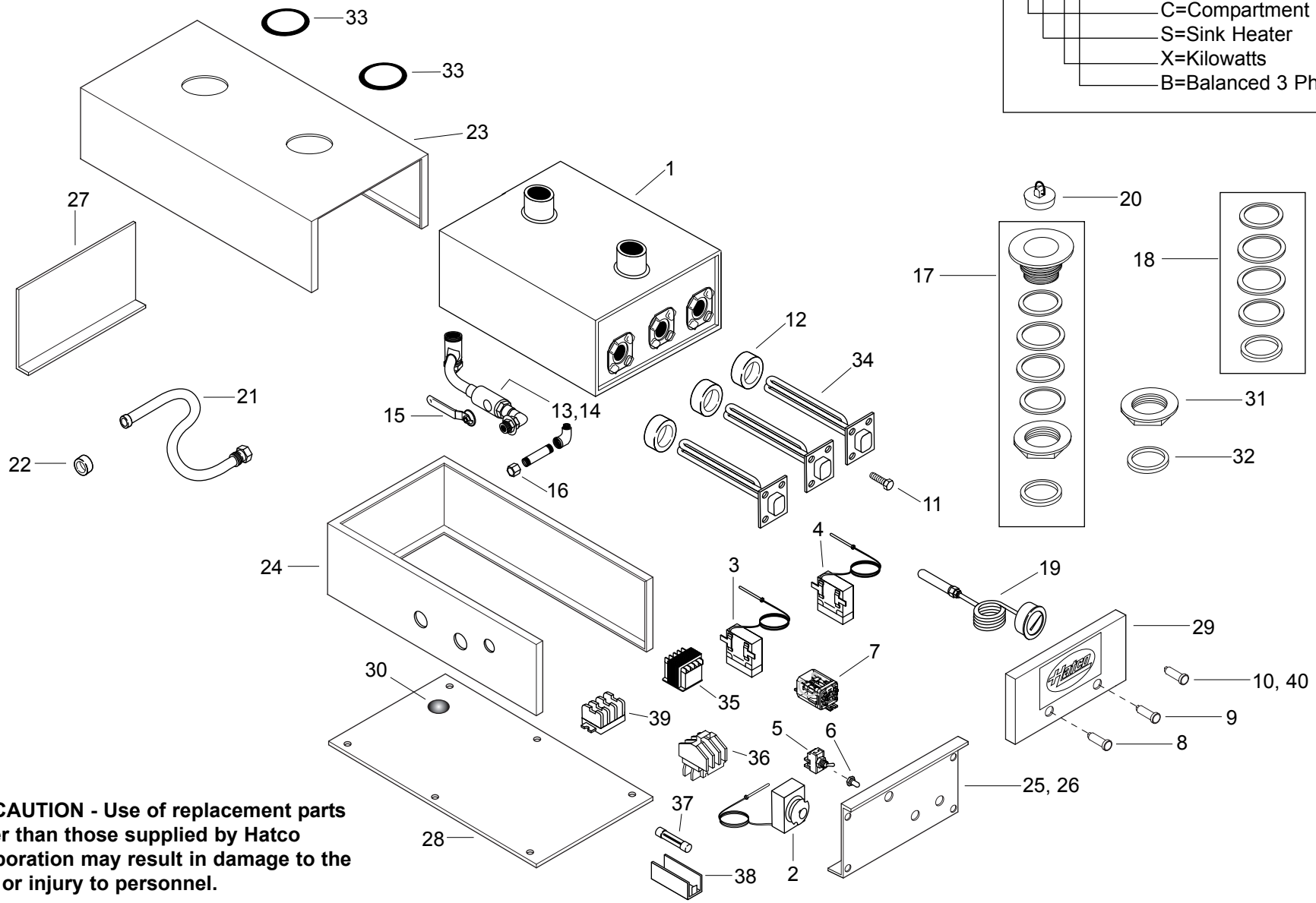

⚠ **CAUTION - Use of replacement parts other than those supplied by Hatco Corporation may result in damage to the unit or injury to personnel.**

PARTS COMMON TO ALL 3CS-B MODELS

ITEM	DESCRIPTION	PART NO.	QTY.
1	Water Tank	R01.04.006.00	1
2	Control, Thermostat 192°F (89°C)	02.16.003A.00	1
3	Overtemp, Thermostat 205°F (96°C)	02.16.004.00	1
4	At-Temp, Thermostat 175°F (79°C) (optional)	02.16.004A.00	1
5	On/Off Power Switch	R02.19.008A.00	1
6	Rubber Boot, Toggle Switch	02.20.040.00	1
7	Control Relay	R02.01.025.00	1
8	Indicator Light, Red	02.19.151.00	1
9	Indicator Light, Green	02.19.150.00	1
10	Indicator Light, Yellow	02.19.152.00	1
11	Mounting Bolts, Elements	05.04.062.00	12
12	Gasket, Element	05.06.005.00	3
13	Ball Valve, Thread Fitting (old style)	03.02.001.00	1
14	Ball Valve, Sweat Fitting (new style)	03.02.002.00	1
15	Handle, Sump Drain	03.02.001B.00	1
16	Drain Cap, Heating Compartment	R03.40.014.00	1
17	Sink Strainer Assembly Kit	R05.30.009.00	2
18	Strainer Gasket Kit	R00.05.0002.00	1†
19	Temperature Monitor (optional)	03.01.005.00	1
20	Stopper, Rubber	05.06.026.00	1
21	Flush Hose with Adaptor	05.06.010.00	1
22	Adaptor for Hose	05.06.007.00	1
23	Jacket, Painted	04.06.089.00	1
	Jacket, S.S.*	04.06.090.00	1
24	Base, Painted	04.06.113.00	1
	Base, S.S.*	04.06.114.00	1
25	Base Front, Painted	04.06.081.00	1
	Base Front, S.S.*	04.06.082.00	1
26	Base Front With Monitor Hole, Painted	04.06.083.00	1
	Base Front With Monitor Hole, S.S.*	04.06.084.00	1
27	Rear Plate, Painted	04.06.022.00	1
	Rear Plate, S.S.*	04.06.004A.00	1
28	Bottom Cover, Painted	04.06.016.00	1
	Bottom Cover, S.S.*	04.06.018.00	1
29	Front Cover For Two Indicator Lights, S.S.	04.06.073.00	1
	Front Cover For Three Indicator Lights, S.S.*	04.06.074.00	1
30	Drain Screen Plug, 1" (3 cm)	02.20.026.00	1
31	Brass Locknut	05.30.009A.00	2
32	Union Gasket	05.06.009.00	2
33	Grommets, Black Molded Rubber	05.06.008.00	2

* Not Shown

† Includes all gaskets for both strainers

Note: S.S. is an abbreviation for stainless steel.

PARTS SPECIFIC TO MODEL 3CS-3B

ITEM	DESCRIPTION	208V Three Phase	240V Three Phase	380V Three Phase	415V Three Phase	380-415V CE Three Phase	480V Three Phase
34	Heating Element (Qty. 3)	R02.06.300.00	R02.06.301.00	R02.06.452.00	R02.06.452.00	R02.06.452.00	R02.06.303.00
35	Transformer	--	---	R02.17.003.00	R02.17.002.00	R02.17.003.00	R02.17.002.00
36	Contactor (Qty. 1-2)	02.01.016.00	02.01.016.00	02.01.016.00	02.01.016.00	02.01.149.00	02.01.016.00
37	Fuse•	---	---	R02.03.001.02	R02.03.001.02	R02.03.001.02	R02.03.001.02
38	Fuse Holder	---	---	02.03.004.00	02.03.004.00	02.03.004.00	02.03.004.00
39	Terminal Block	R02.15.003.00	R02.15.003.00	R02.15.003	R02.15.003.00	R02.15.035.00	R02.15.003.00
40	Indicator Light, Blue	---	---	---	---	02.19.157.00	---
	Electrical Drawing	HS1-3578	HS1-3578	HC1-1423	HC1-1335	HS1-4698	HS1-3579

PARTS SPECIFIC TO MODEL 3CS-4B

ITEM	DESCRIPTION	208V Three Phase	240V Three Phase	380V Three Phase	415V Three Phase	380-415V CE Three Phase	480V Three Phase
34	Heating Element (Qty. 3)	R02.06.450.00	R02.06.451.00	---	---	---	R02.06.452.00
35	Transformer	--	---	---	---	---	R02.17.002.00
36	Contactor (Qty. 1-2)	02.01.016.00	02.01.016.00	---	---	---	02.01.016.00
37	Fuse•	---	---	---	---	---	R02.03.001.02
38	Fuse Holder	---	---	---	---	---	02.03.004.00
39	Terminal Block	R02.15.003.00	R02.15.003.00	---	---	---	R02.15.003.00
40	Indicator Light, Blue	---	---	---	---	---	---
	Electrical Drawing	HS1-3578	HS1-3578	---	---	---	HS1-3579

Shaded area reflects export models only.

• Fuses only sold in packs of (2).

PARTS SPECIFIC TO MODEL 3CS-6B

ITEM	DESCRIPTION	208V Three Phase	240V Three Phase	380V Three Phase	415V Three Phase	380-415V CE Three Phase	480V Three Phase
34	Heating Element (Qty. 3)	R02.06.301.00	R02.06.450.00	R02.06.303.00	R02.06.303.00	R02.06.303.00	R02.06.603.00
35	Transformer	--	---	R02.17.003.00	R02.17.002.00	R02.17.003.00	R02.17.002.00
36	Contactor (Qty. 1-2)	02.01.016.00	02.01.016.00	02.01.016.00	02.01.016.00	02.01.149.00	02.01.016.00
37	Fuse•	---	---	R02.03.001.02	R02.03.001.02	R02.03.001.02	R02.03.001.02
38	Fuse Holder	---	---	02.03.004.00	02.03.004.00	02.03.004.00	02.03.004.00
39	Terminal Block	R02.15.003.00	R02.15.003.00	R02.15.003.00	R02.15.003.00	R02.15.035.00	R02.15.003.00
40	Indicator Light, Blue	---	---	---	---	02.19.157.00	---
	Electrical Drawing	HS1-3574	HS1-3575	HC1-1423	HC1-1988	HS1-4701	HS1-3576

PARTS SPECIFIC TO MODEL 3CS-9B

ITEM	DESCRIPTION	208V Three Phase	240V Three Phase	380V Three Phase	415V Three Phase	380-415V CE Three Phase	480V Three Phase
34	Heating Element (Qty. 3)	R02.06.300.00	R02.06.301.00	R02.06.452.00	R02.06.301.00	R02.06.452.00	R02.06.303.00
35	Transformer	--	---	R02.17.003.00	R02.17.002.00	R02.17.003.00	R02.17.002.00
36	Contactor (Qty. 1-2)	02.01.016.00	02.01.016.00	02.01.016.00	02.01.016.00	02.01.149.00	02.01.016.00
37	Fuse•	---	---	R02.03.001.02	R02.03.001.02	R02.03.001.02	R02.03.001.02
38	Fuse Holder	---	---	02.03.004.00	02.03.004.00	02.03.004.00	02.03.004.00
39	Terminal Block	R02.15.003.00	R02.15.003.00	R02.15.003.00	R02.15.003.00	R02.15.035.00	R02.15.003.00
40	Indicator Light, Blue	---	---	---	---	02.19.157.00	---
	Electrical Drawing	HS1-3568	HS1-3568	HC1-1423	HC1-1335	HS1-4690	HS1-3569

Shaded area reflects export models only.

• Fuses only sold in packs of (2).

NOTES

NOTES

HATCO AUTHORIZED PARTS DISTRIBUTORS

ALABAMA
Jones McLeod Appl. Svc.
Birmingham 205-251-0159

ARIZONA
Auth. Comm. Food Equip.
Phoenix 602-234-2443
Byassee Equipment Co.
Phoenix 602-252-0402

CALIFORNIA
Industrial Electric
Huntington Beach 714-379-7100
Chapman Appl. Service
San Diego 619-298-7106
P & D Appliance
S. San Francisco 650-635-1900

COLORADO
All City Service
Denver 303-454-9500
Hawkins Commercial Appliance
Englewood 303-781-5548

DELAWARE
Food Equipment Service
Wilmington 302-996-9363

FLORIDA
Whaley Foodservice Repair
Jacksonville 904-725-7800
Nass Service Co., Inc.
Orlando 407-425-2681
B.G.S.I.
Pompano Beach 954-971-0456
Comm. Appliance Service
Tampa 813-663-0313

GEORGIA
Southeastern Rest. Svc.
Norcross 770-446-6177

HAWAII
Burney's Comm. Service, Inc.
Honolulu 808-848-1466
Food Equip Parts & Service
Honolulu 808-847-4871

ILLINOIS
Parts Town
Broadview 708-865-7278
Eichenauer Elec. Service
Decatur 217-429-4229
Midwest Elec. Appl. Service
Elmhurst 630-279-8000
Cone's Repair Service
Moline 309-797-5323

INDIANA
Comm. Parts & Service, Inc.
Indianapolis 317-545-9655

IOWA
Electric Motor Service Co.
Davenport 319-323-1823

KENTUCKY
Comm. Parts & Service, Inc.
Louisville 502-367-1788

LOUISIANA
Chandlers Parts & Service
Baton Rouge 225-272-6620

LOUISIANA (Continued)
Bana Comm. Parts, Inc.
Shreveport 318-631-6550

MARYLAND
Electric Motor Service
Baltimore 410-467-8080
GCS Service, Inc.
Silver Spring 301-585-7550

MASSACHUSETTS
Ace Service Co., Inc.
Needham 781-449-4220

MICHIGAN
Commercial Kitchen Service
Bay City 517-893-4561
Bildons Appliance Service
Detroit 248-478-3320
Midwest Food Equip. Service
Grandville 616-261-2000

MINNESOTA
GCS Service
Minneapolis 612-546-4221

MISSOURI
GCS Service, Inc.
Kansas City 816-920-5999
Commercial Kitchen Services
St. Louis 314-890-0700
Kaemmerlen Parts & Service
St. Louis 314-535-2222

NEBRASKA
Anderson Electric
Omaha 402-341-1414

NEVADA
Burney's Commercial
Las Vegas 702-736-0006

NEW JERSEY
Jay Hill Repair
Fairfield 973-575-9145
Service Plus
Flanders 973-691-6300

NEW YORK
Acme American Repairs, Inc.
Brooklyn 718-456-6544
Alpro Service Co.
Brooklyn 718-386-2515
Appliance Installation
Buffalo 716-884-7425
Northern Parts Dist.
Plattsburgh 518-563-3200
J. B. Brady, Inc.
Syracuse 315-422-9271

NORTH CAROLINA
Authorized Appliance
Charlotte 704-377-4501

OHIO
Akron/Canton Comm. Svc. Inc.
Akron 330-753-6635
Certified Service Center
Cincinnati 513-772-6600
GCS Service
Columbus 614-476-3225
Electrical Appl. Repair Service
Independence 216-459-8700

OHIO (Continued)
E. A. Wichman Co.
Toledo 419-385-9121

OKLAHOMA
Hagar Rest. Service, Inc.
Oklahoma City 405-235-2184
Krueger, Inc.
Oklahoma City 405-528-8883

OREGON
Bressie Electric Co.
Portland 503-231-7171
Ron's Service, Inc.
Portland 503-624-0890

PENNSYLVANIA
Authorized Factory Service
Coraopolis 412-262-2330
FAST Comm. Appl. Service
Philadelphia 215-288-4800
GCS Service, Inc.
Pittsburgh 412-787-1970
K & D Service Co.
Harrisburg 717-236-9039
Elmer Schultz Services
Philadelphia 215-627-5401
Electric Repair Co.
Reading 610-376-5444

RHODE ISLAND
Marshall Electric Co.
Providence 401-331-1163

SOUTH CAROLINA
Whaley Foodservice Repair
W. Columbia 803-791-4420

TENNESSEE
Camp Electric
Memphis 901-527-7543

TEXAS
City Kitchen Service Co.
Austin 512-719-4445
Stove Parts Supply
Fort Worth 817-831-0381
Armstrong Repair Service
Houston 713-666-7100
Commercial Kitchen Repair Co.
San Antonio 210-735-2811
San Antonio Rest. Equip.
San Antonio 210-824-3271

UTAH
Peterson's Commercial Parts & Svc.
Salt Lake City 801-487-3653

VIRGINIA
Daubers
Norfolk 757-855-4097
Daubers
Springfield 703-866-3600

WASHINGTON
Restaurant Appl. Service
Seattle 206-524-8200

WISCONSIN
A.S.C., Inc.
Madison 608-246-3160
A.S.C., Inc.
Milwaukee 414-543-6460

HATCO CORPORATION
P.O. Box 340500, Milwaukee, WI 53234-0500 U.S.A.
(800) 558-0607 (414) 671-6350
Parts & Service Fax (800) 690-2966 Int'l. Fax (414) 671-3976
www.hatcocorp.com

Form No. 3CS-BRP-0601 June 2001 Printed in U.S.A.