E2S

Technical Data Sheet

P/N 0453524_F

NSF® Certified

April 2017

DOE 2017
Energy Efficiency Compliant

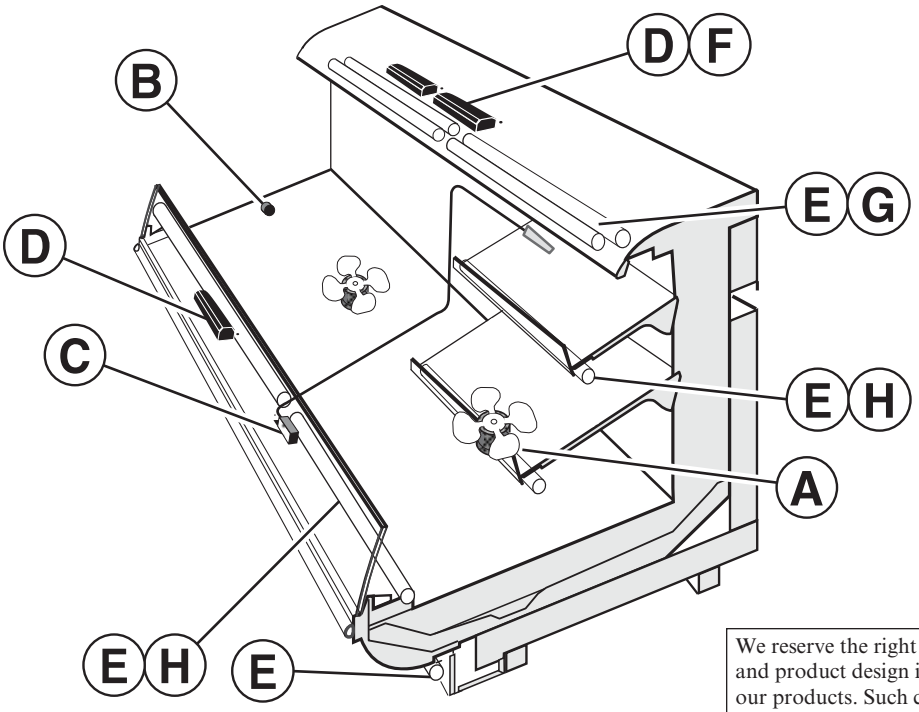

We reserve the right to change or revise specifications and product design in connection with any feature of our products. Such changes do not entitle the buyer to corresponding changes, improvements, additions or replacements for equipment previously sold or shipped.

Item	Part #	Description	Wiring Item #
Fan Assemblies and Thermostats			
A.		**7W Standard Energy Efficient** Fan Assembly	(1)
	0477654	Fan Motor, Evaporator	
	0142780	Fan Blade embossing toward motor	
B.	0411744	Standard Non-adjustable Defrost Thermostat	(2)
C.	0353949	Optional Adjustable Refrigeration Thermostat	(3)
Lamps and Ballasts			
D.		Ballast, Electronic	(4)
	0466234	2 lamps	
	0466235	3 lamps	
	0466236	4 lamps	
E.		Fluorescent Lamp *Replace with like fixtures*	(5)

Item	Part #	Description	Wiring Item #
LED Fixtures and Power Supply			
F.	0501213	Power Supply	(6)
G.		LED Canopy Fixture *Replace with like fixtures*	(7)
H.		LED Shelf Fixture *Replace with like fixtures*	(8)

Data sheet-Elite-E2S

Note: Revision F: April 2017. Updated LED energy values. Other changes marked with a bar, circle or underline.

©2017 HUSSMANN CORPORATION • BRIDGETON, MO 63044-2483 U.S.A.
U.S. & CANADA 1-800-922-1919 • MEXICO 1-800-890-2900 • WWW.HUSSMANN.COM

Spanish P/N 0531207

Engineering
Plan Views

Dimensions shown as inches and (mm).

PHYSICAL DATA	
Merchandiser Drip Pipe (in.)	1 1/2
Merchandiser Liquid Line (in.)	3/8
Merchandiser Suction Line (in.)	7/8

E2S
Meat, Delicatessen
Precut & Packaged
Produce
41 In. High

09-2005

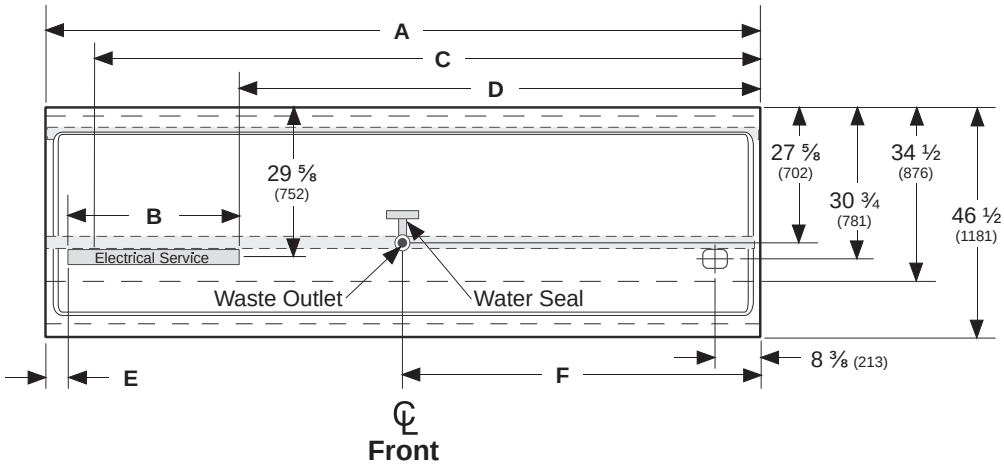

	4 ft	6 ft	8 ft	12 ft
General				
(A) Case Length *(without ends or partitions)*	48 1/8 (1222)	72 1/8 (1832)	96 1/4 (2445)	144 3/8 (3667)
NOTE: Each end and insulated partition adds 1 inch to lineup.				
Maximum O/S dimension back to front *(with bumper)*	46 1/2 (1181)	46 1/2 (1181)	46 1/2 (1181)	46 1/2 (1181)
Back of case to front of front panel	34 1/2 (876)	34 1/2 (876)	34 1/2 (876)	34 1/2 (876)
Back of case to O/S edge of front skid rail	29 3/8 (746)	29 3/8 (746)	29 3/8 (746)	29 3/8 (746)
Width of skid rail	4 1/2 (114)	4 1/2 (114)	4 1/2 (114)	4 1/2 (114)
RH end of case to outside edge of external support	1 3/8 (34)	1 3/8 (34)	1 3/8 (34)	1 3/8 (34)
Distance between edges of external support and center support	NA	28 1/2 (724)	40 1/2 (1029)	40 1/2 (1029)
Distance between edges of center supports	NA	NA	NA	44 (1118)
Distance between edges of external supports	37 (940)	NA	NA	NA
Stub-up area between front skid rail and front panel	5 3/4 (146)	5 3/4 (146)	5 3/4 (146)	5 3/4 (146)
Electrical Service *(Electrical Field Wiring connection point)*				
(B) Length of electrical raceway	18 3/8 (467)	18 3/8 (467)	37 (940)	37 (940)
(C) RH End of case to center of farthest knockout	36 5/8 (930)	60 3/4 (1543)	84 3/4 (2153)	132 3/4 (3372)
Back of case to center of end knockout	29 5/8 (752)	29 5/8 (752)	29 5/8 (752)	29 5/8 (752)
(D) RH End of case to RH end of raceway	27 5/8 (702)	51 5/8 (1311)	57 1/4 (1454)	105 1/8 (2670)
(E) LH End of case to LH end of raceway	2 1/8 (54)	2 1/8 (54)	2 (51)	2 1/4 (57)
Waste Outlet				
(F) RH End of case to the center of waste outlet	24 1/4 (616)	24 1/4 (616)	24 1/2 (622)	72 1/4 (1834)
LH End of case to the center of waste outlet	23 7/8 (606)	47 7/8 (1216)	71 3/4 (1822)	72 1/8 (1832)
Back O/S of case to center of waste outlet	27 5/8 (702)	27 5/8 (702)	27 5/8 (702)	27 5/8 (702)
Water Seal				
Edge of water seal to center of waste outlet	4 (102)	4 (102)	4 (102)	4 (102)
Outside diameter of the drip pipe	1 1/2 (38)	1 1/2 (38)	1 1/2 (38)	1 1/2 (38)
NOTE: Water seal outlet must clear front skid rail; water seal rotation in forward direction only due to low base.				
Refrigeration Outlet				
Back of case to center of refrigeration outlet	30 3/4 (781)	30 3/4 (781)	30 3/4 (781)	30 3/4 (781)
RH end of case to center of refrigeration outlet	8 3/8 (213)	8 3/8 (213)	8 3/8 (213)	8 3/8 (213)

Elite E2S
Meat, Delicatessen
Precut & Packaged Produce

DOE 2017 Energy Efficiency Compliant — Hussmann refrigerated merchandisers configured for sale for use in the United States meet or surpass the requirements of the DOE 2017 energy efficiency standards.

Dimensions shown as in. & (mm).

E2S

See Page 11 for shelf arrangement.

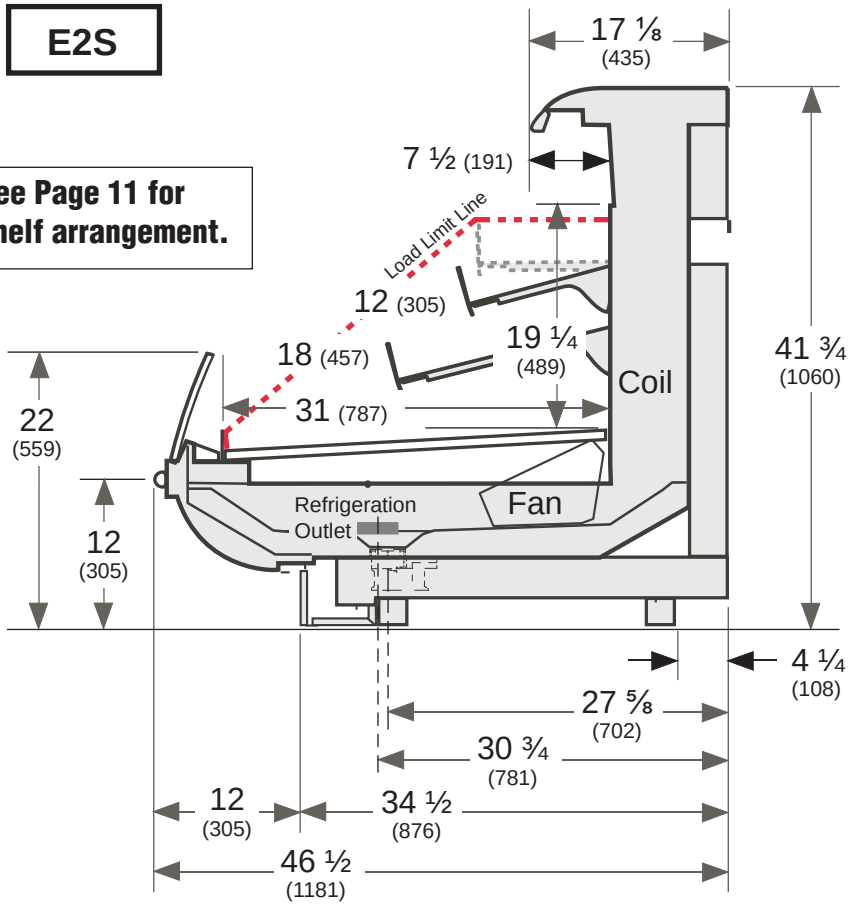

Estimated Charge **			E2S
4 ft	0.9 lb	14 oz	0.4 kg
6 ft	1.8 lb	29 oz	0.8 kg
8 ft	1.9 lb	30 oz	0.9 kg
12 ft	2.9 lb	46 oz	1.3 kg

**This is an average for all refrigerant types. Actual refrigerant charge may vary by approximately half a pound (8 oz/0.2 kg).

NSF Certification
This merchandiser model is manufactured to meet NSF/ANSI (National Sanitation Foundation) Standard #7 requirements for construction, materials & cleanability.

REFRIGERATION DATA

Note: This data is based on store temperature and humidity that does not exceed 75 (°F) and 55% R.H.

	E2S§ Meat	E2S§ Deli
Discharge Air (°F)	25	28
Evaporator (°F)	18	21
Unit Sizing (°F)	16	19

§ Average evaporator temperature shown. Use dew point for high glide refrigerants for unit sizing. Care should be taken to use the dew point in PT tables for measuring and adjusting superheat. Adjust evaporator pressure as needed to maintain discharge air temperature shown.

Btu/hr/ft		
Parallel	819	779
Conventional	899	849

DEFROST DATA

Frequency (hr)	6
Defrost Water	8 lb/ft/day

(± 15% based on case configuration and product loading).

OFFTIME	E2S
Temp Term (°F)	48
Failsafe (minutes)	**40**

ELECTRIC OR GAS	Not Recommended

Standard Defrost Thermostat
Close on rise: close 48°F – open 33°F

CONVENTIONAL CONTROLS

Low Pressure Backup Control CI/CO**

E2S	Meat	Deli
Temp (°F)	11 / 6	14 / 4

Indoor Unit Only, Pressure Defrost Termination (Temp °F)* 48°F

*Use a Temperature Pressure Chart to determine PSIG conversions.

Electrical Data

	4 ft	6 ft	8 ft	12 ft
Number of Fans — 7W	**1**	**2**	**2**	**3**
Number of Fans — 7W (Export)	**1**	**2**	**2**	**3**

(Export: 230V 50 hz shown)

	Amperes				Watts			
Merchandiser	**4 ft**	**6 ft**	**8 ft**	**12 ft**	**4 ft**	**6 ft**	**8 ft**	**12 ft**
Fans								
Energy Efficient (120V 60 Hz)	0.19	0.38	0.38	0.57	14	28	28	42
Export (230V 50Hz)	0.28	0.56	0.56	0.84	42	84	84	126
Cycling Anti-sweat Heaters	NA							
Minimum Circuit Ampacity								
With Energy Efficient Fans (120V 60 Hz)	0.39	0.58	0.58	0.77				
With Export Fans (230V 50Hz)	0.48	0.76	0.76	1.04				
Maximum Over Current Protection	20	20	20	20				
Export (230V 50Hz)	15	15	15	15				
Electric Defrost Heaters (208V 1Ph)	NA							
Standard Lighting (T-8 fluorescent)								
2 Rows Canopy	0.51	1.01	1.01	1.52	66	122	122	183

ONLY LIGHTING CONFIGURATIONS THAT ARE COMPLIANT WITH THE U.S. DEPT. OF ENERGY (DOE) 2017 REGULATION ARE AVAILABLE FOR SALE FOR USE IN THE U.S.A.

Optional Lighting (T-8 fluorescent)								
1 Row Rail Lights	0.51	0.51	0.51	0.76	62	62	62	96
1 Row Ledge Lights	0.51	0.51	0.51	0.76	62	62	62	96
Optional Shelf Lighting (T-8 fluorescent)								
1 Row of Shelves	0.51	0.51	0.51	0.76	62	62	62	96
2 Rows of Shelves	0.51	1.01	1.01	1.52	66	122	122	183

Please note: some combinations of fluorescent lights on this case model may not be compliant with DOE 2017 and may not be available to order in the US and Canada. More lighting options are available with LED lights. The Hussmann Product Configurator will not allow lighting options that do not comply with the DOE 2017 standards.

(CONTINUED)

Product Data

Recommended Usable Cube [1] ***(Cu Ft/Ft)***	2.19 ft^3/ft (0.20 m^3/m)
AHRI Total Display Area [2] ***(Sq Ft/Ft)***	2.66 ft^2/ft (0.81 m^2/m)
Shelf Area [3] ***(Sq Ft/Ft)***	4.08 ft^2/ft (1.24 m^2/m)

[1] AHRI Refrigerated Volume less shelving and other unusable space: Refrigerated Volume/Unit of Length, ft^3/ft [m^3/m]
[2] Computed using AHRI 1200 standard methodology: Total Display Area, ft^2 [m^2]/Unit of Length, ft [m]
[3] Shelf surface area is composed of bottom deck plus standard shelf complement, as shown in the Hussmann ***Product Reference Guide***. The standard shelf complement for this model is (1) row of 12-inch shelves and (1) row of 18-inch shelves.

ESTIMATED SHIPPING WEIGHT [4]

Case					**Solid End**
	4 ft	***6 ft***	***8 ft***	***12 ft***	***(each)***
lb *(kg)*	600 (272)	850 (386)	1000 (454)	1200 (544)	50 (23)

[4] Actual weights will vary according to optional kits included.

Electrical Data (Continued)

	Amperes				**Watts**			
	4 ft	**6 ft**	**8 ft**	**12 ft**	**4 ft**	**6 ft**	**8 ft**	**12 ft**
EcoShine II Canopy								
EcoShine II	0.16	0.26	0.32	0.48	19.3	31.6	38.6	58.0
EcoShine II HO	0.22	0.33	0.44	0.66	26.5	39.5	53.0	79.4
EcoShine II Rail Light —1 Row	0.08	0.12	0.16	0.25	9.9	14.1	19.8	29.7
EcoShine II Shelves								
1 Row of Shelves	0.08	0.12	0.16	0.25	9.9	14.1	19.8	29.7
2 Rows of Shelves	0.16	0.33	0.44	0.66	26.5	39.5	53.0	79.4

120V Lighting Circuit Total = Standard Lighting + Total Optional Lighting + Optional Shelf Lighting
120V LED Lighting Circuit Total = Canopy Lighting + Shelf Lighting + Optional Rail Lighting
230V Lighting Circuit Total = Multiply 120V Lighting Circuit Total by 0.52

Fan Wiring Offtime Defrost

2 & 3 Fans

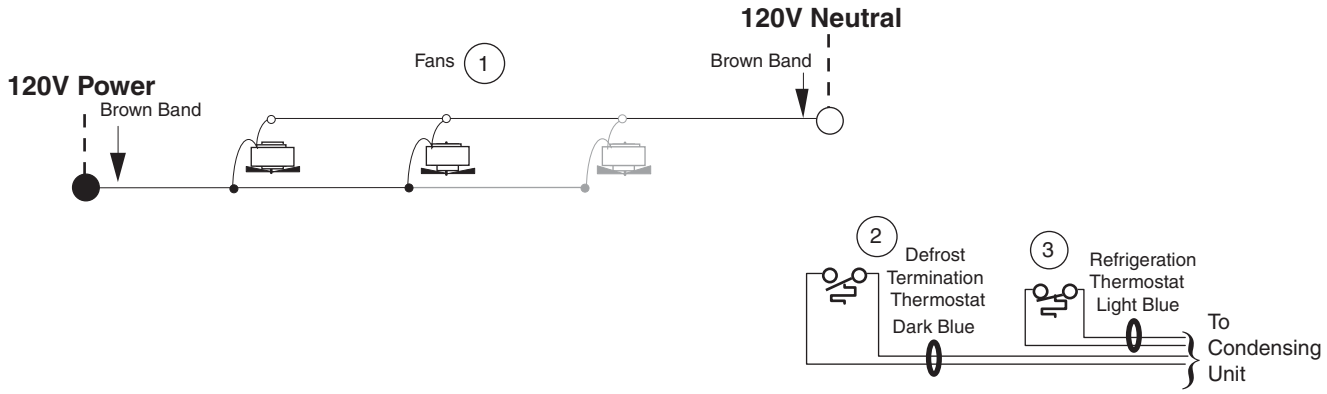

Shelf Lighting

Optional Shelf Harness and Light Circuits for One Row of Shelves

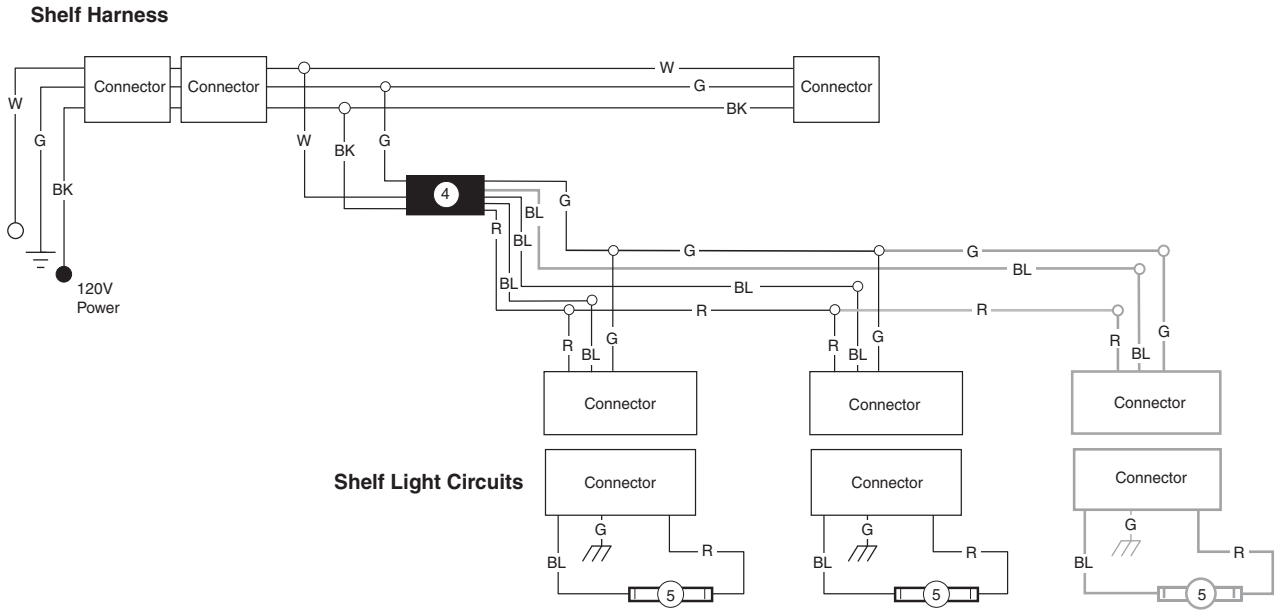

WARNING

All components must have mechanical ground, and the merchandiser must be grounded.

Circled Numbers = Parts List Item Numbers

Grayed components in 12 foot models only.

R = Red Y = Yellow G = Green BL = Blue BK = Black W = White

● = 120V Power ○ = 120V Neutral ⏚ = Field Ground ⏚ = Case Ground

Light Circuits

Standard Lighting 1 Row Canopy

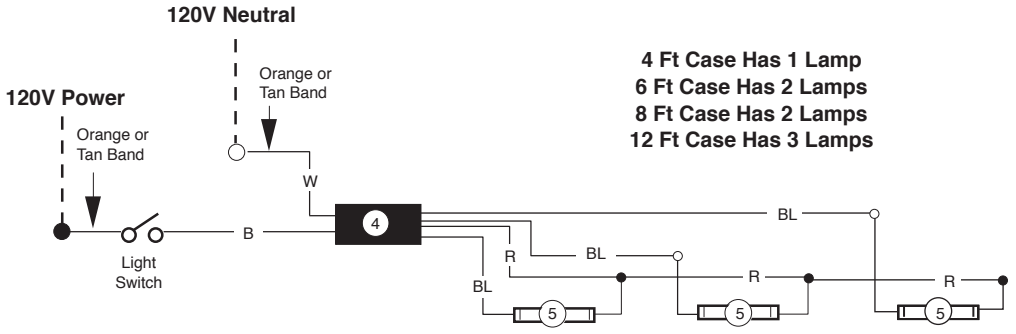

Optional Lighting: 1 Row Ledge or 1 Row Rail

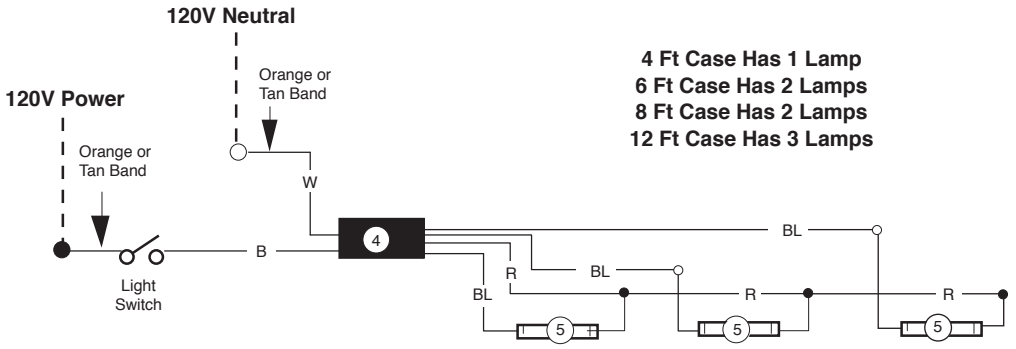

WARNING

All components must have mechanical ground, and the merchandiser must be grounded.

Circled Numbers = Parts List Item Numbers

R = Red Y = Yellow G = Green BL = Blue BK = Black W = White

● = 120V Power ○ = 120V Neutral ⏚ = Field Ground ⏚ = Case Ground

EcoShine II LED Canopy Lighting – 2 Row

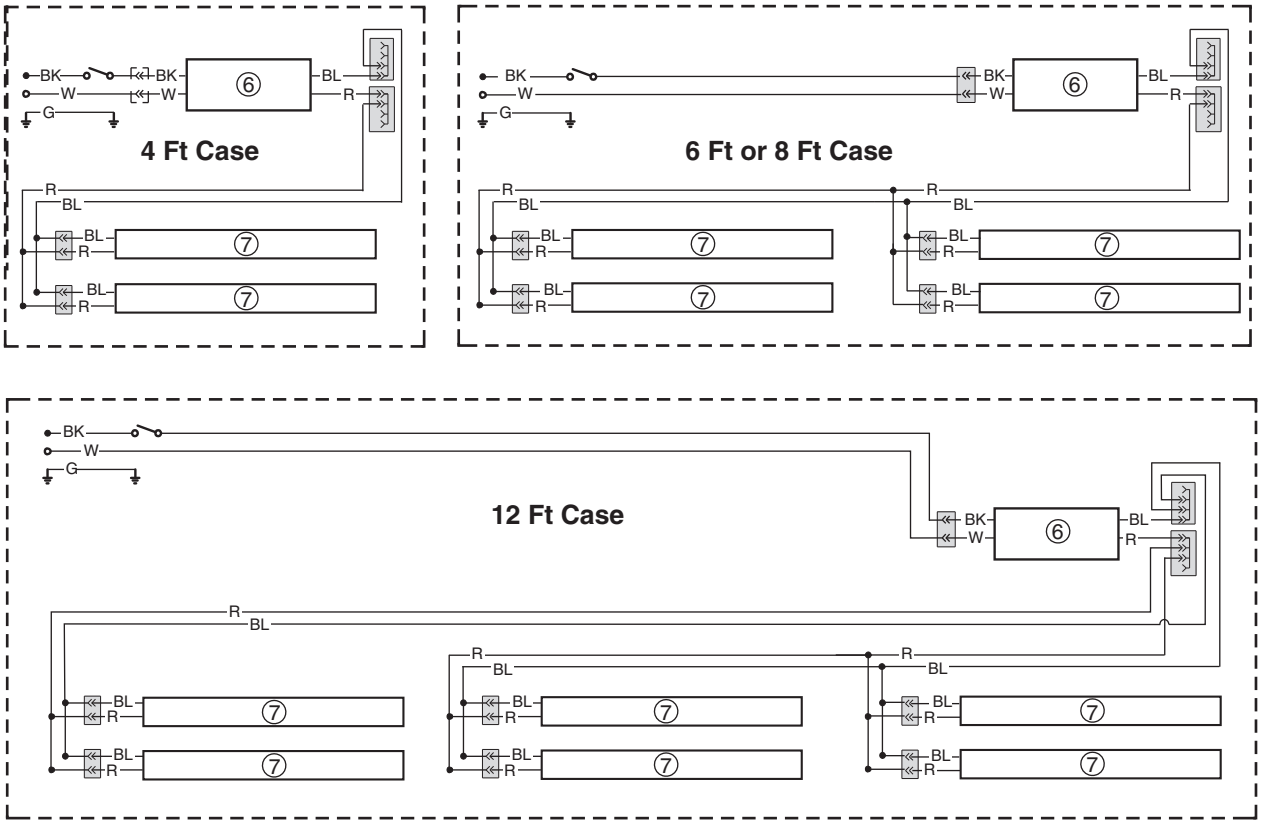

WARNING

All components must have mechanical ground, and the merchandiser must be grounded.

Circled Numbers = Parts List Item Numbers

R = Red Y = Yellow G = Green BL = Blue BK = Black W = White

● = 120V Power ○ = 120V Neutral ⏚ = Field Ground ⏚ = Case Ground

Optional Shelf Harness and LED Light Circuits for Two Rows of Shelves

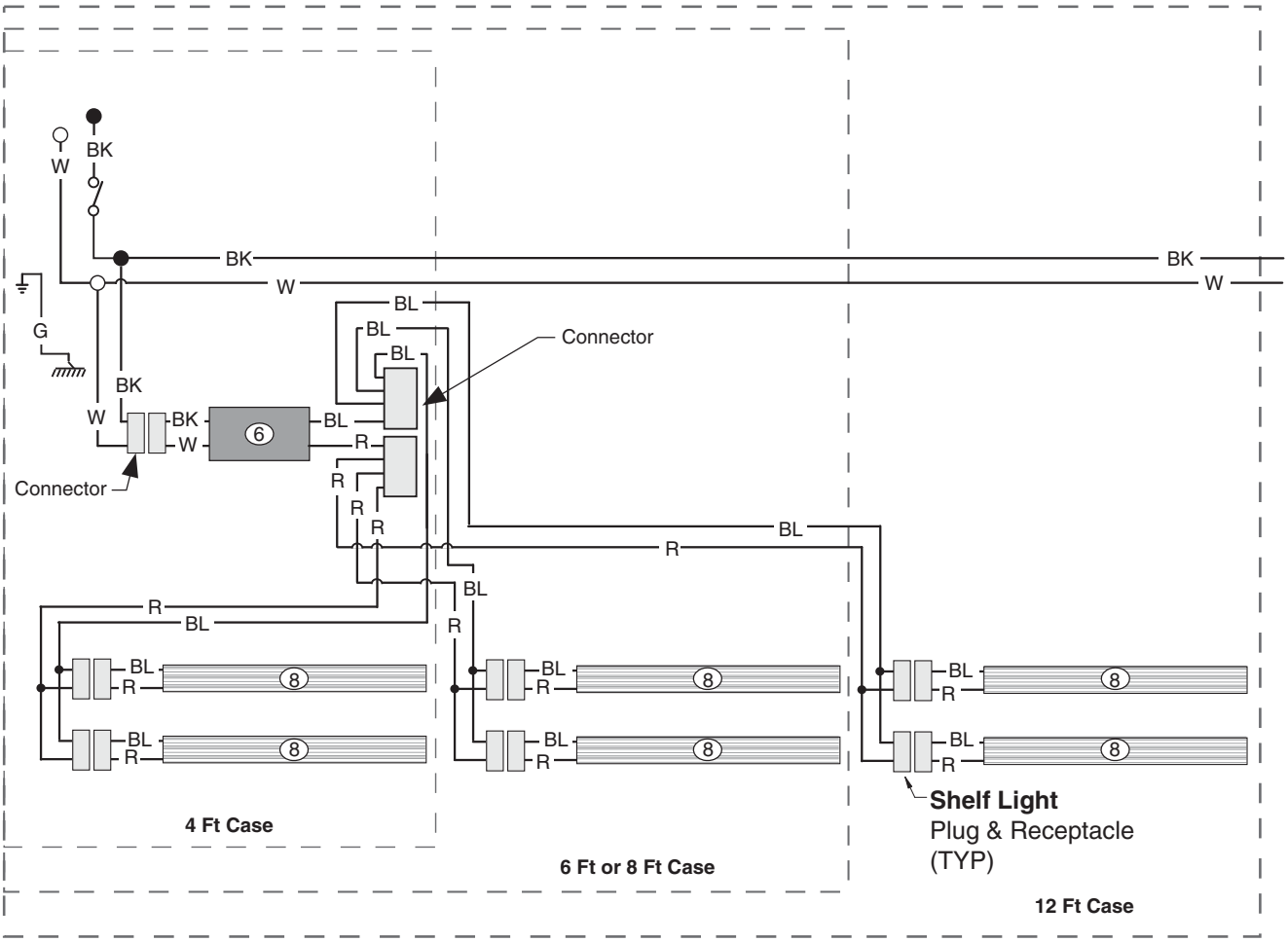

WARNING

All components must have mechanical ground, and the merchandiser must be grounded.

Circled Numbers = Parts List Item Numbers

R = Red Y = Yellow G = Green BL = Blue BK = Black W = White

● = 120V Power ○ = 120V Neutral ⏚ = Field Ground ⏚ = Case Ground

EcoShine II LED Rail Lighting – 1 Row

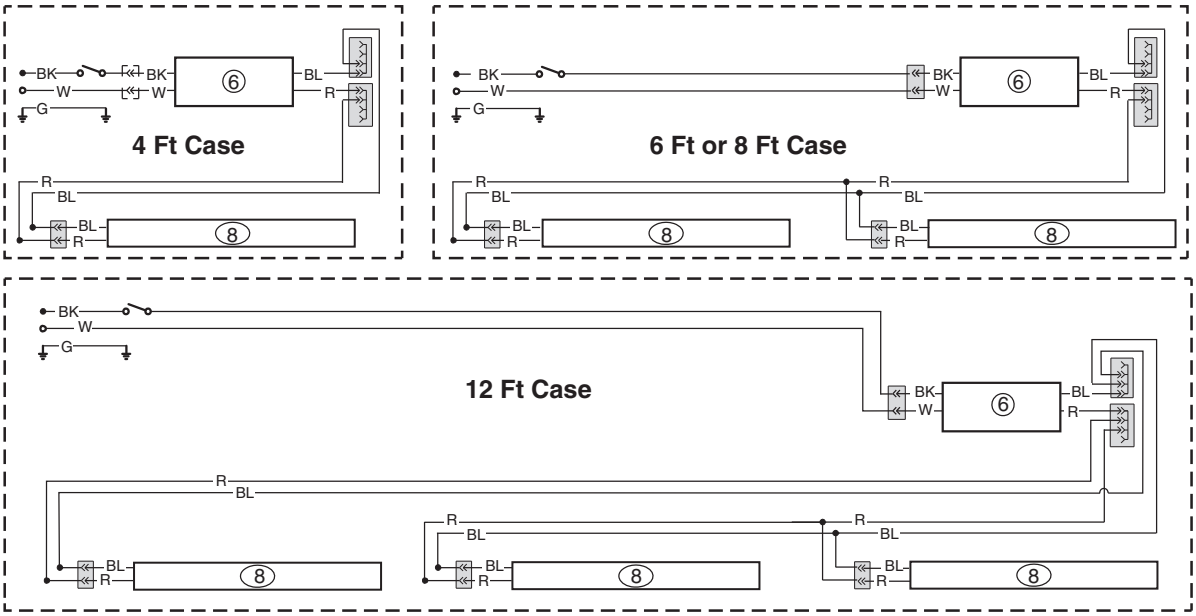

WARNING

All components must have mechanical ground, and the merchandiser must be grounded.

Circled Numbers = Parts List Item Numbers

R = Red Y = Yellow G = Green BL = Blue BK = Black W = White

● = 120V Power ○ = 120V Neutral ⏚ = Field Ground ⏚ = Case Ground

SHELF CONFIGURATION

This merchandiser is designed for two shelves.

This illustration shows recommended shelf depth and shelf angle for the two locations.

It is critical to case performance that no product, shelf or stop extend beyond the load limit, as shown in this illustration. This configuration supports the air curtain and provides optimal case performance.
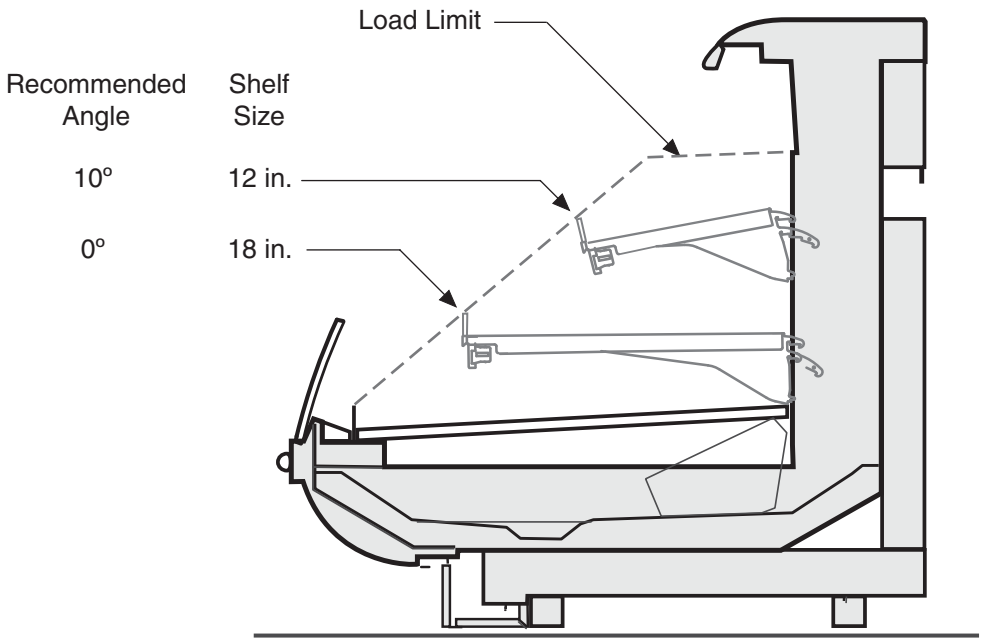
Check with Hussmann engineering before using a different configuration.