INSINGER
MACHINE COMPANY
6245 State Rd. Tel. 215-624-4800
Philadelphia
PA 19135-2996 FAX: 215-624-6966

TECHNICAL MANUAL

FOR

TRAYWASHER
TRAC 878

maintenance

FILE: \MANUL\VP\TRAC878

TRAC 878 TRAYWASHER

INTRODUCTION

Purpose
The purpose of this technical manual is to provide installation, operation, cleaning and maintenance directions.

A section is provided for replacement parts.

Scope
This manual contains all pertinent information to assist in the proper installation, operation, cleaning, maintenance, and parts ordering for the Insinger TRAC878 traywasher.

The **installation instructions** are intended for qualified equipment installers. The **operation and cleaning instructions** are intended for the daily users of the equipment. The **maintenance and parts sections** are intended for qualified service and/or maintenance technicians. Replacement parts may be ordered directly from our factory or from your local Insinger Authorized Service Agency. You can speak to the **Insinger Technical Services Department, 800/344-4802**, or e-mail us at **service@insingermachine.com**. When calling for warranty information or replacement parts please provide the model and serial number of your Insinger Equipment. These important numbers should be noted in this manual on the spaces provided on the opening page.

Surefire™ Start-up & Check-out Program
Insinger is proud to offer our exclusive Surefire™ Start-up & Check-out Program to our commercial customers. This service is included in the purchase price of your new Insinger dishwasher. We will provide an authorized factory service technician for the initial start-up of your new Insinger dishwasher to ensure it is running at optimum levels from the very first pass. Please call the factory or your local Insinger Sales Representative to schedule this service.

NSF 3-2003 requirements for detergent and chemical sanitizer dispensers.
This machine must be operated with detergent in the integral detergent dispensing system to insure proper washing.

Intended use
The Insinger traywasher TRAC 878 may only be used for cleaning plates, cups, dishes, cutlery and similar restaurant ware and commercial catering.

Any change in design or use of the dishwasher carried out without the written permission of Insinger, will lead to warranty nullification.

If damage is caused to the dishwasher due to failure to observe the instructions given in this manual, no claims under the warranty agreement can be submitted to Insinger Machine Company.

Safety Instructions
Make sure that you have read and understood the operating instructions before you start to use the dishwasher. The Insinger customer service department can tell you how to operate the washer and how it works.

Definitions
Throughout this guide you will find the following terms: WARNING, CAUTION, & NOTE.

WARNING indicates potential physical danger.
CAUTION indicates potential equipment damage.
NOTE indicates helpful operating hints or tips.

You will visually be able to identify each as shown below:

WARNING:

Indicates potential physical danger.

CAUTION:

Indicates potential equipment damage.

NOTE:

Indicates helpful operating hints or tips.

Insinger

Item #_____

TRAC 878
AUTOMATIC TRIPLE TANK TRAY WASHER

CSI - 11400

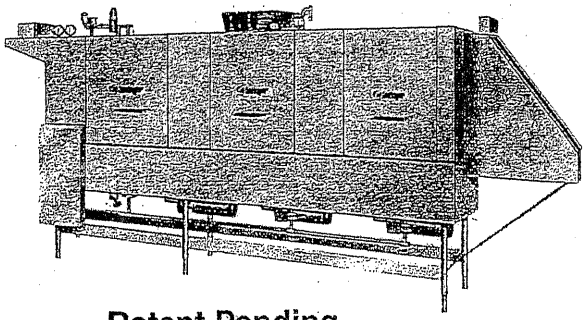

Patent Pending

DESIGN

Automatic conveyor triple tank tray washer with recirculating prewash, wash, and rinse and final fresh water rinse. Capacity is up to 878 trays per hour (based on a 15" tray). Designed for left or right hand conveyor feed, as specified.

STANDARD EQUIPMENT

- Tank heat: 16 KW (total) electric immersion heaters or steam injectors.
- Capillary thermometers for prewash, wash and rinse tanks.
- In-line thermometer for final rinse.
- Vacuum breakers on all incoming water lines.
- Manifold cleanout brush.
- Inspection doors.
- S/S frame, legs, and feet.
- SureFire™ Start-Up and Check-Out Service.
- Automatic tank fill.
- Vents with adjustable dampers.
- Low water protection.
- Detergent connection provision.
- Single point electrical connection for motors, controls, and tank heaters.
- Top mounted NEMA 4X control enclosure.
- Simplified scrap screen design.
- Door safety switches.
- Standard frame TEFC motors.
- Tray unload table.

OPTIONAL ACCESSORY EQUIPMENT

- ☐ Stainless steel coil tank heat
- ☐ Pressure reduction valve and line strainer
- ☐ Steam booster
- ☐ Electric booster
- ☐ Security package
- ☐ S/S front enclosure panel
- ☐ Insulated hood and doors
- ☐ Tray Dryer

UL NSF

Insinger

6245 State Road
Philadelphia, PA 19135-2996
215-624-4800
215-624-6966 FAX
800-344-4802
www.insingermachine.com

SUREFIRE START-UP & CHECK-OUT SERVICE

INSTALLATION AND LAYOUT DETAIL

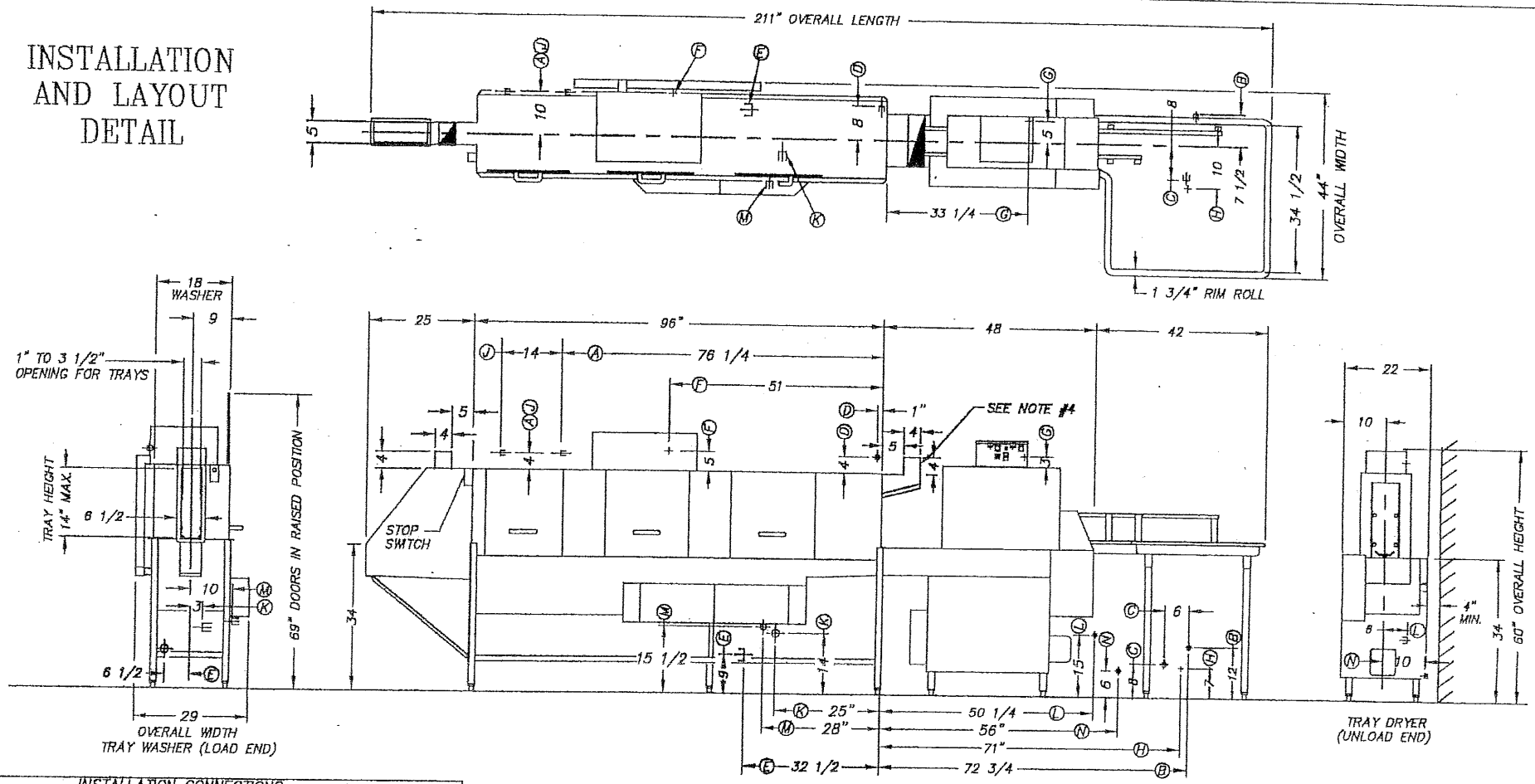

LEFT TO RIGHT FEED

INSTALLATION CONNECTIONS		
LTR	DESCRIPTION	SIZE
A	HOT WATER TO AUTO FILL – 110° F	1/2 FIPS
B	HOT WATER TO STEAM BOOSTER – 110°/140° F	1/2 FIPS
C	HOT WATER TO ELECTRIC BOOSTER – 110°/140° F	1/2 FIPS
D	HOT WATER TO FINAL RINSE – 180° F	1/2 FIPS
E	DRAIN CONNECTION – COMMON	1 1/2 FIPS
F	ELECT. SERVICE – WASHER HTRS./MTRS.	16KW + 5.6HP
G	ELECT. SERVICE – DRYER	10 HP
H	ELECT. SERVICE – BOOSTER 40°/70° RISE	24/36 KW
J	COLD WATER – PW TEMPERING	1/2 FIPS
K	STEAM TO TANKS	3/4 FIPS
L	STEAM TO STEAM BOOSTER (40° OR 70°)	1/2 OR 1"FIPS
M	CONDENSATE RETURN – COILS ONLY	1/2 FIPS
N	CONDENSATE RETURN – STEAM BOOSTER	1/2 FIPS

NOTES:

1. ELECTRICAL VOLTAGE: 208V–3PH–60HZ (PLEASE SPECIFY)
2. TOTALLY ENCLOSED MOTORS FURNISHED.
3. STAINLESS STEEL FRAME, LEGS & TRAY UNLOAD TABLE FURNISHED.
4. VENTS 4 x 12 (500 CFM) & 4 x 5 (50 CFM) WITH ADJUSTABLE DAMPERS FURNISHED AT ENDS OF WASHER.

TRAC 878
INSULATED TRAY WASHER W/ DRYER

Insinger
Philadelphia, PA 19135
(215) 624-4800
FAX (215) 624-6966

DRWN: GP 8.24.01	SCALE	DWG. NO.	REV
REV: – –	1/2" = 1'	878–D–LH	–
FILE: STD/878–D–LH			

INSTALLATION AND LAYOUT DETAIL

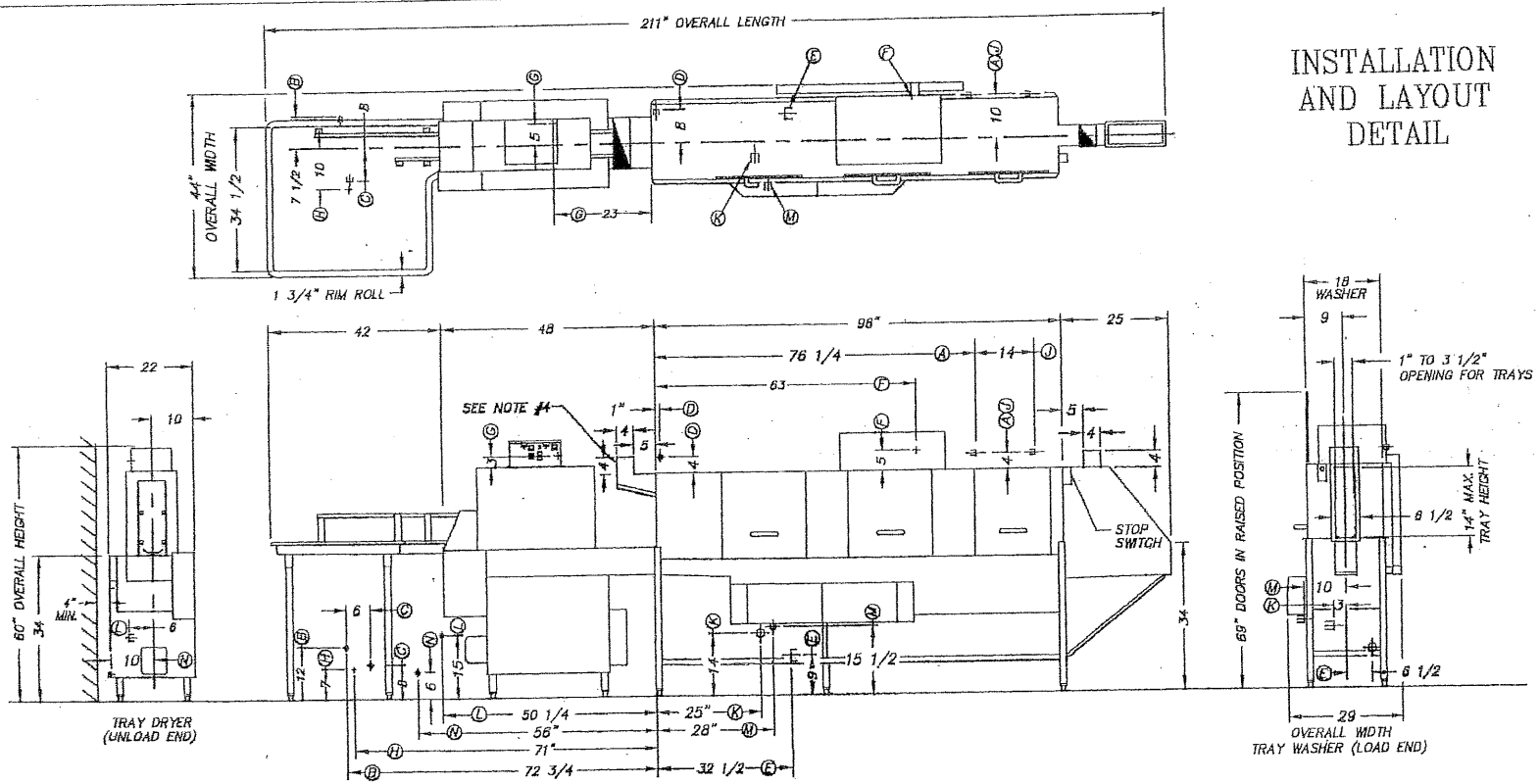

RIGHT TO LEFT FEED

INSTALLATION CONNECTIONS		
LTR	DESCRIPTION	SIZE
A	HOT WATER TO AUTO FILL - 110° F	1/2 FIPS
B	HOT WATER TO STEAM BOOSTER - 110°/140° F	1/2 FIPS
C	HOT WATER TO ELECTRIC BOOSTER - 110°/140° F	1/2 FIPS
D	HOT WATER TO FINAL RINSE - 180° F	1/2 FIPS
E	DRAIN CONNECTION - COMMON	1 1/2 FIPS
F	ELECT. SERVICE - WASHER HTRS./MTRS.	16KW + 5.6HP
G	ELECT. SERVICE - DRYER	10 HP
H	ELECT. SERVICE - BOOSTER 40°/70° RISE	24/36 KW
J	COLD WATER - RW TEMPERING	1/2 FIPS
K	STEAM TO TANKS	3/4 FIPS
L	STEAM TO STEAM BOOSTER (40° OR 70°)	1/2 OR 1" FIPS
M	CONDENSATE RETURN - COILS ONLY	1/2 FIPS
N	CONDENSATE RETURN - STEAM BOOSTER	1/2 FIPS

NOTES:

1. ELECTRICAL VOLTAGE: 208V-3PH-60HZ (PLEASE SPECIFY)
2. TOTALLY ENCLOSED MOTORS FURNISHED.
3. STAINLESS STEEL FRAME, LEGS & TRAY UNLOAD TABLE FURNISHED.
4. VENTS 4 x 12 (500 CFM) & 4 x 5 (50 CFM) WITH ADJUSTABLE DAMPERS FURNISHED AT ENDS OF WASHER.

TRAC 878
INSULATED TRAY WASHER W/ DRYER

Insinger
Philadelphia, PA 19135
(215) 624-4800
FAX (215) 624-6966

DRWN: GP 8.24.01	SCALE	DWG. NO.	REV
REV: - -	1/2" = 1'	878-D-RH	-
FILE: STD/878-D-RH			

AutoQuotes
1M 08/01 PRINTED IN USA

use, abuse, misapplication, tampering, improper installation or failure to follow maintenance and operation procedures, fire, flood, acts of God or improper maintenance or service, or for improper operation or failure to follow normal operating instructions (as set out in the TECH MANUAL) or failure as a result of the aforestated.

Examples of the aforementioned, but without limitations, are: damage to exterior or interior finish as a result of the above, use with utility service other than that designated on the rating plate, improper connection to utility service, inadequate or excessive water pressure, corrosion from chemicals dispensed in excess of recommended concentrations, failure of electrical components doe to connection of chemical dispensing equipment installed by others, leaks or damage resulting from such leaks as made by installer including those at machine table connections or by connections of chemical dispensing equipment installed by others, failure to comply with local building codes, damage caused by labor dispute.

Insinger is not responsible nor liable for any conditions of erosion or corrosion caused by corrosive detergents, acids, lye or other chemicals used in the washing and/or cleaning process.

THIS WARRANTY IS THE ONLY WARRANTY APPLICABLE TO INSINGER PRODUCTS AND IS EXPRESSLY IN LIEU OF ALL OTHER EXPRESS OR IMPLIED WARRANTIES, INCLUDING ANY IMPLIED WARRANTY OF MERCHANTABILITY OR FITNESS FOR A PARTICULAR PURPOSE, AND ANY OTHER OBLIGATION ON THE PART OF INSINGER. THE REMEDY CONTAINED IN THIS WARRANTY IS THE SOLE REMEDY FOR ANY DEFECT FOUND TO EXIST IN AN INSINGER PRODUCT AND ALL OTHER DAMAGES ARE EXCLUDED, INCLUDING ANY LIABILITY FOR INCIDENTAL OR CONSEQUENTIAL DAMAGE.

Insinger does not authorize any person or company to assume for it any other obligation or liability in connection with this warranty or for any sale, installation, use, removal, return or replacement of its equipment; and no such representations are binding on Insinger.

THIS LIMITED WARRANTY SUPERSEDES ALL OTHER EXPRESS WARRANTIES, IMPLIED WARRANTIES OF MERCHANTABILITY AND FITNESS OR LIMITED WARRANTIES AS OF JANUARY 1, 1993.

SERVICE NETWORK LISTING

ALABAMA

Don Vinson Service
345 Hunter Loop Rd.
Montgomery, AL 36108-1824
334.265-6050

Greene=s Service Company
3515 Spann St.
Harvest, AL 35749
256.859-1816

Jones-McLeod Appliance Service
1616 7th Avenue, North
Birmingham, AL 35203
205.251-0159
205.322-1440 (fax)
800.821-1150
www.jones-mcleod.com

Total Equipment Service Co.
2302 3rd St.
Attala, AL 37954
256.538-0261

ALASKA

J & J Service
5001 Eagle St.
Anchorage, AK 99503
907.561-1060

ARIZONA

Commercial Food Equipment
2010 E. University Drive #23
Tempe, AZ 85281
480.927-9262
480.927-9266 (fax)

ARKANSAS

Bromley Parts and Service, Inc.
806 Izard St.
Little Rock, AR 72201
501.374-0281
501.661-0223 (fax)
800.482-9209
www.bromleyparts.com

Scott Service Co., Inc.
7123 I-30, Suite 51
Little Rock, AR 72209
501.562-1863
501.562-2308

CALIFORNIA

Chapman Appliance Service
1784 San Diego Ave.
San Diego, CA 92110
619.298-7106
619.298-7591 (fax)

Commercial Appliance
165 Commerce Circle, Suite B
Sacramento, CA 95815
916.567-0203
916.567-0324 (fax)
800.464-2222
www.commercialappliance.com

Magna Mechanical[1]
724 Ave. B, Suite A
National City, CA 91950
619 239-8008

Ridge Electric Motor Company
1235 G St.
Fresno, CA 93706
209.268-5031

Sterling Service
664 W. Hawthorne St.
Glendale, CA 91204-1002
818.243-1234
818.243-4021 (fax)
800.396-0010
www.sterlingsrv.com

P&D Appliance
100 S. Linden Ave
South San Francisco, CA 94080
800-424-1414
650-635-1900
650-635-1919 (fax)

P&D Appliance
4220 "C" Roseville Rd
North Highlands, CA 95660
800-824-7219
916-974-2772
916-974-2774 (fax)

COLORADO

General Parts
4910 Fox Street, Unit F
Denver, CO 80239
303.373.2714
303.373.2724 (fax)

General Parts
Colorado Springs, CO 80901
303.373.2714

General Parts
Fort Collins, CO 80535
303.373.2714

Metro Appliance Service
1640 S. Broadway
Denver, CO 80210
303.778-1126
303.778-0268 (fax)
800.525-3532
www.metroapplianceservice.com

Sammons Refrigeration
2938 Janitell Rd.
Colorado Spring, CO 80906
719.538-9165
719.538-9170 (fax)

CONNECTICUT

A-Tech Service
161 San Rico Dr.
Manchester, CT 06045
860.649-6627
860.649-7882 (fax)
800.832-8324

DELAWARE

Insinger Machine Company
6245 State Road
Philadelphia, PA 19135
215.624-4800
215.624-6966 (fax)
800.344-4802
www.insingermachine.com

DISTRICT of COLUMBIA

Equipment Engineering Co, Inc.
7573 Gary Road
Manassas, VA 22110
703.631-1575
703.369-2082 (fax)

FLORIDA

A.L.T. Service Company
5621 Crawfordville Rd.
Tallahassee, FL 32310
850.878-5343
850.656-6810 (fax)

1. These companies provide Navy Sales & Service support only. They are not intended for commercial use.

SERVICE NETWORK LISTING

BGSI, Inc
3121 NW 16th Terrace
Pompano Beach, FL 33064
954.971-0456
954.973-1825 (fax)
800.253-0200
www.bgsiflorida.com

BGSI, Inc
3311 Bartlett Ave.
Orlando, FL 32811
407.316-8010
407.316-0279 (fax)
888.399-2474
www.bgsiflorida.com

Commercial Appliance Service
8416 Laurel Fair Circle
Building 6, Suite 114
Tampa, FL 33610
813.663-0313
813.663-0212 (fax)
800.282-4718
www.comapp.com

Commercial Appliance Repair
9507 Sandpiper St.
Pensacola, FL 32514
850.478-5533
850.478-7062 (fax)

JS Equipment
19881 Date Palm Drive
Sugarloaf Key, FL 33042
305.745-3289

Specialty Marine Supply[1]
2057 Mayport Rd.
Atlantic Beach, FL 32233
904.247-3303
904.247-6403 (fax)

Whaley FoodService Repairs
8421 Atlantic Blvd.
Jacksonville, FL 32211-8737
904.725-7800
904.725-7828 (fax)
800.824-5843
www.whaleyfoodservice.com

GEORGIA

Adcox Service Company, Inc
5368 North Parkway
Atlanta, GA 30260
404.361-8010
404.361-3907 (fax)
800.722-6434

Georgia Con't
SRS
2200 Norcross Parkway
Suite 210
Norcross, GA 30071
800-235-6516
770-446-6177
770-446-3157 (fax)

Food Equipment Technology
4786 Lakepark Court
Lilvern, GA 30247
770.638-8600
770.275-6585 (fax)
770.377-5382 (cell)

Frothingham Commercial Services
PO Box 320
Evans, GA 30809-0320
706.863-8609

Total Service of Albany
835 Flint Ave.
Albany, GA 31701
912.888-2302
912.883-1548 (fax)
800.648-8321

Whaley FoodService Repairs
109-A Owens Industrial Drive
Savannah, GA 31405
912.447-0827
912.447-0826 (fax)
www.whaleyfoodservice.com

HAWAII

Food Equipment Service Company
300 Puuhale Rd.
Honolulu, HI 96819
808.847-4871
808.842-1560 (fax)

IDAHO

Ron's Service
703 E. 44th St., Suite 10
Boise, ID 83714
208.375-4073
208.375-4402 (fax)

ILLINOIS

Cone's Repair Service
2408 40th Ave.
Moline, IL 61265
309.797-5323

Eichenauer Services
130 S. Oakland
Decatur, IL 62522
217.429-4229
217.429-0226 (fax)
www.esiquality.com

Eichenauer Services
405 S. Neil St.
Champaign, IL 61820
217.359-4200
217.398-2960 (fax)
www.esiquality.com

General Parts
248 James Street
Bensenville, IL 60106
630.595.3300
630.595.0003 (fax)

Major Appliance Service
4330 Prescott Ave.
Lyons, IL 60534
708.447-4100
708.447-4157 (fax)

INDIANA

Commercial Parts & Service
5310 E. 25th St.
Indianapolis, IN 46218
317.251-9255
317.549-6282 (fax)
800.727-8710
www.commercialparts.com

General Parts
Indianapolis, IN
800.880.3604
800.880.5027 (fax)

IOWA

Cones Repair Service, Inc.
1056 27th Ave., SW
Cedar Rapids, IA 52404
319.365-3325
800.716-7070

Goodwin Service Co., Inc.
3509 Delaware Ave.
Des Moines, IA 50313
515.262-9308
515.262-2936 (fax)
800.372-6066
www.goodwintucker.com

1. These companies provide Navy Sales & Service support only. They are not intended for commercial use.

SERVICE NETWORK LISTING

KANSAS

General Parts, Inc.
1101 E. 13th St.
Kansas City, MO 64106
816.421-5400
816.421-1270 (fax)

General Parts
Northrock Business Park
8200 E. 34th St. Circle North
Bldg. #1800, Suite 1803
Wichita, KS 67201

Sunflower Rest
1647 Sunflower Lane
Salina, KS 67402
785-823-6394

KENTUCKY

Commercial Parts & Service of Louisville
4204 South Brook St.
Louisville, KY 40214
502.367-1788
502.367-0400 (fax)
800.752-6160
www.commercialparts.com

Quality Kitchen Service
2221 Buechell Ave.
Louisville, KY 40218
502.499-5850
502.499-5852 (fax)
800.999-5850

LOUISIANA

AM Services
5901 Catina St.
New Orleans, LA 70124
504.482-2302
504.488-7268 (fax)
504.830-9044 (pgr)

Bana Commercial Kitchen Parts
4028 Greenwood Rd.
Shreveport, LA 71109
318.631-6550
318.636-5675 (fax)
800.832-6550

Chandler's Parts & Service
11656 Darryl Drive
Baton Rouge, LA 70815
225.272-6620
225.272-7168 (fax)
800.569-9905
www.chandlerparts&service.com

LeBlanc Associates
248 Thompson Rd
Houma, LA 70363
504.876-7982
504.876-7989 (fax)
800.294-2653

Rabalais Service
2357 Robelies Drive
Maurice, LA 70535
337.984-5788
337.298-1356 (cell)

Reliance Commercial Service
5515A Pepsi St.
Harahan, LA 70123
504.734-8864
504.733-2559 (fax)
800.499-2351

MAINE

MRES
101 John Roberts Rd.
Unit #12
South Portland, ME 04106
207.772-1152
207.772-1445 (fax)

MASSACHUSETTS

Ace Service
95 Hampton Ave.
Needham, MA 02194
781.449-4220
781.444-4789 (fax)
800.225-4510
www.aceserviceco.com

MRES
34 South St.
Somerville, MA 02143
617.868-1930
617.868-5331 (fax)
800.338-6737

MARYLAND

Electric Motor Repair Company
700 E. 25th Street
Baltimore, MD 21218
410.467-8080
410.467-4191 (fax)
800.879-4994
www.emrco.com

Electric Motor Repair Company
106 Williamsport Circle
Salisbury, MD 21801
410.543-8080
410.548-4038 (fax)
www.emrco.com

MICHIGAN

A&R Repairs Baker=s Kneads
24551 Ryan Rd.
Warren, MI 48091
810.758-4440
810.758-0740 (fax)
800.852-2261
www.visimg.com/a&r

Midwest Food Equipment Service
3055 Dixie Ave.
Grandville, MI 49418
616.261-2000
616.261-2020 (fax)
800.288-7050

MINNESOTA

General Parts
11311 Hampshire Ave. South
Bloomington, MN 55438
952.944.5800
952.944.7101 (fax)

General Parts
Rochester, MN 55901
612.944.5800

General Parts
St. Cloud, MN 56301
612.944.5800

Metro Appliance Service
2857 Louisiana Ave., North
New Hope, MN 55427
612.546-4221
612.546-4286
800.345-4221

MISSISSIPPI

Camp Service & Parts, Inc.
328-B Oakdale St.
Jackson, MS 39202
601.353-9700
601.354-2940 (fax)
800.748-8793

CRESCO, Inc.
651 35th St.
Gulfport, MS 39506
228.864-3950
228.864-5134 (fax)

1. These companies provide Navy Sales & Service support only. They are not intended for commercial use.

SERVICE NETWORK LISTING

MISSISSIPPI CONT

KenJeter Store Equipment
5124 Cliff Gooken Blvd.
Tupelo, MS 38801
601-844-1192
601-844-1310 (fax)

MISSOURI

General Parts
1101 East 13th Street
Kansas City, MO 64106
816.421.5400
816.421.1270 (fax)

General Parts
Topeka, KS 66614
816.421.5400

General Parts
Springfield, MO 65801
816.421.5400

General Parts
St. Joseph, MO 64501
816.421.5400

Kaemmerlen Parts & Service
2728 Locust Street
St. Louis, MI 63103
314.535-2222
314.535-6205
800.325-8381
www.kps-stl.com

Service One
5812 Goves Lane
Jefferson City, MO 65101
573.659-7508
573.635-5835 (fax)

MONTANA

Appliance & Equipment Repair
4705 Mallard Way
Missoula, MT 59808
406.549-7122

NEBRASKA

Goodwin-Tucker Service Group
815 N. 19th Street
Omaha, NE 68102
402.345-7403
402.346-6145 (fax)
800.228-0342
www.goodwintucker.com

NEVADA

Burney's Commercial Service
4480 Alderbaran Ave.
Las Vegas, NV 89109
702.736-0006
702.798-7531 (fax)

NEW HAMPSHIRE

MRES
34 South St.
Somerville, MA 02143
617.868-1930
617.868-5331 (fax)
800.338-6737

NEW JERSEY

Insinger Machine Company
6245 State Road
Philadelphia, PA 19135
215.624-4800
215.624-6966 (fax)
800.344-4802
www.insingermachine.com

NEW MEXICO

SouthWest Appliance Repair
10812 Oakland NE
Albuquerque, NM 87122
505.856-6103
505.856-7684 (fax)

NEW YORK

Action Service
45 S. Fagan Ave.
Schenectady, NY 12304
518.377-0911
518.377-1704 (fax)

All Service
10 Charles St.
New Hyde Park, NY 11040
516.378-1176
516.378-1735 (fax)

B.E.S.T.
2133 Genesee Street
Buffalo, NY 14211
716.893-6464
716.893-6466 (fax)
800.338-5011

Duffy's Restaurant Service
3138 Oneida Street
Sauquoit, NY 13456
315.737-9401
315.737-7132 (fax)
800.836-1014
www.duffysequipmentservice.com

Northern Parts and Service
171 S. Catherine Street
Plattsburgh, NY 12901
518.563-3200
800.782-5424 (fax)
800.634-5005
www.northernparts.com

Quality Restaurant Repair
134 N. Montgomery St.
Walden, NY 12586
914.778-3554
914.778-1221 (fax)

Summit Restaurant Repair
272 Elmont Rd.
Elmont, NY 11003
516.326-7900
516.326-8021 (fax)
800.675-7560

NORTH CAROLINA

Whaley FoodService Repairs
8334-K Arrowridge Blvd.
Charlotte, NC 28273
704.529-6242
704.529-1558 (fax)
800.877-3599
www.whaleyfoodservice.com

Whaley FoodService Repairs
203-D Creek Ridge Rd.
Greensboro, NC 27406
336.333-2333
336.333-2533 (fax)
800.800-0807
www.whaleyfoodservice.com

Whaley FoodService Repairs
335-105 Sherwee Dr.
Raleigh, NC 27603
919.779-2266
919.779-2224
800.849-6011
www.whaleyfoodservice.com

Whaley FoodService Repairs
6418-101 Amsterdam Way
Wilmington, NC 28405
910.791-0000
910.791-6020
800.758-2314
www.whaleyfoodservice.com

1. These companies provide Navy Sales & Service support only. They are not intended for commercial use.

SERVICE NETWORK LISTING

NORTH DAKOTA

General Parts
10 South 18th Street
Fargo, ND 58103
701.235.4161
701.235.0539 (fax)

Dakota Food Equipment Service
P.O. Box 2925
1802 1st Avenue, S.
Fargo, ND 58108
701.232-4428
800.437-4076

OHIO

Commercial Parts & Service
204 Linden Avenue
Dayton, OH 45403
513.259-0091
513.259-0753 (fax)
800.589-5251

Commercial Parts & Service
6940 Plainfield Rd.
Cincinnati, OH 45236
513.984-1900
513.984-2111 (fax)
800.837-2828

DMO Food Equipment Services
8400 Sweet Valley Dr.
Cleveland, OH 44125
216.328-0600
216.328-0604 (fax)
800.837-0605
www.dmoservice.com

Electrical Appliance Repair
5805 Valley Belt Rd.
Cleveland, OH 44131
216.459-8700
216.459-8707 (fax)
800.621-8259

The Wichman Company
1720 Arlington Ave.
Toledo, OH 43537
419.385-9121

OKLAHOMA

Krueger Electric Service
100 NE 24th Street
Oklahoma City, OK 73105
405.528-8883
405.528-5405 (fax)
800.522-8069

Robbins Restaurant Repair
1000 W. Main
PO Box 851155
Yukon, OK 73085
405-350-2070
405-980-7356 (pager)
405-350-0980 (fax)

OREGON

Arent Machinery Company[1]
15815 SE 135th Ave.
Clackamus, OR 97015
503.657-3000
503.657-7792 (fax)
800.547-2527

Ron=s Service
16364 SW 72nd Ave.
Portland, OR 97224-7750
503.624-0890
503.684-6107 (fax)
800.851-4118
www.ronsservice.com

PENNSYLVANIA

Commercial Kitchen Service
223 Church St.
Carroltown, PA 15722
814.344-8100

Insinger Machine Company
6245 State Road
Philadelphia, PA 19135
215.624-4800
215.624-6966
National 800.344-4802
www.insingermachine.com

K&D Service Company
1833-41 N. Cameron St.
Harrisburg, PA 17103
717.236-9039
717.238-4367 (fax)
800.932-0503

RHODE ISLAND

Food Equipment Service
200 Broad St.
Providence, RI 02903
401.331-1163
401.521-5560

SOUTH CAROLINA

Whaley FoodService Repair
748 Congaree Rd.
Greenville, SC 29607
864.234-7011
864.234-6662 (fax)
800.494-2539
www.whaleyfoodservice.com

Whaley FoodService Repair
1406-C Commerce Place
Myrtle Beach, SC 29577
843.626-1866
843.626-2632 (fax)
www.whaleyfoodservice.com

Whaley FoodService Repair
4740-A Franchise St.
N. Charleston, SC 29419
843.760-2110
843.760-2255 (fax)
www.whaleyfoodservice.com

Whaley FoodService Repair
P.O. Box 4023
West Columbia, SC 29171
803.791-4420
803.794-4630 (fax)
800.877-2662
www.whaleyfoodservice.com

SOUTH DAKOTA

Hogg Restaurant Service
821 Railroad Ave.
Aberdeen, SD 57401
605.225-1845
605.225-0569 (fax)
800.456-1469

TENNESSEE

ATECH, Inc.
424 6th Ave., South
Nashville, TN 37203
615.255-2002
615.255-2698 (fax)
800.700-9192

ATECH, Inc.
Regency Business Park
900 East Hills Ave., Suite 135
Knoxville, TN 37915
865.522-0777
865.522-4060 (fax)
800.492-0777

1. These companies provide Navy Sales & Service support only. They are not intended for commercial use.

SERVICE NETWORK LISTING

EverQuip
1687 Shelby Oaks Drive North
Suite 6
Memphis, TN 38134
901.379-0900
901.379-0935

Food Equipment Service Company
1209 S. Watkins Street
Chattanooga, TN 37403
615.624-3381
615.624-3383 (fax)
800.727-8447
www.fesco-tenn.com

TEXAS

Allan=s Tri-State Service
404 S. Hayden
Amarillo, TX 79101
806.376-8345
806.416-6912 (fax)
800.227-9022
www.allentri.com

Argos Food Equipment Service
10850 Sanden Drive
Dallas, TX 75238
214.340-2228
214.340-2363 (fax)
800.536-2228
www.stoveparts.com

Armstrong Repair Center
1700 S. Lamar Blvd., #327
Austin, TX 78704
512.416-1101
512.416-6912 (fax)
800.392-5322

Armstrong Repair Center
5110 Glenmont Drive
Houston, TX 77081
713.666-7100
713.665-5542 (fax)
800.392-5325
www.armstrongrepair.com

Commercial Kitchen Repair
1377 N. Brazos
San Antonio, TX 78207
210.735-2811
210.735-7421 (fax)
800.292-2120
www.commercialkitchen.com

Dowell Commercial Service Co.
3736 W.O.W Ave.
Corpus Christi, TX 78413
540.855-0633
540.854-7028 (fax)
800.242-5928

Stove Parts Supply Company
2120 Solana St.
P.O. Box 14009
Ft. Worth, TX 76117
817.831-0381
817.834-7754 (fax)
800.433-1804
www.stoveparts.com

TEXAS Cont'd

Thermal Control, Inc.
3509 Duranzo
El Paso, TX 79905
915.544-6634
915.533-6973 (fax)

UTAH

Peterson's Commercial Parts & Service
1370 S. 400 West
Salt Lake City, UT 84115
801.487-3653
801.487-2253 (fax)
800.955-9201
www.petersonscommercial.com

VIRGINIA

D.W. Boyd Company[1]
4003 Colley Ave.
Norfolk, VA 23508
757.423-2268
757.423-1868 (fax)
www.dwboyd.com

REP&S/Richmond
163 Brandon Rd.
Richmond, VA 23224
804.230-1612
804.232-8301 (fax)
800.388-8667

Restaurant Equip Parts & Service 133 1st Colonial Rd.
Virginia Beach, VA 23454
757.425-5038
757.425-5955 (fax)
800.262-0802
www.galleyparts.com

WASHINGTON

ARHA Total Service, Inc
313 S. 4th St.
Pasco, WA 99301
509.547-3799
509.547-6355 (fax)

Restaurant Appliance Service
7219 Roosevelt Way, NE
Seattle, WA 98115
206.524-8200
206.525-2890 (fax)

WEST VIRGINIA

Statewide Service
603 Main Ave.
Nitro, WV 25143
304.755-1811
304.755-4001 (fax)
800.441-9739

WISCONSIN

Appliance Service Center
2439 Atwood Ave.
Madison, WI 53704
608.246-3160
608.246-2721 (fax)
800.236-7440

General Parts
6633 West National
Milwaukee, WI 53214
414.257-4008
800.279-9978 (fax)
800.279-9976
www.generalparts.com

General Parts
W223 N735 Saratoga Dr.
Waukesha, WI 53186
262.650.6666
262.650.6660 (fax)

General Parts
Madison, WI 53716
800.279.9976

General Parts
Green Bay, WI 54303
800.279.9976

General Parts
Eagle River, WI 54521
800.279.9976

1. These companies provide Navy Sales & Service support only. They are not intended for commercial use.

SERVICE NETWORK LISTING

General Parts
Sheboygan, WI 53083
800.279.9976

WYOMING

Ericksons Commercial Service
721 Terry Ranch Road
Cheyenne, WY 82007
307.637-4424

CANADA

HRD Kitchen Services
4475 Rouen St.
Montreal, Que
Canada H1V 1H1
514.254-9956
514.251-2562 (fax)

Sure-Fix Food Equipment Service
188 Queenston Street
St. Catherines, Ontario
Canada L2R 2Z7
905.544-4664
905.685-1156 (fax)

VAS Restuarant Equip Service
3105 Unity Drive
Mississauga, Ontario
Canada L5L 4L2
905.828-5808
905.828-7505 (Fax)

BERMUDA

D.E. Mortimer & Co. LTD.
#2 Harvey Rd.
Paget, Bermuda HMAX
809.236-8848
809.236-1350 (fax)

GUAM

Cabuhat Technical Sales
PO Box 20207
G.M.F, GUAM 96921
671.653-7307
671.653-7307 (fax)

JAMAICA

Econergy Engineering Services
PO Box 352
Main St.
Ocho Rio, Jamaica
809.974-2981
809.974-5064 (fax)

PUERTO RICO

Leodi International
Maestro Cordero
Haeto Rey, Puerto Rico
809.751-3412

Service Network Listing.doc
release date: August 22, 2002

Insinger provides this SERVICE NETWORK LISTING to its customers as an aid to the efficient servicing of their Insinger equipment.

The following Codes give specific details about off-hour service that the service agencies provide:

Codes
1. *24 hour service*
2. *24 hour service guaranteed within 4 hours*
3. *Marine Service Agency*

When contacting the service agencies or the factory for service, please have the machine model and serial number available.

Insinger reserves the right to change these companies as necessary. For an updated listing, or to check on these companies, please contact our Technical Services Department, 800.344.4802.

Thank You.

Insinger Machine Company

revised: 3/92
updated: 4/93

1. These companies provide Navy Sales & Service support only. They are not intended for commercial use.

TRAYWASHER SERIES
Installation Instrucitons
Part 2, Section A

2.A.1 PLACEMENT

2.A.1.1 Carefully uncrate machine. Take caution to not damage components which may be mounted on the top or sides of the machine.
2.A.1.2 Set unit in place and adjust the feet to level the machine.
2.A.1.3 Fasten the table (optional) to the load side of the machine. Most installations require fastening the turn-down lip of the dishtables to the side of the machine with flathead counter-sunk screws.

2.A.2 ELECTRICAL CONNECTIONS

2.A.2.1 Connect electrical lines sized for the correct voltage, current and phase of the machine. These should agree with machine requirements indicated on the nameplate and labels in the control panel.
2.A.2.2 Machines not provided with a single-point connection (optional) require (2) separate electrical connections:
1. pumps and control circuit
2. wash tank heater(s)

2.A.2.3 If an electrical booster is provided connect the power directly to the booster.

CAUTION

Connections must be made to a circuit breaker or fused disconnect as provided by the end-user and required by local codes. A laminated wiring diagram is inside the control panel

CAUTION

As with any 3 phase system, an electrician must check all motors for proper phasing, i.e., Pump motors must be running in direction indicated by arrow on housing.

2.A.3 MECHANICAL CONNECTIONS

2.A.3.1 Connect a 110°F (for 70°F rise) or a 140°F (for 40°F rise) water line for tank fills and booster as tagged and noted on the installation drawings.
2.A.3.2 If machine is provided with steam heat connect the steam lines and steam condensate lines as tagged and noted on installation drawings.
2.A.3.3 Connect the drain lines.
2.A.3.4 If a booster is provided a110°F (for 70°F rise) or a 140°F (for 40°F rise) water connection is necessary. A steam booster also requires a condensate line.

CAUTION

Drain lines must be as specified on installation drawings. Drain line should be properly vented and should have fall of not less than ¼" to the foot of proper flow. Some area plumbing codes require drains to flow into an open gap with an opening twice the diameter of the pipe. Check with your local plumbing codes for the type of drain connection required.

CAUTION

Prior to the machines first use, all plumbing lines should be flushed.

CAUTION

Do not reduce the size of lines as specified in installation drawings. All lines are sized to facilitate necessary flows, pressures, etc.

2A.4 HVAC

2.A.4.1 Ventilation system should be sized to provide adequate ventilation per machine specs. Refer to spec sheet.

2.A.4.2 Stainless steel, watertight ducting should be connected to the vent cowls on each end of the machine. Refer to spec sheet and installation drawing.

2.A.5 Chemicals

2.A.5.1 Upon completed installation of the dishwasher contact a local detergent/chemical supplier for the correct chemicals for your dishmachine.

2.A.5.2 Electrical connection points for the detergent dispenser and rinse injector are located inside the control panel. Refer to the machine wiring diagram for the proper connection points. Dispensers may be connected on either the primary voltage side of the machine or the 24VAC control voltage side.

CAUTION

When connecting on the 24VAC control voltage side of the transformer, total KVA must not exceed 50VA.

2.A.5.3 The detergent density probe should be placed in the hole provided.

2.A.6 Tabling

2.A.6.1 Install rack guides on exit table using mounting studs provided.

2.A.6.1 Unload table should be pitched towards the machine to return excess water into the machine.

Insinger
Machine Company

TRAYWASHER SERIES
Operation & Cleaning Instructions
Part 2, Section B

By following the operation procedure and general cleaning procedures your Insinger traywasher will give years of trouble free service.

2.B.1 Operation Instructions

2.B.1.1 Place drain overflow tube in drain basket. Close all tank drain valves. One drain is provided for each tank of the traywasher.
2.B.1.2 Check for proper installation and cleanliness of all internal, removable components such as suction strainers, scrap screens, and spray manifolds.
2.B.1.3 Water and steam lines must be open, electrical circuits on.
2.B.1.4 Close machine doors.

NOTE
An interlock is provided to shut the machine down if the doors are open, therefore the machine will not run if doors are opened. Machines provided with the optional Security Package do not have this feature.

2.B.1.5 Move the power switch to the "ON" position. The power light will illuminate. The tank(s) will automatically fill. When the tanks are full the tank heat will operate automatically.

NOTE
To ensure proper operation of the auto tank fill feature and the tank heaters the level float located in each tank MUST be cleaned daily.

2.B.1.8 Press the Green button to start the pumps and conveyor.
2.B.1.9 The system is now ready for operation. All ware should be properly scrapped.
2.B.1.10 Place the tray on the conveyor belt. The tray will pass through the machine cycles.

NOTE
The photo-eye located at the entrance chute of the machine should be cleaned daily of lime build-up for proper operation of the energy saver feature and the final rinse.

2.B.1.11 Press the RED stop button to turn the pumps and conveyor OFF.
2.B.1.12 Move the Power toggle switch to the "OFF" position.

CAUTION
Move the Power toggle switch to the "OFF" position before draining the machine.

2.B.1.13 Refer to the cleaning procedures for proper clean-up of the dishmachine.
2.B.1.14 Report any unusual occurrences to qualified service personnel.

The following cleaning procedures should be done daily, at the end of the shift.

2.B.2 Cleaning Procedures, Daily

2.B.2.1 Remove all internal removable parts including spray manifolds, scrap screens, drain overflow tubes, suction strainers and curtains.
2.B.2.2 Remove the end caps from the spray manifolds and clean with the brush provided. Flush the manifolds.
2.B.2.3 Flush scrap screens.
2.B.2.4 Clean drain overflow tube.

CAUTION
V-cup seal on the drain overflow tube may become gummed not allowing the overflow tube to seat properly. This will cause the drain to leak water. Remove any build-up on the V-cup seal. When the seal becomes worn, replace.

2.B.2.5 Clean suction strainers of build-up.

CAUTION
Improper cleaning of suction strainers will cause the pumps to cavitate. This will cause poor washing results.

2.B.2.6 Clean tank level floats (1 per tank) with Scotch-Brite™ or equivalent.

CAUTION
Level floats must be cleaned daily. Build-up of grease and scum will cause faulty operation of tank fill and heating system.

2.B.2.6 Clean curtains. When curtains are beyond cleaning or torn they should be replaced.
2.B.2.7 Final rinse nozzles should be cleaned of matter clogging the jet spray.
2.B.2.8 Clean the photo-eye lenses with a damp, soft cloth.
2.B.2.9 Doors should be left open to allow drying of interior surfaces.

Insinger
Machine Company

TRAYWASHER SERIES
Maintenance & Repair Procedures
Part 3, Section A

Following is a basic guide for the repair and replacement of common traywasher parts. Refer to the Basic Service Guide for troubleshooting tips.

3.A.1 MAINTENANCE

3.A.1.1 Daily - Refer to the operation and cleaning instructions provided in this manual for daily cleaning procedures.

3.A.1.2 Weekly

3.A.1.2.1 The entire machine should be wiped down using an industrial grade stainless steel cleaner.

3.A.1.2.2 Under the supervision of your detergent supplier the machine interior must be properly de-limed.

NOTE
The water quality in some areas requires de-liming to be done more frequently. Contact your detergent supplier for recommended de-liming frequency.

3. A.1.3 Quarterly

3.A.1.3.1 Remove and clean the strainer screens on water and steam lines. If the screens cannot be cleaned, replace.

3.A.1.3.2 Inspect condition of solenoid valve seats and diaphragms. Replace where necessary.

3.A.1.3.3 Inspect drain O-Rings for leakage. Replace where necessary.

3.A.1.3.4 Adjust conveyor chain tension using adjustment bolts located at machine entrance chute.

3.A.2 MAINTENANCE PROCEDURES

3.A.2.1 Solenoid Valve Disassembly

3.A.2.1.1 Disconnect power supply to machine. Turn off water supply.

3.A.2.1.2 Remove cap on top of coil. Remove coil.

3.A.2.1.3 Remove 4 hex bolts and lift bonnet from valve body. Note positioning of spring and plunger.

3.A.2.1.4 Remove main piston.

3.A.2.1.5 Inspect for dirt, wear or lime build-up. Clean or replace as required.

3.A.2.1.6 Reassemble in reverse of disassembly.

3.A.2.2 Line Strainer Disassembly

3.A.2.2.1 Shut off water or steam supply.

3.A.2.2.2 Remove large hex nut on bottom of strainer body.

3.A.2.2.3 Remove strainer screen. Inspect and clean or replace as necessary.

3.A.2.2.4 Reassemble in reverse of disassembly. Water flow must be same direction as arrow on line strainer body. Use new gaskets to insure a tight seal.

3.A.2.3 Pump Disassembly

3.A.2.3.1 Before disassembling pump ensure there are no obstructions in the pump intake. Remove and Clean the suction strainer (inside tank).

3.A.2.3.2 IT IS NOT NECESSARY TO REMOVE THE PUMP HOUSING FROM THE MACHINE TO DISASSEMBLE THE PUMP.

3.A.2.3.3 Remove the pump motor and impeller adaptor by removing the 4 hex bolts attaching them to the pump housing.

3.A.2.3.4 Repair or replace the pump parts as required.

3.A.2.3.5 Reassemble in reverse of disassembly.

3.A.2.4 Immersion Heater Replacement

3.A.2.4.1 The immersion heater MUST be completely submerged at all times. If this is not the case contact a qualified service technician. The heated surface should never be in contact with sludge.

3.A.2.4.2 Remove the housing covering the wiring terminations. Disconnect the immersion heater wires.

3.A.2.4.3 Remove the immersion heater by loosening and removing the large hex nut.

3.A.2.4.4 Install in reverse of removal.

NOTE
Use plumbers putty as gasketing around the immersion heater installation nut.

3.A.2.5 Tank Heat Temperature Adjustment

3.A.2.5.1 A temperature control board is provided in the control panel for easy adjustment of tank temperature. Though tank temperature is adjusted during the machines factory test it is sometimes necessary to re-adjust the temperature at start-up.

3.A.2.5.2 Locate the temperature control board (P/N DE9-96). Use the control panel layout drawing located in Section 4, Electrical Schematic and Replacement Parts.

3.A.2.5.3 Adjust the tank temperature to the correct temperature by turning the potentiometer located on the temperature control board. An arrow on the potentiometer indicates increase.

NOTE
Correct temperatures are: Prewash: below 140°F wash: minimum 150°F final rinse: 180°F to 195°F

3.A.2.5.4 If the temperature does not change refer to section A.2.6, Troubleshooting Tank Temperatures.

3.A.2.6 Troubleshooting Tank Temperatures

3.A.2.6.1 Electric Heat

3.A.2.6.1.1 If temperature cannot be adjusted per section A.2.5 check the temperature control board P/N DE9-96 proper operation. If the temperature control board is faulty, replace.

3.A.2.6.1.2 Verify tank heat contactor is working correctly. If not, replace.

3.A.2.6.1.3 Verify all immersion heaters are working properly and not limed. If not, replace.

3.A.2.6.2 Steam Heat

3.A.2.6.2.1 See Section 3.A.2.6.1.1.

3.A.2.6.2.2 Verify steam pressure per machine specifications.

3.A.2.6.2.3 Verify steam trap is not clogged. If so, clean and/or replace.

3.A.2.7 Motor Overloads

3.A.2.7.1 All motors used on Insinger Machines are provided with motor overloads. Motor overloads are adjusted when the machines are factory tested. Should it be necessary to adjust the motor overloads in the field first verify the motor current draw for the voltage the machine is using.

3.A.2.7.2 Refer to the Control Panel Component Layout Dwg. located in Section 4 to identify the overload, adjust by turning the dial to the appropriate AMP draw.

3.A.2.8 Level System

3.A.2.8.1 The level control system consists of one level timer (P/N DE7-35) and one level float (DE5-60) in the wash tank and one level float (DE5-60) in the prewash tank.

3.A.2.8.2 When the system is powered-up, the tank(s) will begin to fill (assuming no water is in the tanks).

3.A.2.8.3 Once the level float is actuated, the timer begins to time-out and continues the filling process until the tank(s) is full.

CAUTION

Dirty level floats will cause the tank heat to energize with no water in the tanks.
LEVEL FLOATS MUST BE CLEANED DAILY.

3.A.2.9 Final Rinse

3. A.2.9.1 The final rinse is actuated by a photo-eye located on the entrance chute (not used on machines with the security package option). As a tray passes the photo-eye the beam is broken. The Final Rinse timer (P/N DE7-27) will energize the final rinse solenoid. The final rinse water will then flow.

3.A.2.9.2 The Energy Saver timer (P/N DE7-28) is also reset keeping the machine running.

3.A.2.9.3 Both timers are adjustable by turning the potentiometer located on the timer board. The final rinse timer is adjustable 0-60SEC. The energy saver timer is adjustable 0-300SEC.

Insinger Machine Company

BASIC SERVICE GUIDE

SYMPTOM	POSSIBLE CAUSE	Solution
1. Machine will not operate	a. No power b. Blown fuse or tripped breaker c. Motor overloads tripped	a. Check power supply b. Replace fuse; reset breaker c. Reset overload
2. Tank will not hold water	a. Drain not closed b. Drain overflow not seated or installed c. Pump petcock opened d. Overflow v-seal dirt/worn	a. Close drain b. Reseat or install drain overflow c. Close pump petcock d. Clean/replace v-seal
3. Tank fills beyond overflow	a. Obstruction in overflow tube or drain line	a. Remove obstruction
4. Water leaks around door	a. Doors not seating b. Clogged spray pipe	a. Reseat doors b. Clean spray pipe with brush provided
5. Weak or ineffective spray	a. Clogged spray pipe b. Manifolds not installed properly c. Obstruction in pump d. Pump rotation reversed e. Suction strainer clogged	a. Clean spray pipe with brush pipe b. Ensure proper placement of upper and lower pipes c. Clear obstruction through pump inspection plate d. Arrow on pump housing indicates direction, correct electrically e. Clean suction strainer

rlsd: 4/91
cm \wp51/mnl/mnlbsg

Insinger Machine Company

BASIC SERVICE GUIDE

SYMPTOM	POSSIBLE CAUSE	Solution
6. Weak or ineffective final rinse spray	a. Lime deposits in spray nozzles b. Low water pressure c. Clogged line strainer d. Closed water supply valve	a. Clean or replace nozzles b. Adjust to 20PSI c. Remove line strainer and clean d. Open ball valve
7. Water hammer	a. Excessive water line pressure	a. Install water hammer valve
8. Machine vibrates or is noisy	a. Pump rotation reversed	a. Arrow on pump housing indicates direction, correct electrically
9. Final rinse will not shut off	a. Final rinse solenoid valve clogged b. Diaphragm worn c. Solenoid valve still powered-up	a. Disassemble valve and clean internal parts of scale or replace b. Replace with solenoid valve repair kit c. Check final rinse actuating circuit for proper operation

6245 State Road
Philadelphia
PA 19135-2996

800.344.4802
215.624.4800
FAX 215.624.6966
www.insingermachine.com

BASIC SERVICE GUIDE

SYMPTOM	POSSIBLE CAUSE	SOLUTION
10. Tank not filling/tank heat coming on with no water in tank	a. Level float dirty b. Level control system not working	a. Clean level float b. Troubleshoot level control circuit
11. Tank temperature too low/high	a. Thermostat not adjusted b. Heat circuitry not working c. Electric heat - power turned off d. Electric heat - immersion heaters limed e. Steam heat - steam turned off f. Steam heat - not enough steam g. Steam heat - condensate traps clogged h. Gas heat - gas turned off i. Gas heat - pilot not lit (if provided)	a. Adjust thermostat b. Troubleshoot circuitry c. check circuit breakers d. De-lime machine e. Turn steam on f. Adjust steam pressure per machine spec's g. Clean or replace condensate traps h. Turn on gas i. Re-light pilot

rlsd: 4/91
cm \wp\mnl\mnlbsg

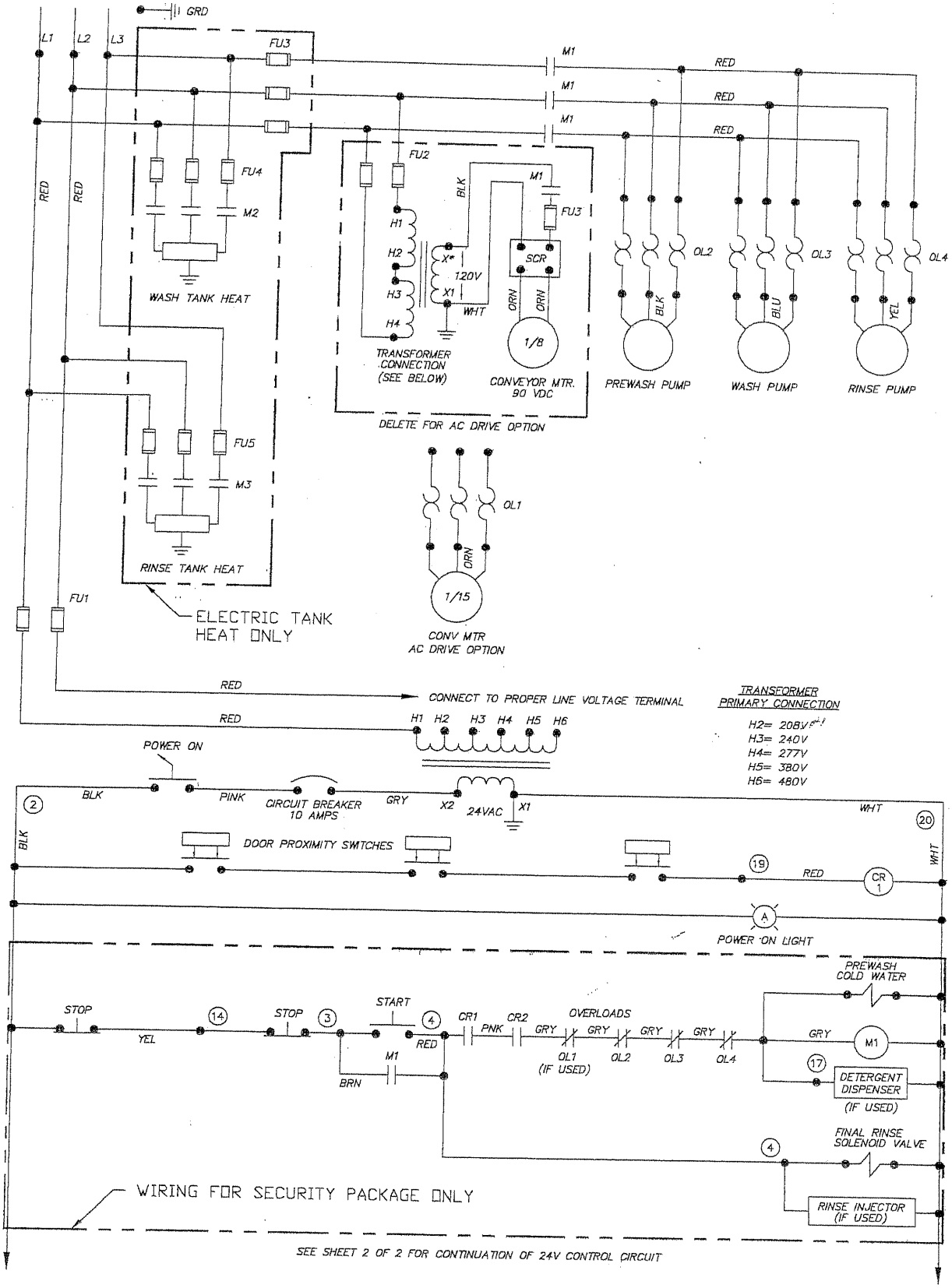

DC MOTOR DRY TRANSFORMER CONNECTIONS				
	208 VAC	230 VAC	380 VAC	460 VAC
L1 TO	H1 & H3	H1 & H3	H1	H1
L2 TO	H2 & H4	H2 & H4	H4	H4
	–	–	–	H2 TO H3
X*	X4	X4	X3	X4
	X1 TO X3	X1 TO X3	–	X1 TO X3
	X2 TO X4	X2 TO X4	–	X2 TO X4

SHEET 1 OF 2

REV	ECN NO	DATE
B	1934	5.8.02
A	1917	2.19.0

FILE: WIRE\WTRAC024

TITLE: TRAC-878 ELECTRIC OR STEAM HEAT

DWG. NO. WTRAC024

Insinger
Philadelphia, PA 19135
(215) 624-4800
FAX (215) 624-6966

DRWN/DATE MFJ 3.30.01

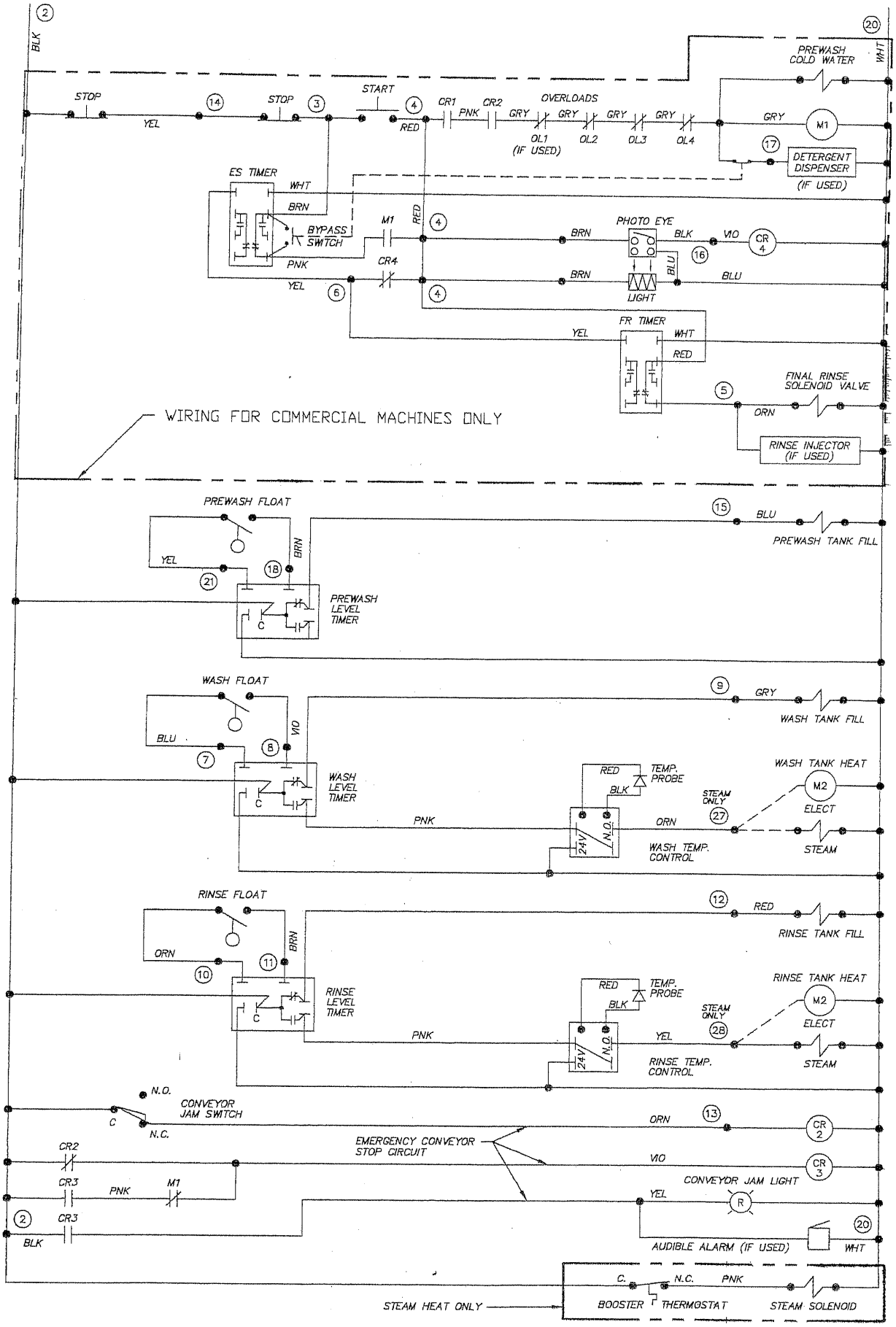

REV	ECN NO	DATE
B	1934	5.8.02
A	1917	2.19.0

FILE: WIRE\WTRAC024

SHEET 2 OF 2

TITLE: TRAC-878 ELECTRIC OR STEAM HEAT

DWG. NO. WTRAC024

Insinger
Philadelphia, PA 19135
(215) 624-4800
FAX (215) 624-6966

DRWN/DATE MFJ 3.30.01

ITEM	DESCRIPTION		PART NO.	QTY
9				
10	GROUNDING STUD		D309C-GC-4G	1
11	LOCKWASHER, 1/4"		D313C-G5	1
12	HEX NUT, 1/4-20		D312C-GC-2	1
13	CONTACTOR (MOTORS)			1
	220-460	SP4	DE1-93	
	208	SP17	DE1-56AE	
14	RELAY BASE		DE2-37	3
15	RELAY		DE2-38	3
16	RELAY HOLD DOWN SPRING		DE3-43	3
17	DIN RAIL (35 mm)		DE9-84	1
18	DIN RAIL (15 mm)		DE3-42	1
19	TERMINAL SECTION		DE3-39	AR
20	TERMINAL END COVER PLATE		DE3-40	1
21	TERMINAL END CLAMP		DE3-41	2
22	TEMPERATURE CONTROL BOARD		DE9-251	2
23				
24	FUSE BLOCK, 2 POLE (DC DRV XFMR)		DE9-185	1
25	OVERLOAD RELAY (OPTIONAL 1/15 HP AC CONV DRIVE)			1
	460/3/60	.16-.25 A	DE2-91	
	380/3/50	.16-.25 A	DE2-91	
	230/3/60	.25-.40 A	DE2-92	
	220/3/50	.25-.40 A	DE2-92	
	208/3/60	.25-.40 A	DE2-92	

ITEM	DESCRIPTION		PART NO.	QTY
26	CONTACT BLOCK, NC		DE5-42AE	1
27	TIMER (LIQUID LEVEL)		DE7-35	3
28	CONTROL BOX, 24 X 16 X 8		DE9-248	1
29	OVERLOAD BASE		DE2-60	AR
30	DC DRIVE CONTROL		2M510	1
31	POTENTIOMETER BRACKET		1094-115	1
32	FUSE BLOCK, 1 POLE (SCR)		DE9-42	1
33	FUSE (SCR)	FNQ-R-3	DE9-173	1
34	TERMINAL BLK ASSY		DE3-9	1
35	SELECTOR SWITCH ASSY		DE8-54	1
36	PUSHBUTTON ASSY, START-STOP		DE5-32SQ	1
37	CONTACT BLK, NO/NC		DE5-46SQ	1
38	PILOT LIGHT ASSY - YELLOW		DE8-53	1
39	PILOT LIGHT ASSY - RED		DE8-52	1
40	CIRCUIT BREAKER (10A)		DE9-106	1
41	TERMINAL BLOCK ASSY			
	380-460 V		DE3-3	1
	208-240 V		DE3-152	1
42	DATA DECAL		SK-3715	1
43	AUXILIARY CONTACT, NC		DE1-61AE	1
44	AUXILIARY CONTACT, NO		DE1-62AE	1

ITEM	DESCRIPTION				PART NO.	QTY
45	FUSE BLOCK (SINGLE PT CONN WITH ELECT TANK HEAT)				DE9-186	3
46	FUSE (SINGLE PT CONN WITH ELECT TANK HEAT)					9
		208	230	380	460	
	MOTORS	30 A	30 A	15 A	15 A	
	HEATERS	30 A	25 A	15 A	15 A	
	FUSE PART NO'S					
	15 A	FNQ-R-15		DE9-183		
	20 A	FNQ-R-20		DE9-184		
	25 A	FNQ-R-25		DE9-220		
	30 A	FNQ-R-30		DE9-227		

NOT SHOWN

ELECTRIC IMMERSION HEATER (3 KW)		2
440-480 V, 3 PH	DE13-SC73	
380 V, 3 PH	DE13-SC53	
220-240 V, 3 PH	DE13-SC43	
208V, 3PH	DE13-SC23	
ELECTRIC IMMERSION HEATER (5 KW)		2
440-480 V, 3 PH	DE13-SD73	
380 V, 3 PH	DE13-SD53	
220-240 V, 3 PH	DE13-SD43	
208V, 3PH	DE13-SD23	
STOP PUSHBUTTON STATION	DE5-70	1
OPTIONAL AUDIBLE CONVEYOR JAM ALARM	DE9-231	1
TEMPERATURE SENSOR	DE9-252	2
TRANSFORMER, 250 VA (DC DRIVE OPTION)	DE6-26	1
TERMINAL BLOCK (HEATERS)	DE3-3	2

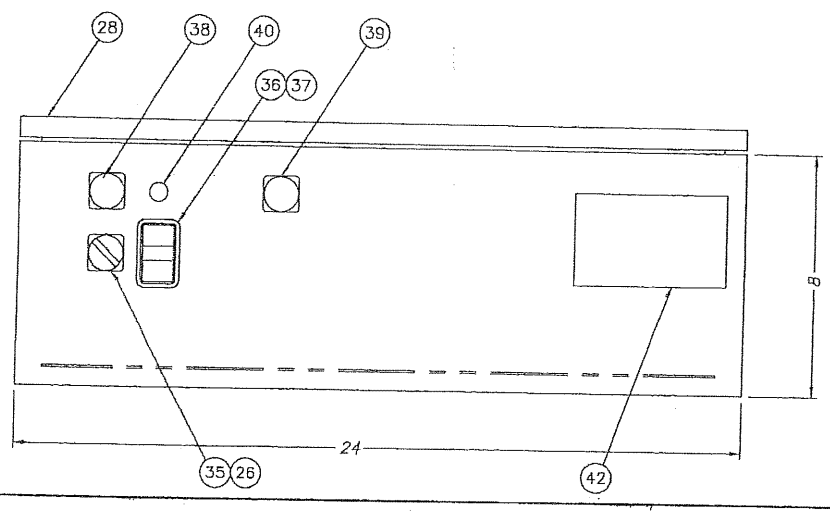

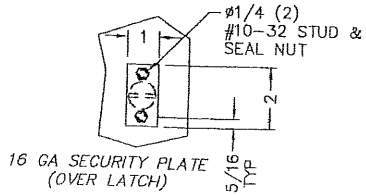

SHEET 2 OF 2

TITLE	TRAC 878 CONTROL PANEL LAYOUT SECURITY PACKAGE		
Insinger	Philadelphia, PA 19135 (215) 624-4800 FAX (215) 624-6966	DRWN/DATE MFJ 4.2.01	
		FILE: SKETCH\SK-4470	
B 1945 7.17.02		SCALE 1/4	DWG. NO. SK-4470
A 1934 5.8.02			
REV ECN NO DATE			

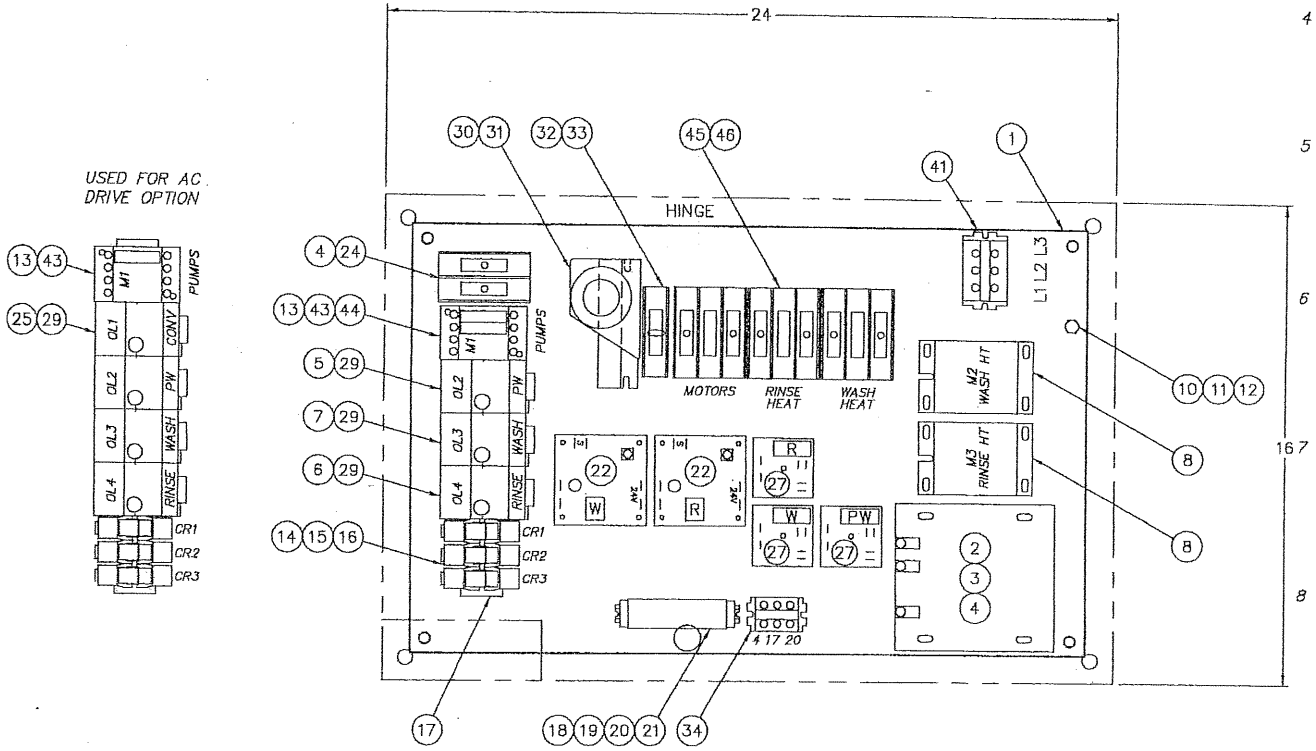

ITEM	DESCRIPTION		PART NO.	QTY
1	COMPONENT MOUNTING PLATE		SK-4471	1
2	CONTROL TRANSFORMER (250 VA, 24 VAC)		DE6-25	1
3	FUSE BLOCK KIT (250 VA XFMR)		DE9-165	1
4	FUSE (250 VA TRANSFORMER PRIMARY)			AR
	460 V	FNQ-R-1.8	DE9-169	
	380 V	FNQ-R-2	DE9-170	
	220 - 230 V	FNQ-R-3.5	DE9-174	
	208 V	FNQ-R-4	DE9-175	
5	OVERLOAD RELAY (1/2 HP PREWASH PUMP)			1
	460/3/60	1-1.6 A	DE2-50	
	380/3/50	1-1.6 A	DE2-50	
	230/3/60	1.6-2.5 A	DE2-52	
	220/3/50	1.6-2.5 A	DE2-52	
	208/3/60	1.6-2.5 A	DE2-52	
6	OVERLOAD RELAY (2 HP RINSE PUMP)			1
	460/3/60	2.5-4 A	DE2-53	
	380/3/50	2.5-4 A	DE2-53	
	230/3/60	5.5-8 A	DE2-55	
	220/3/50	5.5-8 A	DE2-55	
	208/3/60	5.5-8 A	DE2-55	
16 7	OVERLOAD RELAY (3 HP WASH PUMP)			1
	460/3/60	4-6 A	DE2-54	
	380/3/50	4-6 A	DE2-54	
	230/3/60	7-10 A	DE2-56	
	220/3/50	7-10 A	DE2-56	
	208/3/60	7-10 A	DE2-56	
8	CONTACTOR (8 KW ELECT TANK HEAT)			2
	460/3/60	30 A RES	DE1-109	
	380/3/50	30 A RES	DE1-109	
	230/3/60	30 A RES	DE1-109	
	220/3/50	30 A RES	DE1-109	
	208/3/60	30 A RES	DE1-109	

SHEET 1 OF 2

TITLE: TRAC 878 CONTROL PANEL LAYOUT
SECURITY PACKAGE

Insinger
Philadelphia, PA 19135
(215) 624-4800
FAX (215) 624-6966

DRWN/DATE: MFJ 4.2.01

FILE: SKETCH/SK-4470

REV	ECN NO	DATE
B	1945	7.17.02
A	1934	5.8.02

SCALE: 1/4

DWG. NO. SK-4470

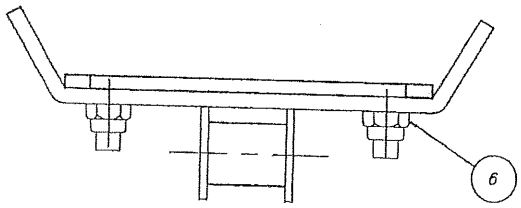

SECTION A–A

(FULL SCALE)

ITEM	PART NO.	DESCRIPTION	QTY
1	D308C–1 1/2	CHAIN	1
2	D308C–1 1/2 CL	CONNECTING LINK	1
3	1361–131	CROWN, CRADLE	55
4	1361–130	CRADLE	55
5	1361–132	RETAINER, CROWN	55
6	D312C–EF–5	LOCKNUT #10–32	110

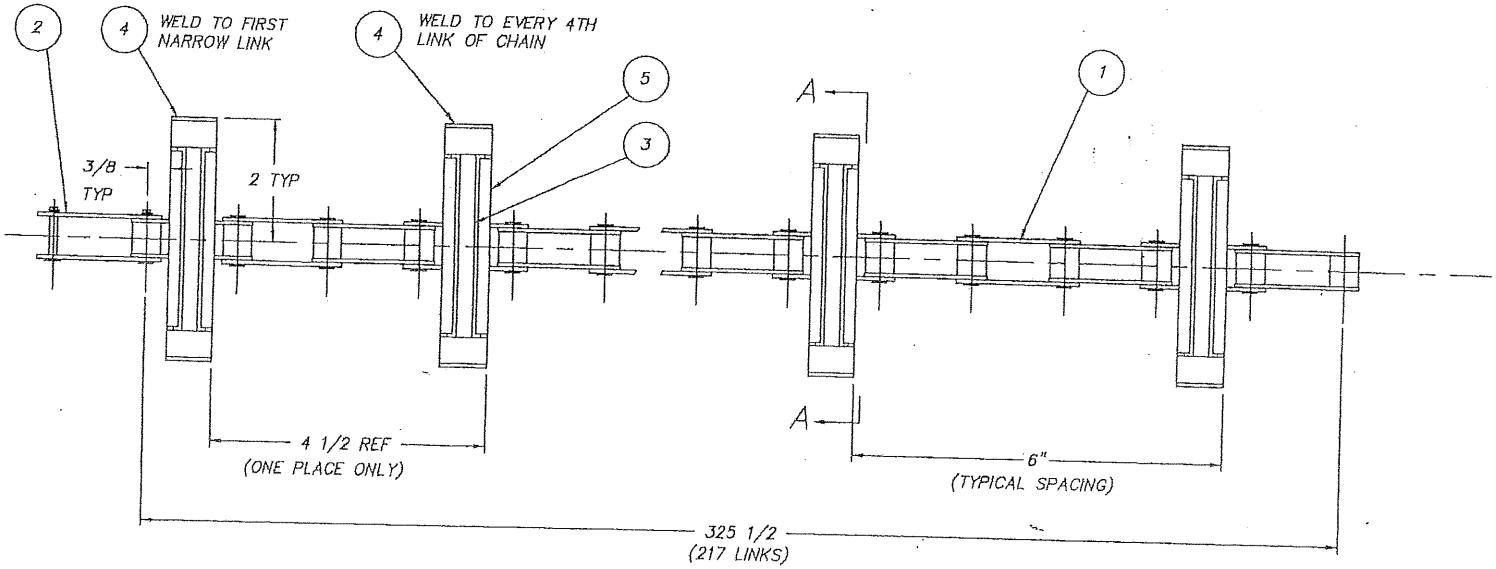

REV	ECN NO	DATE

FILE: PARTS\1512–72

TOLERANCES
FRACTIONS ±1/64
DECIMALS
.XXX ± .005
.XX ± .01
ANGLES ±1/2°
UNLESS OTHERWISE SPECIFIED

TITLE: CHAIN ASSEMBLY WITH INTEGRAL DRYER

MAT'L: AS NOTED

NEXT ASSY: 1512–1
REQ'D: 1
SCALE: 1=2
DWG. NO.: 1512–72
USED ON: TRAC 878
DRWN/DATE: GP 8.24.01

Insinger
Philadelphia, PA 19135
(215) 624–4800
FAX (215) 624–6966

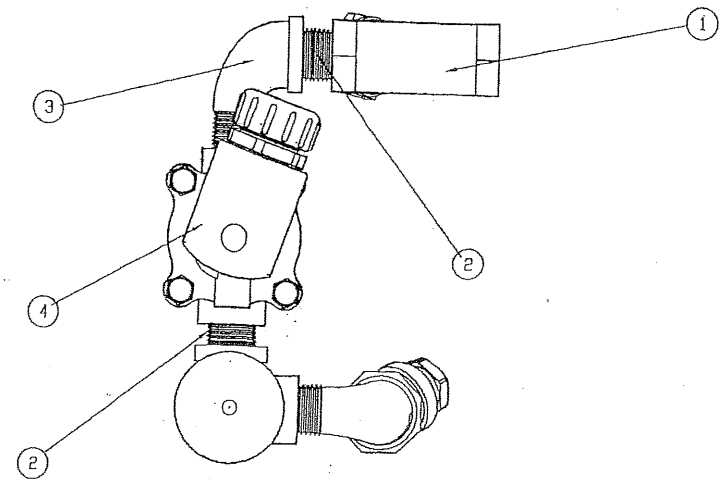

ITEM	PART NO.	SIZE	DESCRIPTION	QTY.
1	D2483A	–	"Y" STRAINER 1/2IPS	1
2	D314F–DC–00	–	CLOSE NIPPLE 1/2IPS	2
3	D316F–D1–D1	–	90%D STREET ELBOW 1/2IPS	3
4	D2606	–	SOLENOID VALVE 1/2IPS	1
5	D2914	–	VACUUM BREAKER 1/2IPS	1
6	D314F–DS–4B	–	NIPPLE 1/2IPS x 6"LG LOE	1
7	D326F–D1	–	LOCKNUT 1/2IPS	1
8	D315F–D1–D1	–	45° ELBOW 1/2FIPS	1
9	D328F–D2A	–	PLUG 1/2MIPS (WITH 1/16" HOLE)	1

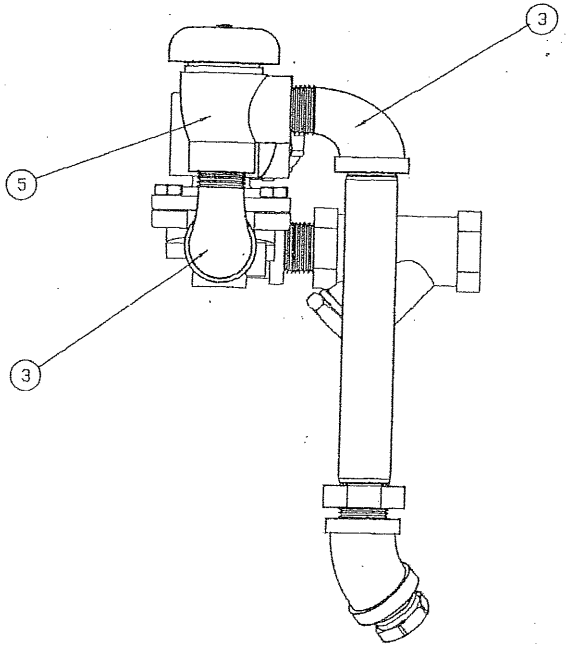

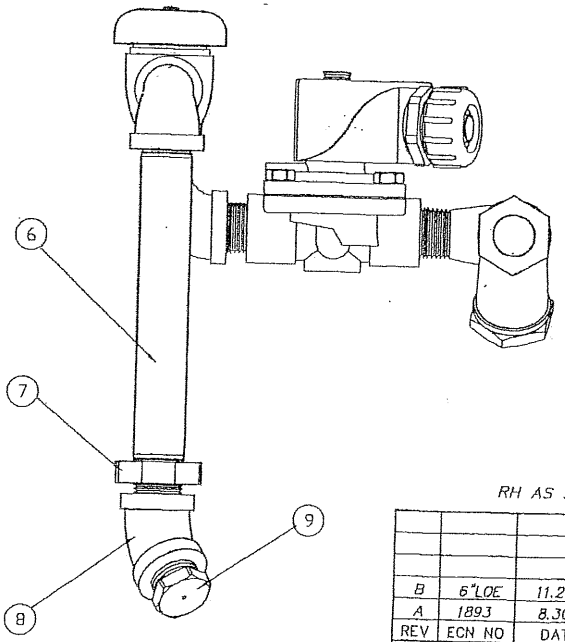

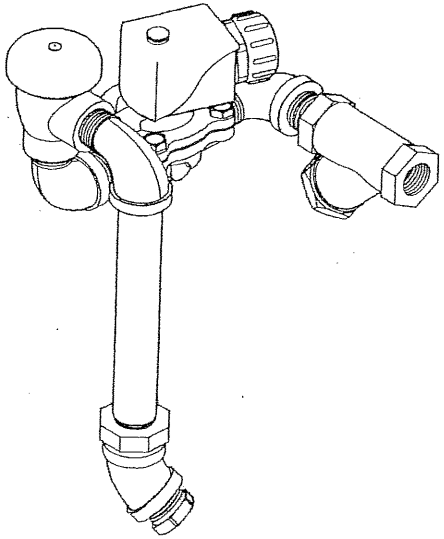

RH AS SHOWN, LH OPPOSITE

REV	ECN NO	DATE
B	6"LOE	11.20.01
A	1893	8.30.01

FILE: PARTS\1512–107

TOLERANCES
FRACTIONS ±1/64
DECIMALS
.XXX ± .005
.XX ± .01
ANGLES ±1/2°
UNLESS OTHERWISE SPECIFIED

TITLE COLD WATER FILL ASSEMBLY PREWASH TEMPERING

NEXT ASSY 1512–1
REQ'D 1
DWG. NO. 1512–107
MAT'L NOTED
SCALE 1=2
USED ON TRAC 878

Insinger
Philadelphia, PA 19135
(215) 624–4800
FAX (215) 624–6966

DRWN/DATE GP 7.26.01

ITEM	PART NO.	DESCRIPTION	QTY.
1	————	MOTOR, DAYTON 4Z130A	1
2	1512-97	PIVOT SHAFT MTG. PLATE	1
3	D2779	SPROCKET, 41B16	1
4	820-35	SPROCKET ASS'Y, IDLER	1
5	1512-98	DRIVE SHAFT ASS'Y.	1
6	D308C-41-CL	CHAIN, #41 x 53 LINKS	1
7	1512-66	COVER, GEAR MOTOR	1
8	1512-71	CHAIN ASS'Y (WASHER ONLY)	1
9	1361-136	IDLER ARM	1
10	1397-4	ADJUSTABLE SPRING STOP	1

ITEM	PART NO.	DESCRIPTION	QTY.
11	D2834	SPRING, COMPRESSION	1
12	DE5-4	MICROSWITCH	1
13	1512-100	MICROSWITCH BRACKET	1
14	D2771	BUSHING, 1 O.D. x 3/4 I.D.	1
15	D309C-HC-3	CAPSCREW, 5/16-18 x 3/4 LG.	1
16	D313C-H2	LOCKWASHER, 5/16	1
17	D3-824	WASHER, 5/16 I.D. x 1 1/8 O.D.	1
18	D312C-LC-1	HEX NUT 1/2-13	2
19	D309C-EF-4G	WELDSTUD #10-32 X 1/2	4
20	D312C-EF-5	LOCKNUT #10-32	4

ITEM	PART NO.	DESCRIPTION	QTY.
21	D308B-41-CL	CONNECTING LINK, #41 CHAIN	1
22	D311-1	COTTER PIN, 1/8 DIA. x 1 1/2 LG.	1
23	D2-525	WASHER, NYLON	1
24	D312C-GC-5	LOCKNUT, 1/4-20	11
25	D309C-GC-4	WELDSTUD, 1/4-20 x 1/2 LG.	10
26	1512-77	REINFORCEMENT CHANNEL	1
27	1512-101	BOOT STRAP BRACKET	1
28	D309C-GC-9	WELDSTUD, 1/4-20 X 1 1/8 LG	1
29	957-7	SEAL WASHER	3

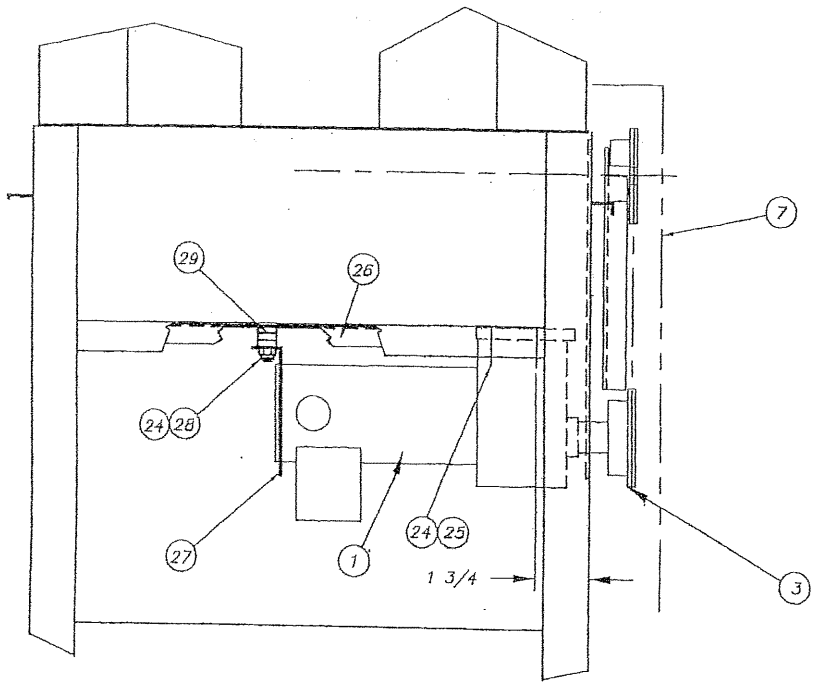

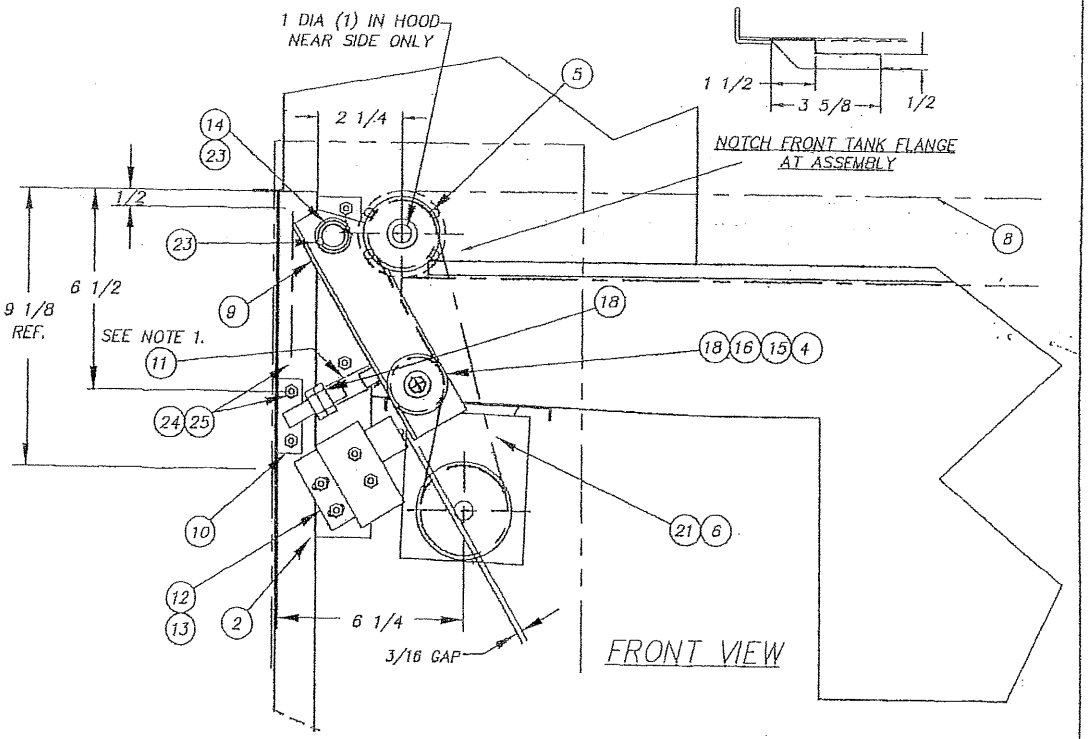

NOTES:

1. SPRING TO BE COMPRESSED TO 1 7/8" LG.
2. THIS DWG. WAS #1361-148 REV A. USE FOR CUSTOMERS REQUIRING VARIABLE SPEED DC DRIVE.

R.H. MACHINE SHOWN
L.H. MACHINE OPPOSITE

REV	ECN NO	DATE

FILE: PARTS\1512-90

TOLERANCES
FRACTIONS ±1/64
DECIMALS
.XXX ± .005
.XX ± .01
ANGLES ±1/2°
UNLESS OTHERWISE SPECIFIED

TITLE	DRIVE & CHAIN ASS'Y. TRAY WASHER W/O DRYER	NEXT ASSY	DWG. NO. 1512-90
		REQ'D 1	
MAT'L	DAYTON DC GEARMOTOR	SCALE 1=8	USED ON 321-3 RPW
Insinger	Philadelphia, PA 19135 (215) 624-4800 FAX (215) 624-6	DRWN/DATE GP 6.29.01	

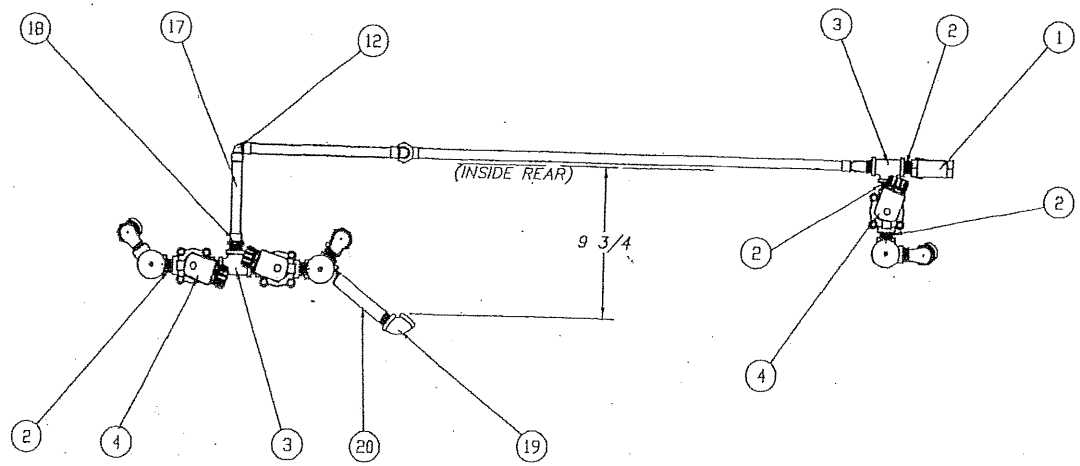

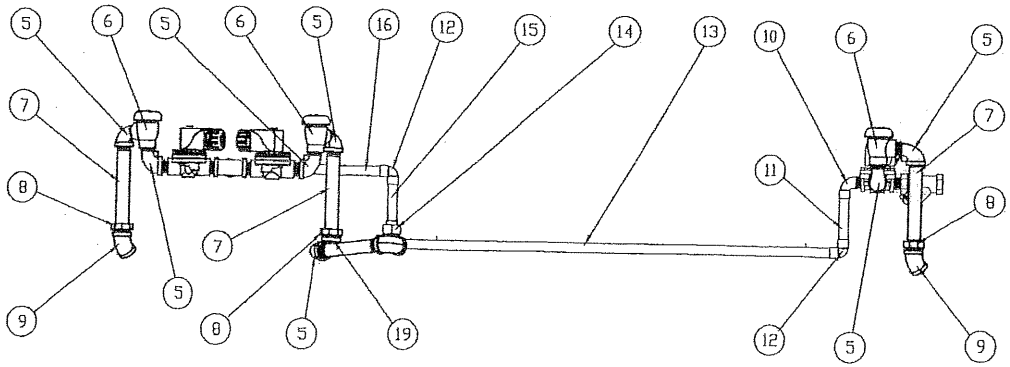

ITEM	PART NO.	SIZE	DESCRIPTION	QTY.
1	D2483A	–	"Y" STRAINER 1/2 IPS	1
2	D314F–DC–00	–	CLOSE NIPPLE 1/2 IPS	7
3	D320F–D1D1D1	–	TEE 1/2 IPS	2
4	D2606	–	SOLENOID 1/2 IPS	3
5	D316F–D1–D2	–	90° STREET ELBOW 1/2 IPS	7
6	D2914	–	VACUUM BREAKER 1/2 IPS	3
7	D314F–DL–48	–	NIPPLE LOE 1/2 IPS x 6" LG	3
8	D326F–D1	–	LOCKNUT 1/2 IPS	3
9	D315F–D1–D1	–	45° ELBOW 1/2 FIPS	2
10	D317A–D3–D2	–	90° ADAPTER ELBOW 1/2C x 1/2MIPS	1
11	D207A–B4–15	–	COPPER TUBING 1/2C x 3 3/4LG	1
12	D316A–D3–D3	–	90° ELBOW 1/2C x 1/2C	3
13	D207A–B4–117	–	COPPER TUBING 1/2C x29 1/4LG	1
14	D319A–D3–D3	–	90° UNION ELBOW 1/2C x 1/2C	1
15	D207A–B4–12	–	COPPER TUBING 1/2C x 3"LG	1
16	D207A–B4–40	–	COPPER TUBING 1/2C x 10"LG	1
17	D207A–B4–23	–	COPPER TUBING 1/2C x 5 3/4LG	1
18	D316A–D3–D2	–	ADAPTER 1/2C x 1/2MIPS	1
19	D316F–D1–D1	–	90° ELBOW 1/2 IPS	2
20	D314F–DS–44	–	NIPPLE 1/2 IPS x 5 1/2 LG	1

RH AS SHOWN, LH OPPOSITE

REV	ECN NO	DATE
C	11,13&15	8.27.01
B	1893	8.27.01
A	–	7.26.01

FILE: PARTS\1512–81

TOLERANCES
FRACTIONS ±1/64
DECIMALS
.XXX ± .005
.XX ± .01
ANGLES ±1/2°
UNLESS OTHERWISE SPECIFIED

TITLE: TANK FILL ASSEMBLY AUTOMATIC HOT WATER

NEXT ASSY: 1512–1
REQ'D: 1
DWG. NO.: 1512–81
MAT'L: NOTED
SCALE: 1:8
USED ON: TRAC 878

Insinger
Philadelphia, PA 19135
(215) 624–4800
FAX (215) 624–6966

DRWN/DATE: GP 5.3.01

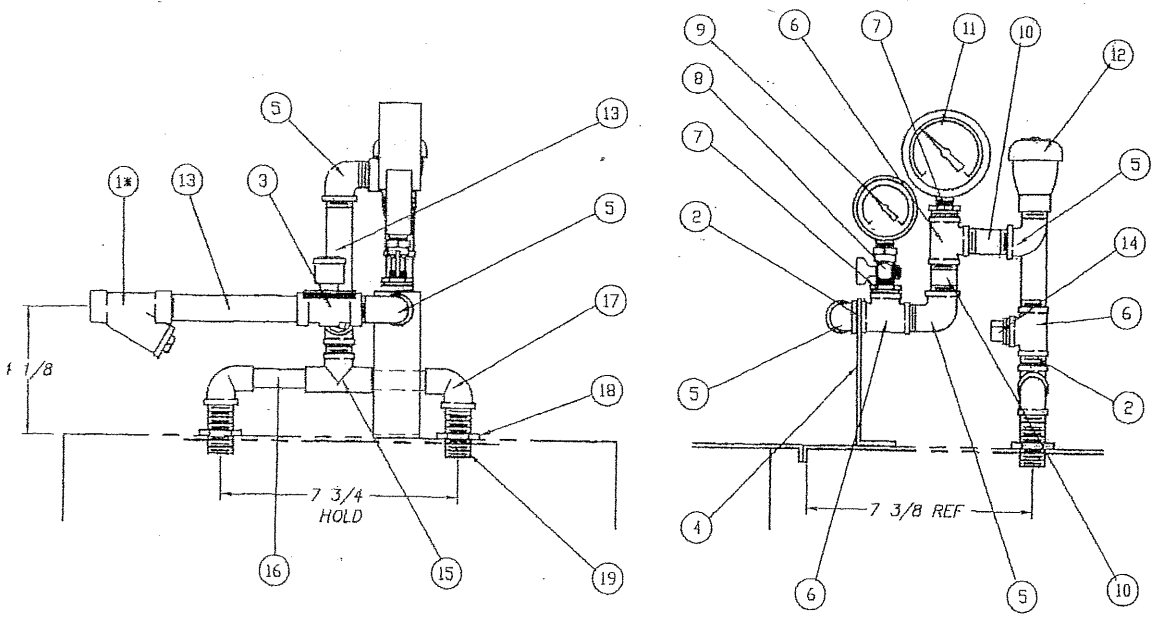

ITEM	PART NO.	SIZE	DESCRIPTION	QTY.
1*	D2483A	–	"Y" STRAINER 1/2 IPS	1*
2	D314F–DC–00	–	CLOSE NIPPLE 1/2 IPS	1
3	D2606	–	SOLENOID VALVE 1/2 IPS	1
4	951–79	A	BRACKET	1
5	D316F–D1–D2	–	90° STREET ELBOW 1/2 IPS	3
6	D320F–D1D1D1	–	TEE 1/2 IPS	3
7	D322F–D2–B1	–	HEX REDUCER 1/2 MIPS x 1/4 FIPS	2
8	D2497	–	PETCOCK 1/4 IPS	1
9	SK–1433	A	PPRESSURE GAUGE	1
10	D314F–DS–16	–	NIPPLE 1/2 IPS x 2" LG	2
11	D2495	–	TEMPERATURE GAUGE 1/4 IPS	1
12	D2914	–	VACUUM BREAKER 1/2 IPS	1
13	D314F–DS–32	–	NIPPLE 1/2 IPS x 4" LG	2
14	D328F–D2A	–	PIPE PLUG 1/2 IPS	1
15	D320A–D3D3D1	–	TEE 1/2 C x 1/2 C x 1/2 IPS	1
16	D207A–K4–11	–	COPPER TUBE 1/2 X 2 3/4 LG	2
17	D316A–D3–D1	–	90° ELBOW 1/2 C x 1/2 IPS	2
18	D314F–DA–16	–	NIPPLE 1/2 IPS X 2" ALL THREAD	2
19	D326F–D1	–	LOCKNUT 1/2 IPS	2

*ITEM 1 TO BE OMITTED FOR UUNITS WITH A BOOSTER.

RH AS SHOWN, LH OPPOSITE

REV	ECN NO	DATE
C	*	11.20.01
B	1893	8.27.01
A	–	8.7.01

FILE: PARTS\1512–74

TOLERANCES
FRACTIONS ±1/64
DECIMALS
.XXX ± .005
.XX ± .01
ANGLES ±1/2°
UNLESS OTHERWISE SPECIFIED

TITLE: PIPING ASS'Y, FINAL RINSE (TOP OF MACHINE)

NEXT ASSY: 1512–1
REQ'D: 1
DWG. NO.: 1512–74
MAT'L: NOTED
SCALE: 1:4
USED ON: TRAC 878

Insinger
Philadelphia, PA 19135
(215) 624–4800
FAX (215) 624–6966

DRWN/DATE: GP 5.2.01

ITEM	PART NO.	SIZE	DESCRIPTION	QTY. STD	QTY. TRAY 19
1	963-11	A	DISCH. NIPPLE	1	1
2	D326J-H1	–	LOCKNUT 1 1/2 IPS	1	1
3	1072-14R	B	DISCH. MANIFOLD	1	1
4	970-25A	A	SPRAY PIPE EXTENSION	2	2
5	562-87A	A	LOCKING SCREW	2	2
6	1512-65	B	SPRAY PIPE 19 5/8 LONG	2	–
			SPRAY PIPE 24 5/8 LONG	–	2
7	D-2910	–	SPRAY NOZZLE H 1/4 U-6570	10	12
8	D2-554-2	A	PLUG 3/4-10 UNC-2A	2	2
9	D2-570	–	"O" RING (01-020)	2	2
10	970-53	A	BRACKET- DISCH. LINE	2	2

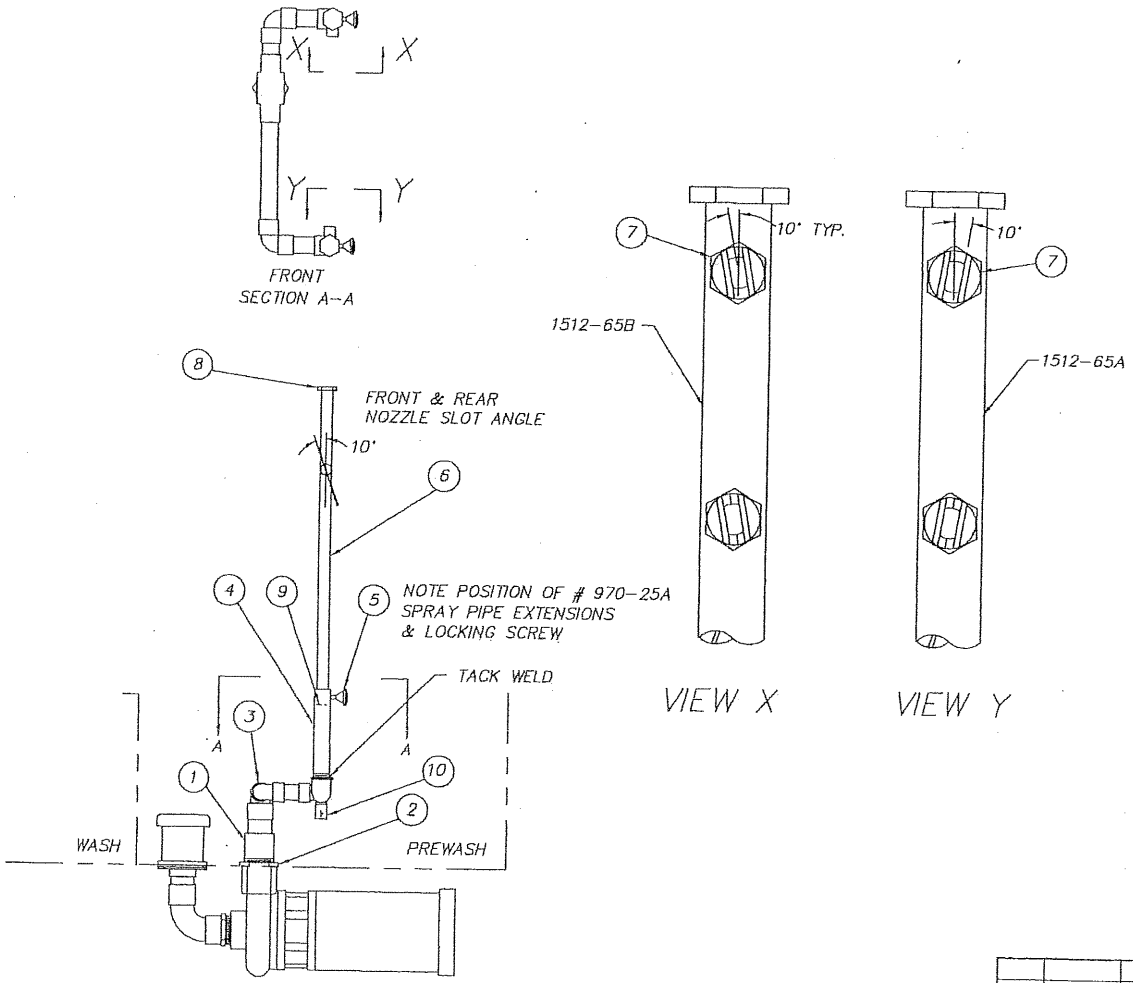

R.H. MACH. ONLY

REV	ECN NO	DATE
B	TRAY 19	1.4.02
A	–	7.26.01

FILE: PARTS\1512-63

TOLERANCES
FRACTIONS ±1/64
DECIMALS
.XXX ± .005
.XX ± .01
ANGLES ±1/2°
UNLESS OTHERWISE SPECIFIED

TITLE: DISCHARGE LINE ASSY R.H. PREWASH

NEXT ASSY: 1512-1
REQ'D: 1

DWG. NO.: 1512-63

MAT'L: NOTED

SCALE: 1=8

USED ON: TRAC 878

Insinger
Philadelphia, PA 19135
(215) 624-4800
FAX (215) 624-6966

DRWN/DATE: GP 5.2.01

ITEM	PART NO.	SIZE	DESCRIPTION	QTY. STD	QTY. TRAY 19
1	963-11	A	DISCH. NIPPLE	1	1
2	D326J-H1	–	LOCKNUT 1 1/2 IPS	1	1
3	1072-14R	B	DISCH. MANIFOLD	1	1
4	970-25A	A	SPRAY PIPE EXTENSION	2	2
5	562-87A	A	LOCKING SCREW	2	2
6	1512-65	B	SPRAY PIPE 19 5/8 LONG	2	–
			SPRAY PIPE 24 5/8 LONG	–	2
7	D-2910	–	SPRAY NOZZLE H 1/4 U-6570	10	12
8	D2-554-2	A	PLUG 3/4-10 UNC-2A	2	2
9	D2-570	–	"O" RING (01-020)	2	2
10	970-53	A	BRACKET- DISCH. LINE	2	2

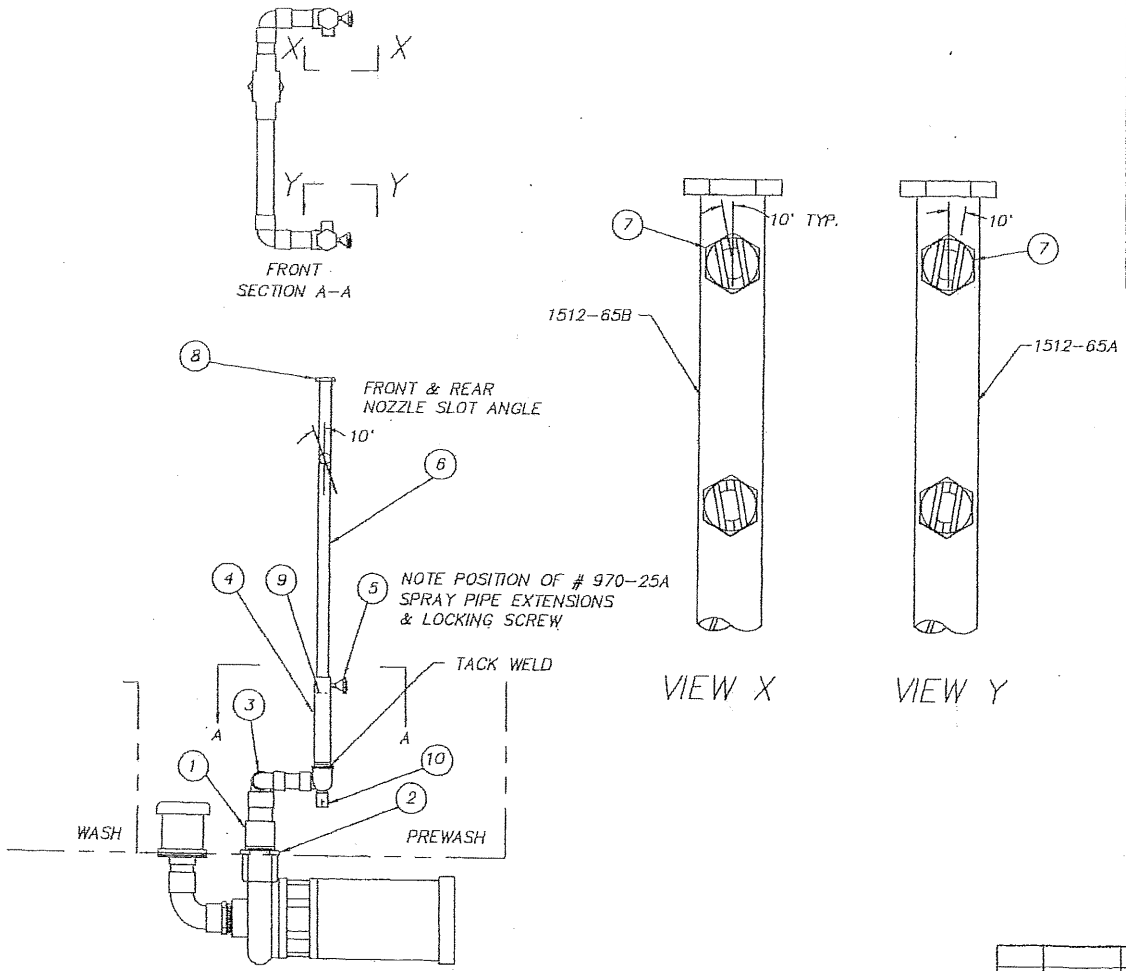

R.H. MACH. ONLY

			TOLERANCES	TITLE DISCHARGE LINE ASSY R.H. PREWASH	NEXT ASSY 1512-1	DWG. NO. 1512-63
			FRACTIONS ±1/64 DECIMALS .XXX ± .005 .XX ± .01 ANGLES ±1/2° UNLESS OTHERWISE SPECIFIED		REQ'D 1	
B	TRAY 19	1.4.02		MAT'L NOTED	SCALE 1=8	USED ON TRAC 878
A	–	7.26.01		Insinger Philadelphia, PA 19135 (215) 624-4800 FAX (215) 624-69		DRWN/DATE GP 5.2.01
REV	ECN NO	DATE				
FILE: PARTS\1512-63						

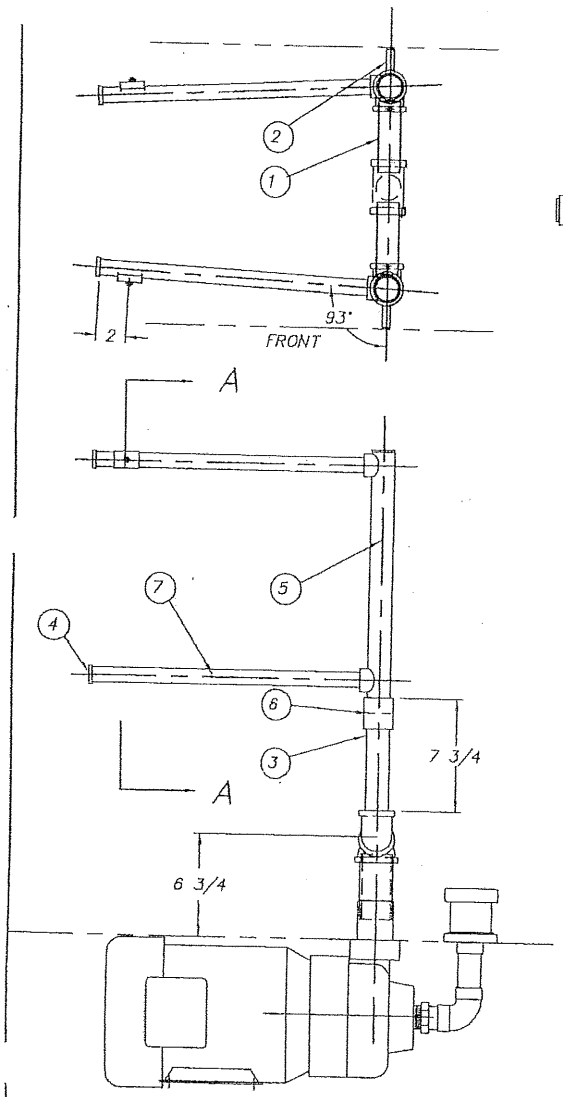

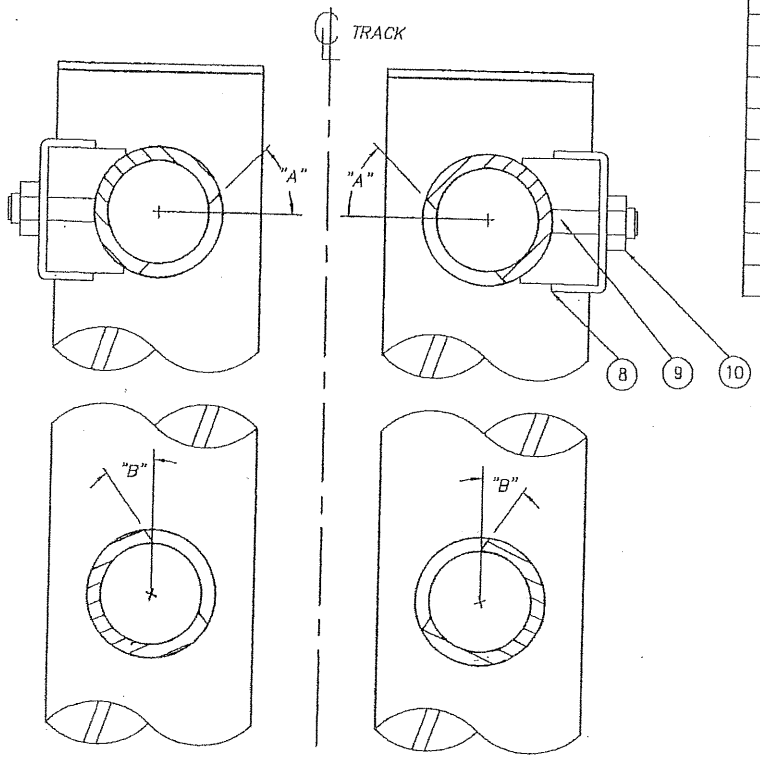

SECTION A–A

ITEM	PART NO.	SIZE	DESCRIPTION	QTY.
1	1176–17	B	DISCHARGE MANIFOLD	1
2	1094–17	A	BRACKET – DISCH. LINE	2
3	1512–56	A	EXTENSION – MANIFOLD	2
4	D2–554–2	A	PLUG 3/4–10	4
5	1512–57	A	SPRAY MANIFOLD (LENGTH DIFFERS)	2
6	D–584	–	"O: RING (01–026)	2
7	1512–58	A	SPRAY PIPES	4
8	1512–105	A	ANGLE STOP – WASH SPPRAY PIPE	2
9	D309–EF–6G	–	WELD STUD 10–32 X 3/4	2
10	D312C–EF–5	–	SEAL NUT 10–32	2

	STANDARD	TRAY 19
A	45°	50°
B	35°	0°

R.H. SHOWN L.H. OPPOSITE

REV	ECN NO	DATE
B	TRAY 19	1.4.02
A	–	8.03.01

FILE: PARTS\1512–5

TOLERANCES
FRACTIONS ±1/64
DECIMALS
.XXX ± .005
.XX ± .01
ANGLES ±1/2°
UNLESS OTHERWISE SPECIFIED

TITLE DISCHARGE LINE ASSEMBLY WASH

NEXT ASSY 1512–1
REQ'D 1
DWG. NO. 1512–55
MAT'L NOTED
SCALE 1=8
USED ON TRAC 878

Insinger
Philadelphia, PA 19135
(215) 624–4800
FAX (215) 624–6966

DRWN/DATE GP 5.1.01

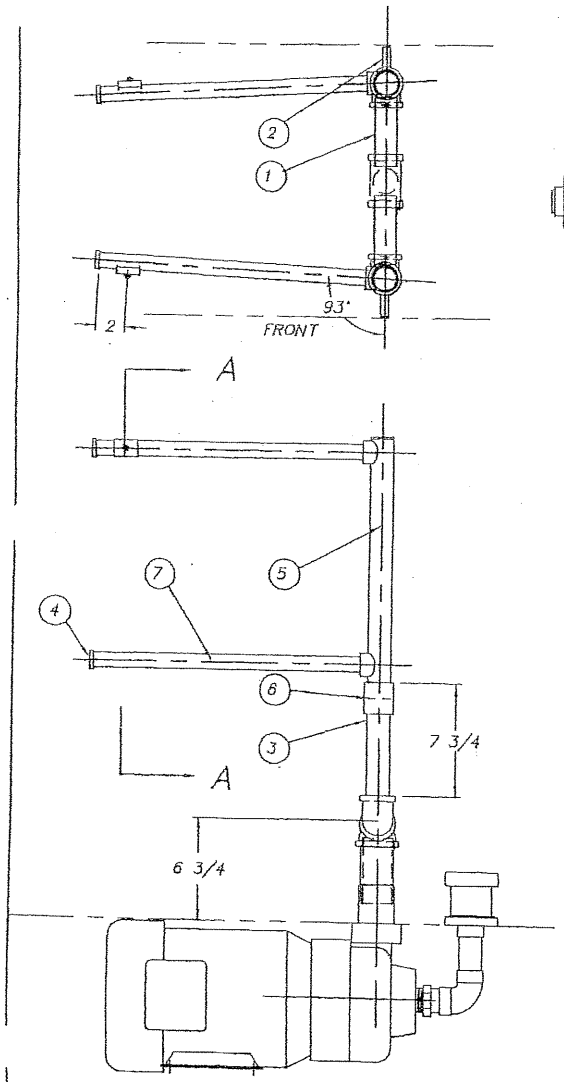

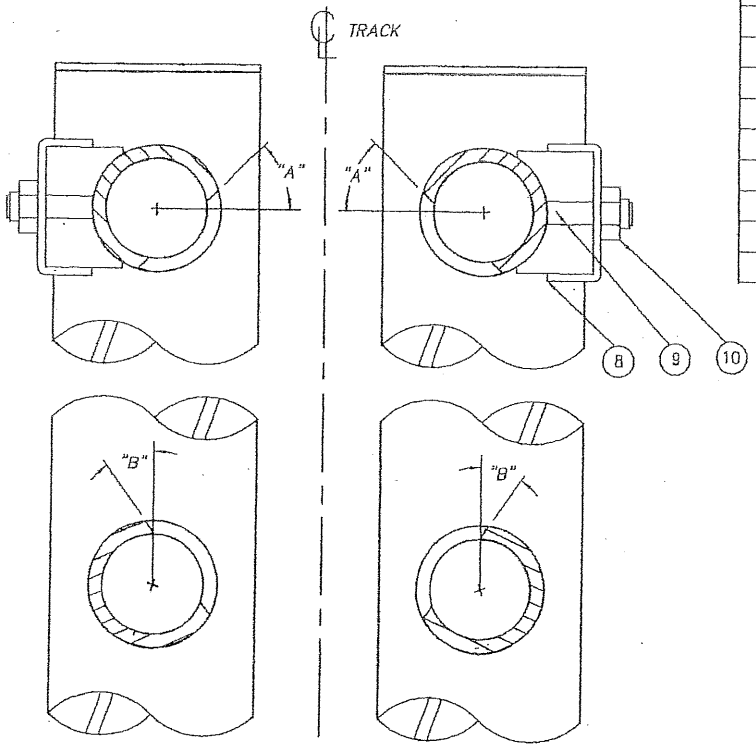

SECTION A–A

ITEM	PART NO.	SIZE	DESCRIPTION	QTY.
1	1176–17	B	DISCHARGE MANIFOLD	1
2	1094–17	A	BRACKET – DISCH. LINE	2
3	1512–56	A	EXTENSION – MANIFOLD	2
4	D2–554–2	A	PLUG 3/4–10	4
5	1512–57	A	SPRAY MANIFOLD (LENGTH DIFFERS)	2
6	D–584	–	"O: RING (01–026)	2
7	1512–58	A	SPRAY PIPES	4
8	1512–105	A	ANGLE STOP – WASH SPPRAY PIPE	2
9	D309–EF–6G	–	WELD STUD 10–32 X 3/4	2
10	D312C–EF–5	–	SEAL NUT 10–32	2

	STANDARD	TRAY 19
A	45°	50°
B	35°	0°

R.H. SHOWN L.H. OPPOSITE

REV	ECN NO	DATE
B	TRAY 19	1.4.02
A	–	8.03.01

FILE: PARTS\1512–5

TOLERANCES
FRACTIONS ±1/64
DECIMALS
.XXX ± .005
.XX ± .01
ANGLES ±1/2°
UNLESS OTHERWISE SPECIFIED

TITLE DISCHARGE LINE ASSEMBLY WASH

MAT'L NOTED

NEXT ASSY 1512–1
REQ'D 1
SCALE 1=8
USED ON TRAC 878

DWG. NO. 1512–55

DRWN/DATE GP 5.1.01

Insinger
Philadelphia, PA 19135
(215) 624–4800
FAX (215) 624–6

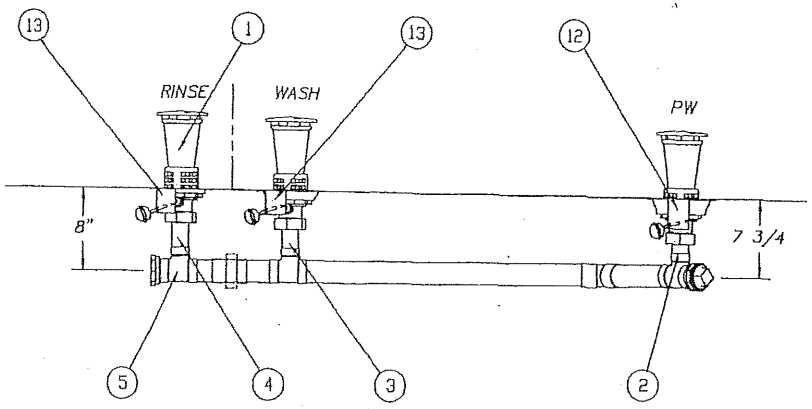

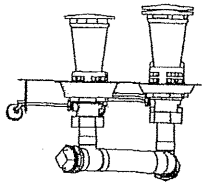

ITEM	PART NO.	SIZE	DESCRIPTION	QTY.
1	954-1	B	DRAIN ASSEMBLY	3
2	D207A-B12-12	–	COPPER TUBE 1 1/2 CTS X 3" LG	1
3	D207A-B12-15	–	COPPER TUBE 1 1/2 CTS X 3 3/4 LG	1
4	D207A-B12-18	–	COPPER TUBE 1 1/2 CTS X 4 1/2 LG	1
5	D320A-J3J3H3	–	TEE 2C X 2C X 1 1/2C	3
6	D207A-B16-35	–	COPPER TUBE 2" CTS X 8 3/4 LG	1
7	D315A-J3-J3	–	45° ELBOW 2C X 2C	1
8	D207A-B16-114	–	COPPER TUBE 2"CTS X 28 1/2 LG	1
9*	D207A-B16-32	–	COPPER TUBE 2" CTS X 8" LG	1*
10	D317A-J4-J1	–	ADAPTER 2FTG X 2FIPS	2
11	D328F-J2A	–	PIPE PLUG 2"IPS	1
12	954-8A	A	BRACKET – DRAIN HANDLE	1
13	954-8B	A	BRACKET – DRAIN HANDLE	2
14	–	–	–	–
15	1100-79	B	DRAIN HANDLE ASS'Y	1
16	1512-59	B	DRAIN HANDLE ASS'Y	2
17*	D207A-B16-14	–	COPPER TUBE 2"CTS x 3 1/2LG	2*
18*	D318A-J3-J3	–	UNION 2"CTS x 2"CTS	1*

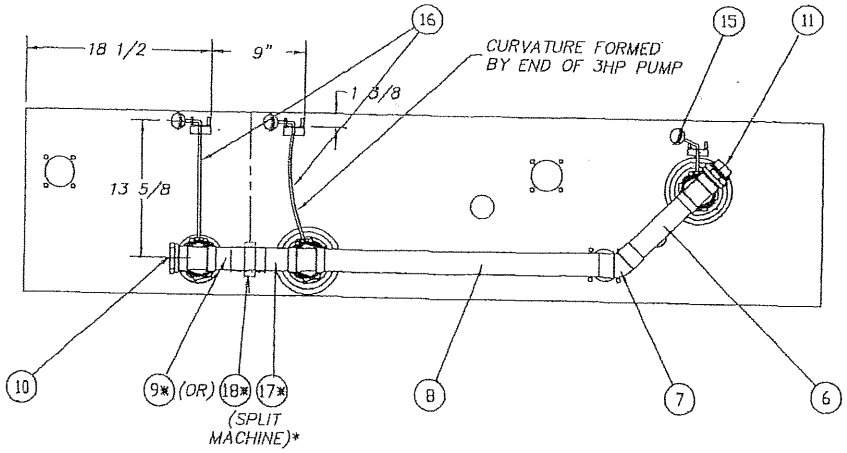

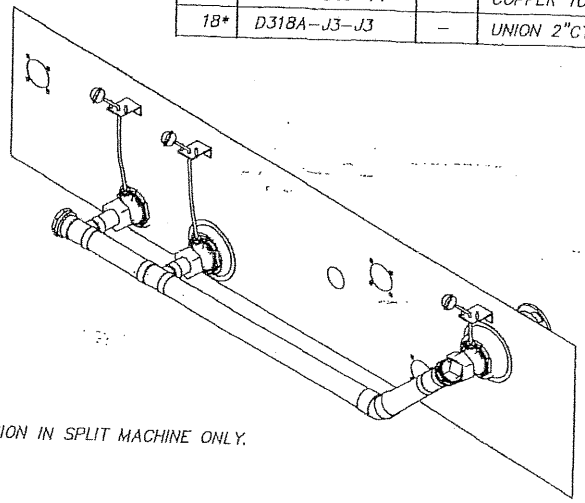

*UNION IN SPLIT MACHINE ONLY.

REV	ECN NO	DATE
B	–	8.20.01

FILE: PARTS\1512-53

TOLERANCES
FRACTIONS ±1/64
DECIMALS
.XXX ± .005
.XX ± .01
ANGLES ±1/2°
UNLESS OTHERWISE SPECIFIED

TITLE: DRAIN ASSEMBLY – RH (SINGLE DRAIN WHEN SPEC'D)

MAT'L: NOTED

NEXT ASSY: 1512-1
REQ'D: 1
SCALE: 1"=1'
USED ON: 321-3 RPW
DWG. NO.: 1512-53
DRWN/DATE: GP 5.9.01

Insinger
Philadelphia, PA 19135
(215) 624-4800
FAX (215) 624-6966

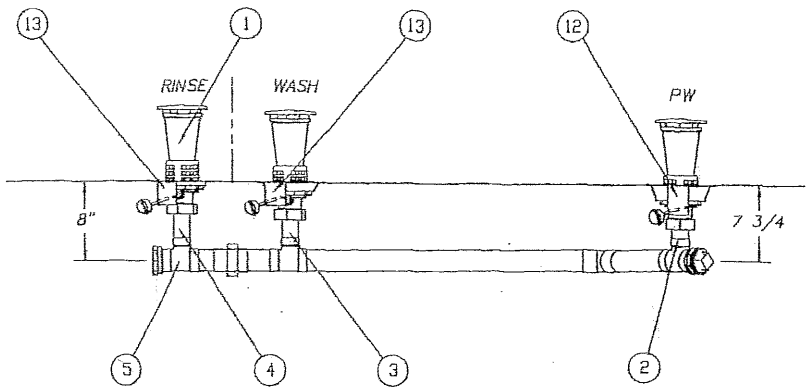

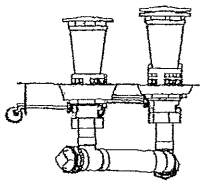

ITEM	PART NO.	SIZE	DESCRIPTION	QTY.
1	954-1	B	DRAIN ASSEMBLY	3
2	D207A-B12-12	-	COPPER TUBE 1 1/2 CTS X 3" LG	1
3	D207A-B12-15	-	COPPER TUBE 1 1/2 CTS X 3 3/4 LG	1
4	D207A-B12-18	-	COPPER TUBE 1 1/2 CTS X 4 1/2 LG	1
5	D320A-J3,J3H3	-	TEE 2C X 2C X 1 1/2C	3
6	D207A-B16-35	-	COPPER TUBE 2" CTS X 8 3/4 LG	1
7	D315A-J3-J3	-	45° ELBOW 2C X 2C	1
8	D207A-B16-114	-	COPPER TUBE 2"CTS X 28 1/2 LG	1
9*	D207A-B16-32	-	COPPER TUBE 2" CTS X 8" LG	1*
10	D317A-J4-J1	-	ADAPTER 2FTG X 2FIPS	2
11	D328F-J2A	-	PIPE PLUG 2"IPS	1
12	954-8A	A	BRACKET - DRAIN HANDLE	1
13	954-8B	A	BRACKET - DRAIN HANDLE	2
14	-	-	-	-
15	1100-79	B	DRAIN HANDLE ASS'Y	1
16	1512-59	B	DRAIN HANDLE ASS'Y	2
17*	D207A-B16-14	-	COPPER TUBE 2"CTS x 3 1/2LG	2*
18*	D318A-J3-J3	-	UNION 2"CTS x 2"CTS	1*

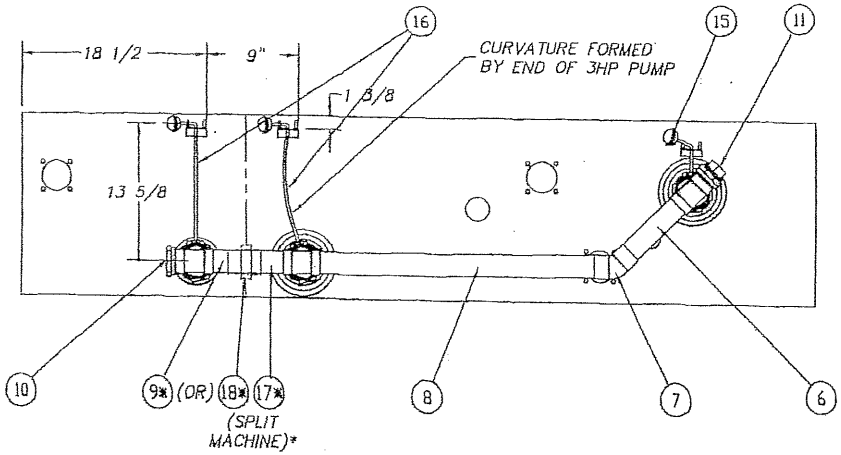

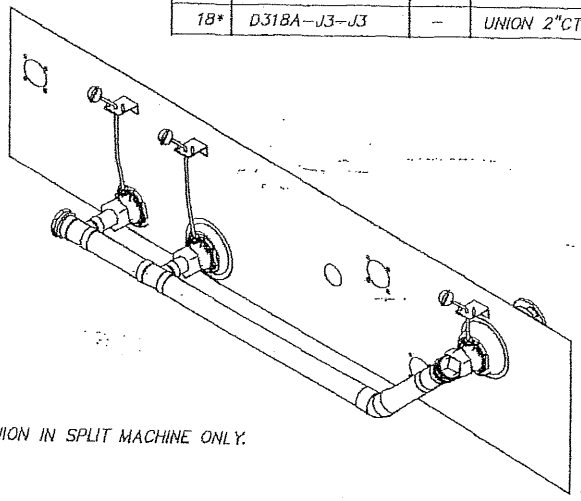

*UNION IN SPLIT MACHINE ONLY.

REV.	ECN NO	DATE
B	-	8.20.01

FILE: PARTS\1512-53

TOLERANCES
FRACTIONS ±1/64
DECIMALS
.XXX ± .005
.XX ± .01
ANGLES ±1/2°
UNLESS OTHERWISE SPECIFIED

TITLE DRAIN ASSEMBLY - RH (SINGLE DRAIN WHEN SPEC'D)

NEXT ASSY 1512-1
REQ'D 1

DWG. NO. 1512-53

MAT'L NOTED

SCALE 1"=1'

USED ON 321-3 RPW

Insinger
Philadelphia, PA 19135
(215) 624-
FAX (215) 624

DRWN/DATE GP 5.9.01

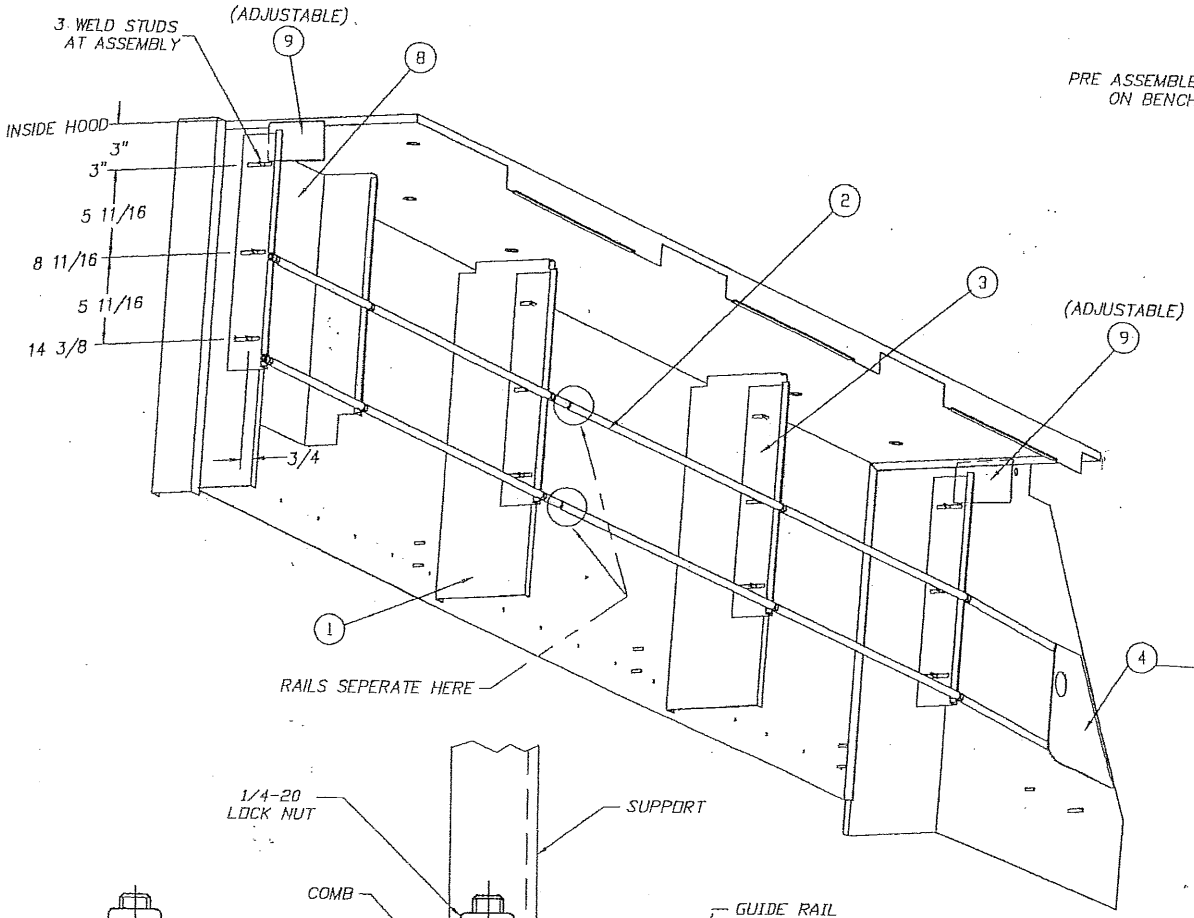

ITEM	PART NO.	SIZE	DESCRIPTION	QTY.
1	1512-85	B	SIDE BAFFLE	2 PR
2	1512-83	B	GUIDE RAIL	4
3	1512-84	B	COMB & SUPPORT - GUIDE RAIL	5 PR
4	1512-87	B	ENTRANCE FENDER	1 PR
5	1512-88	A	SPACER - ENTRANCE FENDER	2*
6	1512-89	B	BRACKET - PHOTOELECTRIC EYE	2*
7	1512-89	B	COVER - PHOTOELECTRIC EYE	2*
8	1512-86	B	FINAL RINSE BAFFLE	2
9	NO DRAWING	-	CHOKE PLATE, 22GA 2 3/4 X 6 1/2	2

PRE ASSEMBLE ON BENCH

*OMITT ITEMS 5,6 & 7 UNLESS PHOTOELECTRIC EYE IS ORDERED.

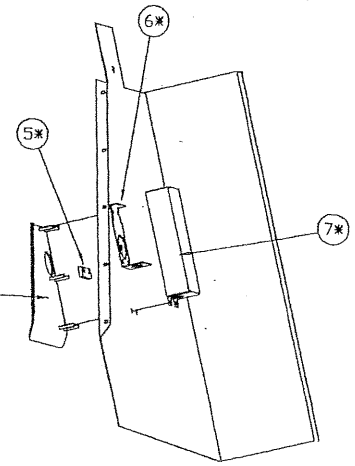

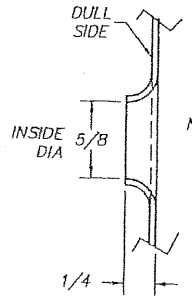

NOTE:
USE 1" DIA BALL FOR EXTRUSION

3/8 DIA HOLE EXTRUDED DOWN

(EXTRUSION IS OPTIONAL: HOLE TO BE OMITTED WHEN ELECTRIC EYE IS NOT USED)

NOTE:
IF ELECTRIC EYE IS ORDERED: LOCATE AND DRILL 3 HOLES EACH SIDE USING ITEM 6 AS LOCATING TEMPLATE. EYE HOLE IS 3/8 DIA. STUD HOLES ARE 1/4 DIA. ADD 2 STUDS TO ITEM 4 AT MARKS (10-32 X 3/4) FOR PHOTOELECTRIC EYE OPPTION ONLY.

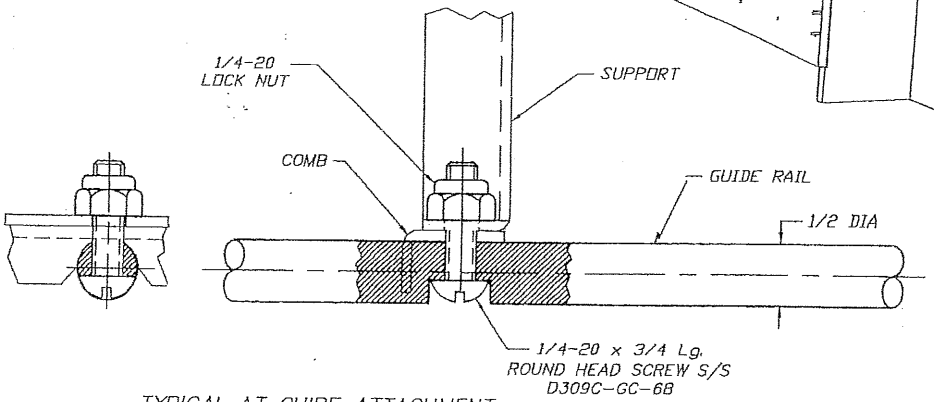

TYPICAL AT GUIDE ATTACHMENT
SCALE: 1=1

RH REAR AS SHOWN, OPPOSITE HAND IN FRONT - LH ASS'Y IS OPOSITE

REV	ECN NO	DATE
B	CHOKES	11.20.01
A	-	7.26.01

FILE: PARTS\1512-82

TOLERANCES
FRACTIONS ±1/64
DECIMALS
.XXX ± .005
.XX ± .01
ANGLES ±1/2°
UNLESS OTHERWISE SPECIFIED

TITLE: GUIDE RAIL INSTALLATION
-
MAT'L: NOTED
NEXT ASSY: 1512-1
REQ'D: 1
SCALE: 1:8
DWG. NO. 1512-82
USED ON: TRAC 878
DRWN/DATE: GP 5.11.01

Insinger
Philadelphia, PA 19135
(215) 624-4800
FAX (215) 624-6966

MODEL	"A" DIM.
SPEEDER 86-3	–
SPEEDER 64	–
TRAC 321	8
TRAC 321 RPW	–
MASTER	–
CLIPPER	–
CENTURY	–
DEFENDER	–
MODULAR	–
18-3	7 1/4
CA3	11 1/4
DA-3	11 1/4
SUPER 106-2	–

MODEL	ITEM # 14	ITEM # 15	ITEM # 16	LENGTH
SPEEDER 86-3	1100-79	954-8 954-8A 954-8B		
SPEEDER 64	1100-79	954-8 954-8B		
TRAC 321	970-55	954-8	D207A-B12-16	4"
TRAC 321 RPW	970-55	954-8A 954-8		
MASTER	1100-79 ***	954-8A 954-8 (2 PCS)		
CLIPPER	1100-79	954-8A 954-8 (2 PCS)		
CENTURY	1100-79	954-8A 954-8 (2 PCS)		
DEFENDER	1100-79 ***	954-8A 954-8		
MODULAR	954-5	954-8	SEE 975-108	
18-5	1100-79A	954-8C	D207A-B12-17	4 1/4
CA-3	925-52	954-8	D207A-B12-33	8 1/4
DA-3	925-52	954-8	D207A-B12-33	8 1/4
SUPER 106-2	954-5	954-8A P.W.	D207A-B12-17	4 1/4
SUPER 106-2	954-5	954-8 WASH	D207A-B12-20	5
SUPER 106-2	954-5	954-8 RINSE	D207A-B12-22	5 1/2

	ITEM	PART NO.	SIZE	DESCRIPTION	QTY.
	1	954-50A	A	UPPER BODY	1
	2	954-50B	A	LOWER BODY	1
	3	954-50C	A	NUT	1
**) NOTE	4	954-50D	A	OVERFLOW TUBE	1
	5	D-193	A	SKIMMER CAP	1
	6	D2-557	–	"U" CUP SEAL	1
	7	D2-548	–	"O" RING	1
	8	D2-549	–	"O" RING	1
	9	D2-550	–	"O" RING	1
	10	D305	–	DRAIN LOCKING NUT	1
	11	D2-507	–	BALL	1
	12	–	–	–	–
*) NOTE	13	D316A-H3-H1	–	90° ELL 1 1/2 C X 1 1/2 FIPS	1
	14	SEE TABLE	A	DRAIN HANDLE ASS'Y	1
	15	SEE TABLE	A	BRACKET	1
	16	SEE TABLE	–	COPPER TUBING 1 1/2 CTS	1

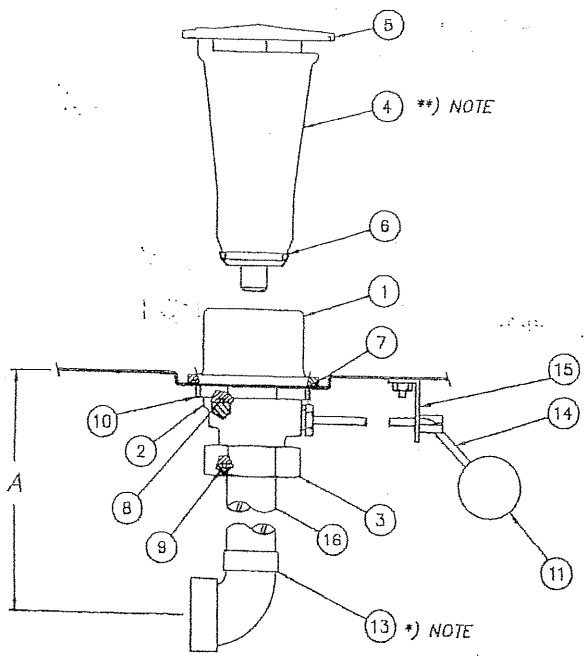

MODEL	REQ'D \ MACH.
SPEEDER 86-3	3
SPEEDER 64	2
TRAC 321	1
TRAC 321 RPW	2
MASTER	3
CLIPPER	3
CENTURY	3
DEFENDER	2
MODULAR	2
18-5	1
CA-3	1
DA-3	2
SUPER 106-2	

*) NOTE:

1. NOT REQUIRED WHEN COMMON DRAIN.
2. ON TRAC 321 & TRAC 321 RPW WHEN TRAY DRYER IS USED SEE 1361-47.

**) NOTE:

FOR MODEL 18-3 USE OVERFLOW TUBE (~1" LONGER) DWG#: 1169-179D

***) NOTE:

SEE #1478-35 FOR GAS HEATED MASTER/DEFENDER

REV	ECN NO	DATE
H	1880	6.19.01
G	1492	10.23.96
F	1442	8.8.96
E	1389	3.4.96
D	1268	9.22.95

FILE: PARTS\954-1

TOLERANCES: FRACTIONS ±1/64, DECIMALS .XXX ± .005, .XX ± .01, ANGLES ±1/2° UNLESS OTHERWISE SPECIFIED

TITLE: DRAIN ASSEMBLY

MAT'L: NOTED

NEXT ASSY: –

REQ'D: 1

SCALE: 1=4

DWG. NO.: 954-1

USED ON: SEE ABOVE

DRWN/DATE: RAF 11.27.84

Insinger
Philadelphia, PA 19135
(215) 624-480
FAX (215) 624-E

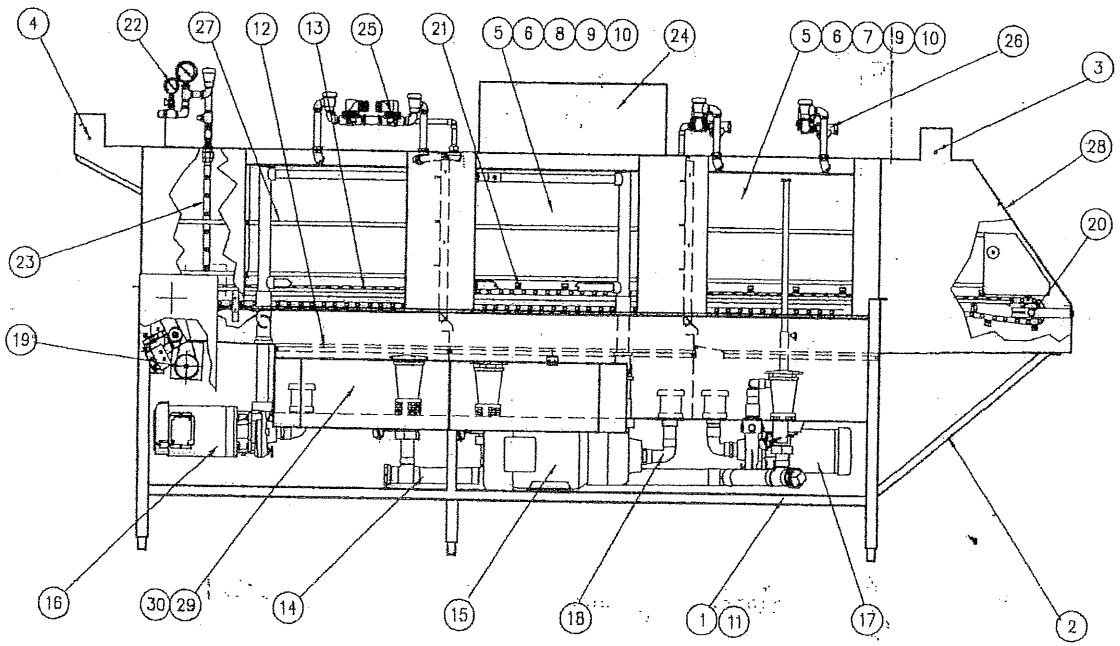

ITEM	PART NO.	SIZE	DESCRIPTION	QTY.
1	1512-5*	B	WELDMENT, SHELL, LEG & FRAME -1 PC	1
2	1448-4	B	STRUT - LOAD SECTION	2
3	1512-37	B	VENT DAMPER - LOAD	1
4	1512-38	B	VENT DAMPER - UNLOAD	1
5	1512-39*	B	DOOR CHANNELS	6
6	1472-25*	A	GASKET - DOOR CHANNELS	6
7	1512-40*	B	DOOR - PREWASH	1
8	1512-41*	B	DOOR - WASH/RINSE	2
9	D2715A	A	DOOR LATCH	6
10	977-47	A	ACTUATOR - DOOR INTERLOCK	3
11	1512-79	B	WEIR PLATE PLACEMENT	1
12	1512-44	B	SCRAP SCREEN LOCATIONS	1
13	1512-53*	B	TRACK LOCATION	1
14	1512-53	B	DRAIN ASS'Y - R.H. SINGLE POINT	1
15	1512-55*	B	DISCHARGE LINE ASSEMBLY, WASH	1
16	1512-60*	B	DISCHARGE LINE ASSEMBLY, RINSE	1
17	1512-63*	B	DISCHARGE LINE ASS'Y, R.H. PREWASH	1
18	1512-43	A	SUCTION LINE ASSEMBLY	1
19	1512-90	B	DRIVE MECHANISM (WITHOUT DRYER)	1
20	1512-68	B	FOLLOWER SHAFT ASSEMBLY	1
21	1512-71	B	CHAIN ASSEMBLY (TRAY WASHER ONLY)	1
22	1512-74	B	PIPING ASS'Y - FINAL RINSE (EXT.)	1
23	1512-104*	B	SINGLE PIPE FINAL RINSE ASSEMBLY	1
24	SK-4471	B	CONTROL PANEL LAYOUT	1
25	1512-81	B	TANK FILL ASSEMBLY - AUTOMATIC	1
26	1512-107	B	TEMPERING FILL ASSEMBLY - PREWASH	1
27	1512-82	B	GUIDE RAIL & BAFFLE INSTALLATION	1
28	1512-91*	B	FRAME - ENTRANCE	1
29	1512-93	B	BACK PLATE - HEATER COVERS	1
30	1512-94	B	COVER - HEATERS	1

*DRAWINGS TABULATED FOR HEIGHT OPTION

REV	ECN NO	DATE
A	5"X-HI	9.28.01

FILE: PARTS\1512-1

TOLERANCES
FRACTIONS ±1/64
DECIMALS
.XXX ± .005
.XX ± .01
ANGLES ±1/2°
UNLESS OTHERWISE SPECIFIED

TITLE: GENERAL ASSEMBLY TRAC 878 RH (WASHER ONLY)

MAT'L: NOTED

NEXT ASSY: —
REQ'D: 1
SCALE: 1:16
DWG. NO.: 1512-1
USED ON: TRAC 878
DRWN/DATE: GP 8.30.01

Insinger
Philadelphia, PA 19135
(215) 624-4800
FAX (215) 624-6966

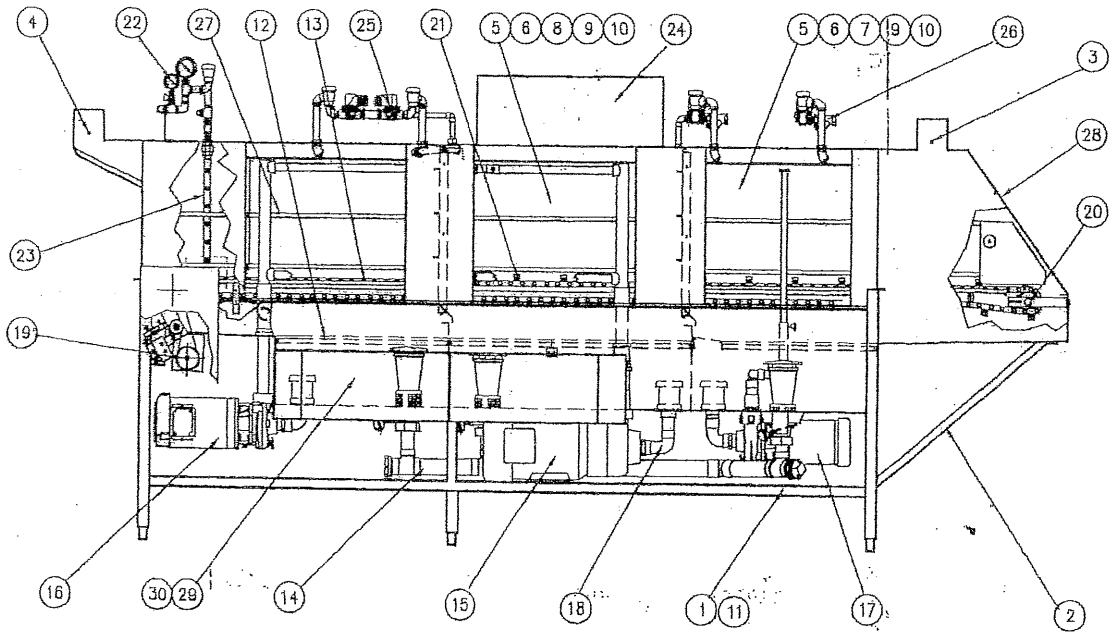

ITEM	PART NO.	SIZE	DESCRIPTION	QTY.
1	1512-5*	B	WELDMENT, SHELL, LEG & FRAME -1 PC	1
2	1448-4	B	STRUT - LOAD SECTION	2
3	1512-37	B	VENT DAMPER - LOAD	1
4	1512-38	B	VENT DAMPER - UNLOAD	1
5	1512-39*	B	DOOR CHANNELS	6
6	1472-25*	A	GASKET - DOOR CHANNELS	6
7	1512-40*	B	DOOR - PREWASH	1
8	1512-41*	B	DOOR - WASH/RINSE	2
9	D2715A	A	DOOR LATCH	6
10	977-47	A	ACTUATOR - DOOR INTERLOCK	3
11	1512-79	B	WEIR PLATE PLACEMENT	1
12	1512-44	B	SCRAP SCREEN LOCATIONS	1
13	1512-53*	B	TRACK LOCATION	1
14	1512-53	B	DRAIN ASS'Y - R.H. SINGLE POINT	1
15	1512-55*	B	DISCHARGE LINE ASSEMBLY, WASH	1
16	1512-60*	B	DISCHARGE LINE ASSEMBLY, RINSE	1
17	1512-63*	B	DISCHARGE LINE ASS'Y, R.H. PREWASH	1
18	1512-43	A	SUCTION LINE ASSEMBLY	1
19	1512-90	B	DRIVE MECHANISM (WITHOUT DRYER)	1
20	1512-68	B	FOLLOWER SHAFT ASSEMBLY	1
21	1512-71	B	CHAIN ASSEMBLY (TRAY WASHER ONLY)	1
22	1512-74	B	PIPING ASS'Y - FINAL RINSE (EXT.)	1
23	1512-104*	B	SINGLE PIPE FINAL RINSE ASSEMBLY	1
24	SK-4471	B	CONTROL PANEL LAYOUT	1
25	1512-81	B	TANK FILL ASSEMBLY - AUTOMATIC	1
26	1512-107	B	TEMPERING FILL ASSEMBLY - PREWASH	1
27	1512-82	B	GUIDE RAIL & BAFFLE INSTALLATION	1
28	1512-91*	B	FRAME - ENTRANCE	1
29	1512-93	B	BACK PLATE - HEATER COVERS	1
30	1512-94	B	COVER - HEATERS	1

*DRAWINGS TABULATED FOR HEIGHT OPTION

REV	ECN NO	DATE
A	5"X-HI	9.28.01

FILE: PARTS\1512-1

TOLERANCES
FRACTIONS ±1/64
DECIMALS
.XXX ± .005
.XX ± .01
ANGLES ±1/2°
UNLESS OTHERWISE SPECIFIED

TITLE: GENERAL ASSEMBLY TRAC 878 RH (WASHER ONLY)

NEXT ASSY: —
REQ'D: 1

DWG. NO.: 1512-1

MATL: NOTED

SCALE: 1:16

USED ON: TRAC 878

Insinger
Philadelphia, PA 19135
(215) 624-4800
FAX (215) 624-

DRWN/DATE: GP 8.30.01

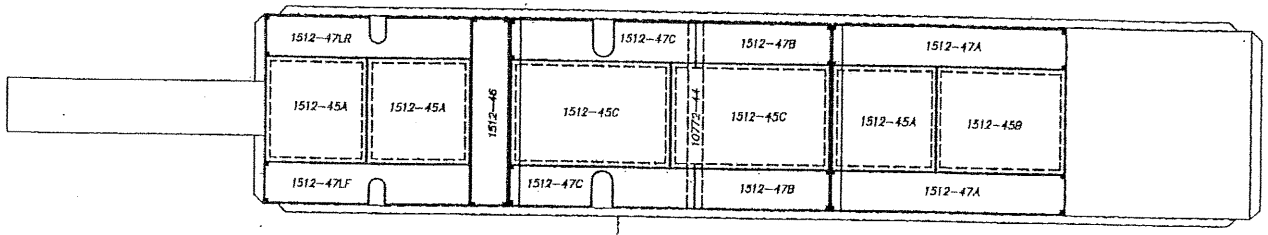

LH PLAN

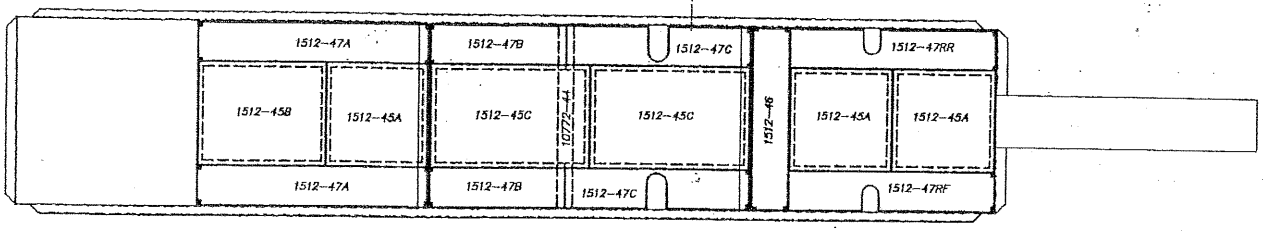

RH PLAN

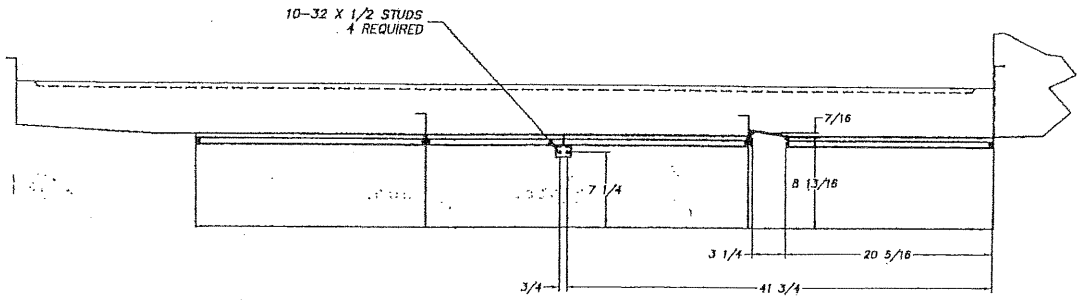

RH ELEVATION, LH OPPOSITE

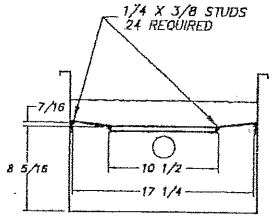

AT BOTH ENDS
AND @ DIVIDERS

			TOLERANCES	TITLE SCRAP SCREEN LOCATIONS	NEXT ASSY 1512-1	DWG. NO.
			FRACTIONS ±1/64	--	REQ'D 1	1512-44
			DECIMALS .XXX ± .005 .XX ± .01	MAT'L NOTED	SCALE 1:12	USED ON 321-3 RPW
A	--	6.28.01	ANGLES ±1/2° UNLESS OTHERWISE SPECIFIED	Insinger Philadelphia, PA 19135 (215) 624-4800 FAX (215) 624-6966	DRWN/DATE GP 4.24.01	
REV	ECN NO	DATE				
FILE: PARTS\1512-44						

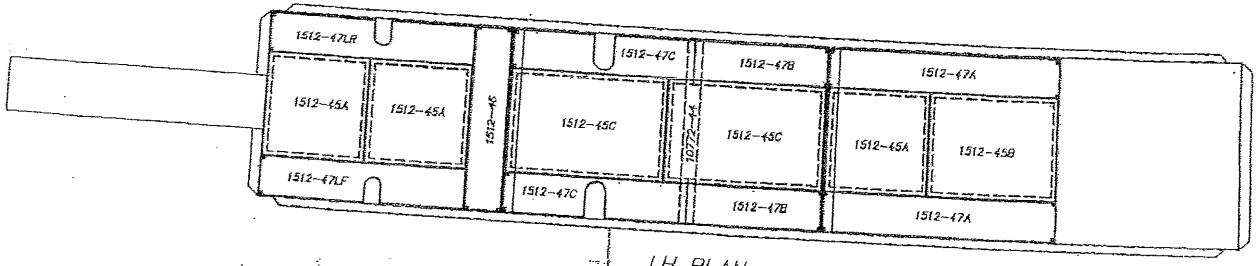

LH PLAN

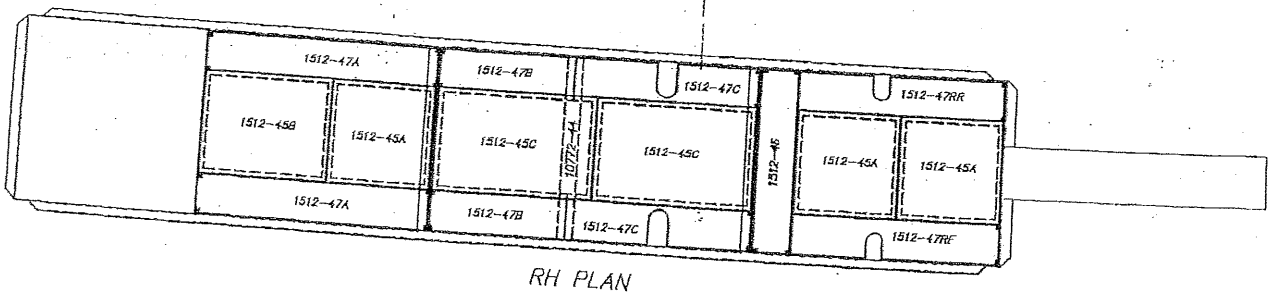

RH PLAN

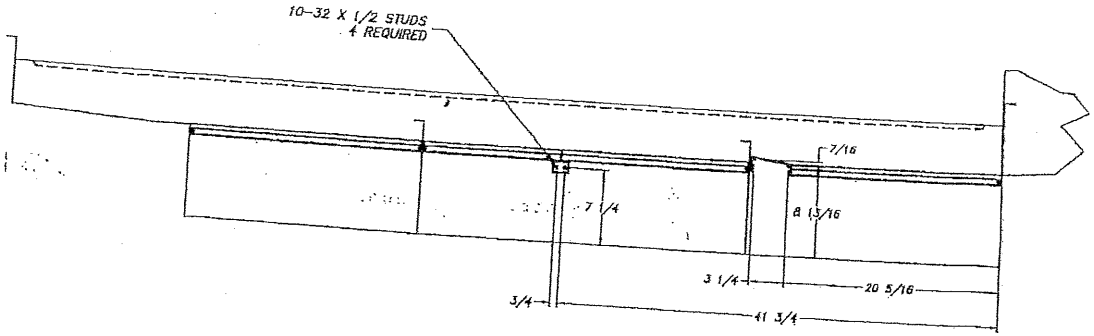

RH ELEVATION, LH OPPOSITE

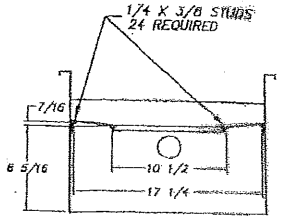

AT BOTH ENDS
AND @ DIVIDERS

REV	ECN NO	DATE
A	–	6.28.01

FILE: PARTS\1512-44

TOLERANCES
FRACTIONS ±1/64
DECIMALS
.XXX ± .005
.XX ± .01
ANGLES ±1/2°
UNLESS
OTHERWISE
SPECIFIED

TITLE	SCRAP SCREEN LOCATIONS	NEXT ASSY 1512-1	DWG. NO. 1512-44
	–	REQ'D 1	
MAT'L	NOTED	SCALE	USED ON 321-3 RPW
Insinger	Philadelphia, PA 19 (215) 624-4800		DRWN/DATE GP