SPARE PART LIST CATALOGUE
CATALOGO PARTI DI RICAMBIO

MILK CRATE COOLER

PNC	MODEL
738276	KCHMC49

Pag.	Indice	Index
2	Disegni	Drawings
3	Lista ricambi	Spare parts list

Brand / Marchio: KELVINATOR

Doc. Nr.: _____

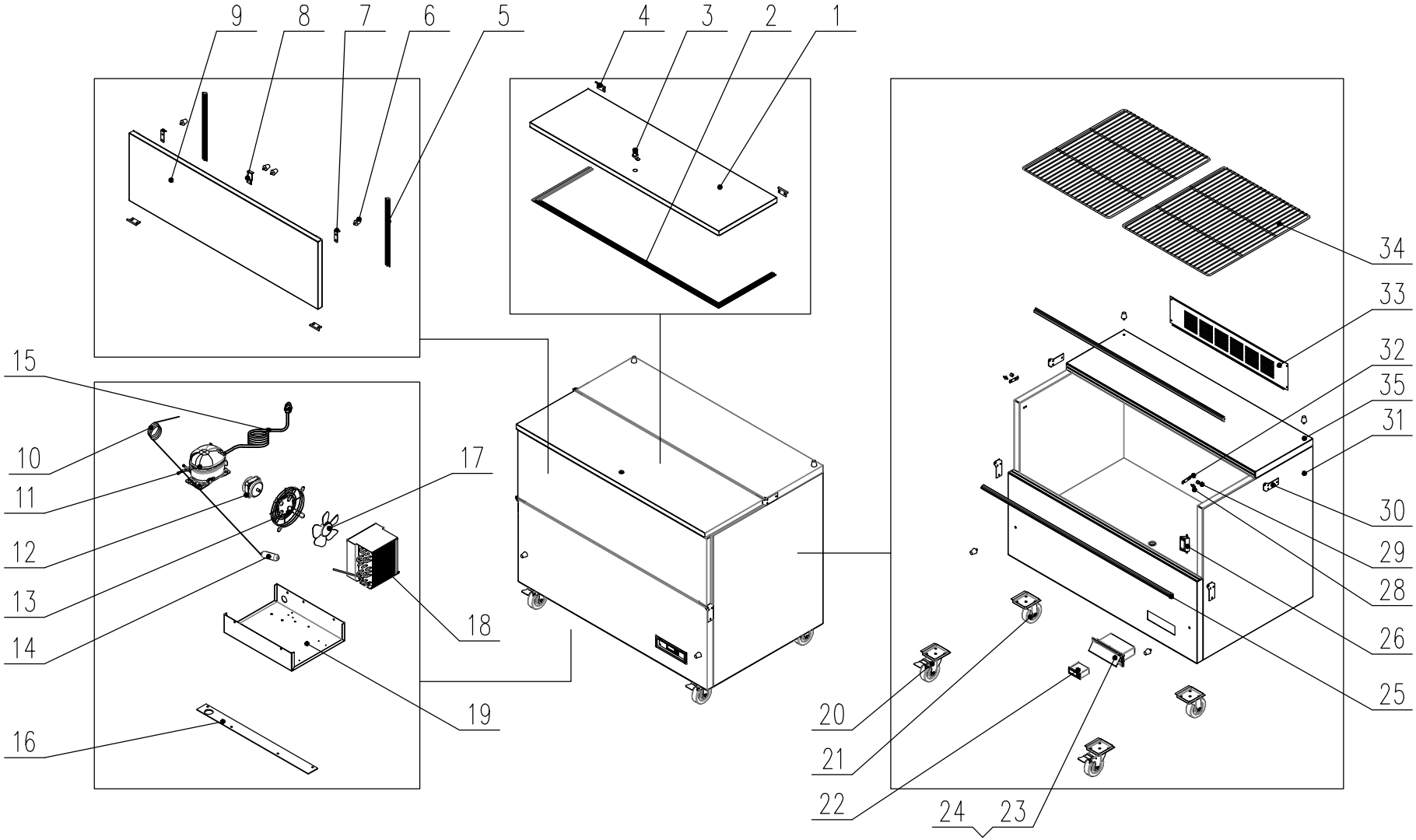

EXPLODE OF **KCHMC34/49/58**

SPARE PARTS LIST OF KCHMC49

NO.	ELECTROLUX PNC	NAME	ERP	QUY.	MATERIAL	REMARK
1	0USM56	TOP LID	5108000389	1PC		
2	0USM59	TOP SEAL	108040196	1PC	软PVC 灰色	
3	0USM61	LOCK (with Key)	107130020	1PC		
4	0USM62	DOOR HINGE	5201001023	4PCS	304#	
5	0USM63	DOOR SEAL	108270360	2PCS	软PVC 灰色	
6	0USH46	LOCATION KNOB	114010039	4PCS	RUBBER	
7	0USM64	HOOK PLATE	5202002548	2PCS	δ2.0 304#	
8	0USM65	LOCK HOOK	5202002549	1PC	δ2.0 304#	
9	0USM67	FRONT DOOR	5107000082	1PC		
10	0USM53	CAPILLARY	102050011	1PC		
11	0USF28	COMPRESSOR	104010249	1PC		
12	0USF40	CONDENSER FAN	104030019	1PC		
13	0USI46	BASKET GUARD GRILLS	109030031	1PC	COATED STEEL	
14	0USG65	FILTER DRIER	107180001	1PC	XH-9	
	0USI78	DRIER SUPPORT	108300116	1PC		
15	0USH67	PLUG	104050013	1PC		
16	0USM70	CONNECTION PLATE	5202000812	2PCS	δ1.0 镀锌板	
17	0USC4J	CONDENSER FAN BLADE	10404000 1	1PC		
18	0USF34	CONDENSER	113010368	1PC		
19	0USM71	UNIT BOARD	5202002552	1PC	δ2.0 镀锌板	
20	0USF04	BRAKE WHEEL	10705000 2	2PCS		
21	0USH64	NORMAL WHEEL	10705000 1	2PCS		
	0USK96	Castor Mounting Bolt	107210128	16PCS		
	0USK97	Castor Mounting Locking Washer	107210245	16PCS		
	0USK98	Castor Mounting Flat Washer	107210235	16PCS		
22	0USDAE	Thermostat - Full Set	104020172P-002M-F	1PC		
	0USC6J	THERMOSTAT CONTACTOR	104020172-2	1PC		XW03K-002M-F
	0USN67	THERMOSTAT DISPLAY	104020174	1PC		
	0USDAA	Thermostat Components	104020233	1PC		
	0USC4D	Inner Chest Temperature Sensor Probe	XW03K/40A -TempSensorProbe-738247	1PC		Black
	0USC6S	Evaporator Temperature Sensor Probe	XW03K/40A -TempSensorProbe-738248	1PC		WHITE
23	0USJ38	THERMOSTAT BOX ; black	108110021	1PC		
24	0USJ39	THERMOSTAT COVER	108110022	1PC		
25	0USM73	FRONT SEAL	108040193	2PCS	软PVC 灰色	
26	0USM10	Sensor Fixed Clip	108110315	1PC	PLASTIC	GRAY
28	0USM75	LOCATION AXIS	107110045	2PCS	304#	
29	0USM76	ROTATING AIXS	107110046	2PCS	304#	
30	0USM77	HINGE PLATE	5202002550	4PCS	δ2.0 304#	
31		BODY	5102003102	1PC		
	0USC4X	LOCATION KNOB (TALL)	114010092	4PCS		
32	0USM78	HOOK	5202002551	2PCS	δ2.0 304#	
33	0USM79	UNIT ROOM COVER	5202002621	1PC	δ0.5 冷板喷涂	
34	0USN15	FLOOR PROTECTER SHELF	10902029 1	2PCS	Φ3Φ7冷轧圆钢	
35	0USC4Z	FIXED TOP	5106000501	1PC		
	0USM54	DRAIN PIPE	114040017	1PC		φ12 * 650

REV
10.12.2020