ikon series

by KOOL-IT

# Beer Dispensers

## Service, Installation and Care Manual

**Please read this manual completely before attempting to install or operate this equipment.**

**Notify carrier of damage!  Inspect all components immediately.**

**IMPORTANT INFORMATION**

**READ BEFORE USE**

**PLEASE SAVE THESE INSTRUCTIONS!**

# COMMECIAL REFRIGERATOR SAFETY

**Your safety and the safety of others are very important.**

We have provided many important safety messages in this manual and on your appliance. Always read and obey all safety messages.

**Our product instructions will be uploaded on our company official website.**

This is the Safety Alert Symbol. This symbol alerts you to potential hazards that can kill or injure you and others. All safety messages will follow the Safety Alert Symbol and either the words" DANGER", "WARNING" or "CAUTION".

**⚠ DANGER ⚠**

Danger means that failure to heed this safety statement may result in severe personal injury or death.

**⚠ WARNING ⚠**

Warning means that failure to heed this safety statement may result in extensive product damage, serious personal injury, or death.

**CAUTION**

Caution means that failure to heed this safety statement may result in minor or moderate personal injury, or property or equipment damage.

All safety messages will alert you to what the potential hazard is, tell you how to reduce the chance of injury, and let you know what can happen if the instructions are not followed.

**I**f the supply cord is damaged, it must be replaced by the manufacturer, its service agent or similarly qualified persons in order to avoid a hazard.

**T**his appliance is not intended for use by persons (including children) with reduced physical, sensory or mental capabilities, or lack of experience and knowledge, unless they have been given supervision or instruction concerning use of the appliance by a person responsible for their safety.

**C**hildren should be supervised to ensure that they do not play with the appliance.

**T**his appliance can be used by children aged from 8 years and above and persons with reduced physical sensory or mental capabilities or lack of experience and knowledge if they have been given supervision or instruction concerning use of the appliance in a safe way and understand the hazards involved. Children shall not play with the appliance. Cleaning and user maintenance shall not be made by children without supervision.

**K**eep the appliance and its cord out of reach of children less than 8 years.

**D**o not store explosive substances such as aerosol cans with a flammable propellant in this appliance.

**T**he appliance use flammable insulation blowing gas C5H10, disposal of the appliance shall in accordance with the regulations of local authorities.

The key for appliance electric box should be safe kept by qualified persons in order to avoid a hazard

Warning; Risk of fire / flammable materials

**WARNING**: Keep ventilation openings, in the appliance enclosure or in the built-in structure, clear of obstruction.

**WARNING**: Do not use mechanical devices or other means to accelerate the defrosting process, other than those recommended by the manufacturer.

**WARNING**: Do not damage the refrigerant circuit.

**WARNING**: Do not use electrical appliances inside the food storage compartments of the appliance, unless they are of the type recommended by the manufacturer.

Handling, moving, and use of the refrigerator or freezer to avoid either damaging the refrigerant tubing, or increasing the risk of a leak

L'opération, le mouvement et l'utilisation du réfrigérant ou le congélateur doivent éviter les dommages du tuyau réfrigérant ou le rique de la fuite.

Caution – Risk of Fire or Explosion due to Flammable Refrigerant Used. Follow Handling Instructions Carefully in Compliance with U.S. Government Regulations.

Component parts shall be replaced with like components and that servicing shall be done by factory authorized service personnel, so as to minimize the risk of possible ignition due to incorrect parts or improper service.

Les pièces de rechange doivent être remplacées par les components relatifs et les opérations doivent être faites par les professionnels afin de minimaliser le risque d'allumage à cause des parts incorrects ou des opérations impropres.

CAUTION – Risk Of Fire Or Explosion Due To Puncture Of Refrigerant Tubing; Follow Handling Instructions Carefully. Flammable Refrigerant Used

DANGER: Risk of child entrapment. Before you throw away your old refrigerator or freezer:

Take off the doors
Leave the shelves in place so that children may not easily climb inside

# CONTENTS

RECEIVING & INSPECTING EQUIPMENT……4
SPECIFICATIONS……5
INSTALLATION……6
OPERATION……7
MAINTENANCE……9
WIRING DIAGRAM……12

**All rights reserved. Reproduction without written permission is prohibited.**

# SERIAL NUMBER INFORMATION

The serial number of all self-contained refrigerators and freezers is located inside the unit on the left hand side near the top on the wall. Always have the serial number of your unit available when calling for parts or service.

This manual covers standard units only. If you have a custom unit, consult the customer service department at the number listed in the back cover.

# RECEIVING AND INSPECTING THE EQUIPMENT

Even though most equipment is shipped crated, care should be taken during unloading so the equipment is not damaged while being moved into the building.

1. Visually inspect the exterior of the package and skid or container. Any damage should be noted and reported to the delivering carrier immediately.
2. If damaged, open and inspect the contents with the carrier.
3. In the event that the exterior is not damaged, yet upon opening, there is concealed damage to the equipment notify the carrier. Notification should be made verbally as well as in written form.
4. Request an inspection by the shipping company of the damaged equipment. This should be done within 10 days from receipt of the equipment.
5. Be certain to check the compressor compartment housing and visually inspect the refrigeration package. Be sure lines are secure and base is still intact.
6. Freight carriers can supply the necessary damage forms upon request.
7. Retain all crating material until an inspection has been made or waived.

# SPECIFICATION

| BEER DISPENSERS | | | | | | | | |
|---|---|---|---|---|---|---|---|---|
| MODEL# | V/Hz/Ph | AMPS | STORAGE CAPACIT | HP | BTU | CHARGE OZ | SHIP WEIGHT | NEMA PLUG |
| KDD1 | 115/60/1 | 2.2 | 7.2 | 1/8 | 740 | 2.82 | 161 | 5-15P |
| KDD50-2-1 | 115/60/1 | 3 | 10.45 | 2/5 | 1155 | 3.88 | 269 | 5-15P |
| KDD50-2-2 | 115/60/1 | 3 | 10.45 | 2/5 | 1155 | 3.88 | 275 | 5-15P |
| KDD62-3-1 | 115/60/1 | 3 | 14.16 | 2/5 | 1155 | 3.88 | 307 | 5-15P |
| KDD62-3-2 | 115/60/1 | 3 | 14.16 | 2/5 | 1155 | 3.88 | 313 | 5-15P |
| KDD74-4-2 | 115/60/1 | 3 | 17.26 | 1/2 | 1771 | 4.59 | 351 | 5-15P |

# INSTALLATION

### Location

Units represented in this manual are intended for indoor use only. Be sure the location chosen has a floor strong enough to support the total weight of the cabinet and contents. A fully loaded unit can weigh as much as 1500 pounds. Reinforce the floor as necessary to provide for maximum loading. For the most efficient refrigeration, be sure to provide good air circulation inside and out.

### Outside cabinet:

Be sure that the unit has access to ample air. Avoid hot corners and locations near stoves and ovens.
It is recommended that the unit be installed no closer than 2" from any wall with at least 12" of clear space above the unit. Should it become necessary to lay the unit on its side or back for any reason, allow at least 24 hours before start-up so as to allow compressor oil to flow back to the sump. Failure to meet this requirement can cause compressor failure and unit damage.

### Leveling

A level cabinet looks better and will perform better because the doors will line up with the frames properly, the cabinet will not be subject to undue strain and the contents of the cabinet will not move around on the shelves. Use a level to make sure the unit is level from front to back and side to side. Units supplied with legs will have adjustable bullet feet to make the necessary adjustments. If the unit is supplied with casters, no adjustments are available. Ensure the floor where the unit is to be located is level.

### Stabilizing

Models are supplied on casters for your convenience, ease of cleaning underneath and for mobility. It is very important, however, that the cabinet be installed in a stable condition with the front wheels locked while in use.

**Standard warranties will be voided due to improper installation procedures.**

### Electrical connection

Refer to the amperage data on page 5, the serial tag, your local code or the National Electrical Code to be sure the unit is connected to the proper power source. A protected circuit of the correct voltage and amperage must be run for connection of the line cord, or permanent connection to the unit.

**The ON/OFF switch must be turned to OFF and the unit disconnected from the power source whenever performing service, maintenance functions or cleaning the refrigerated area.**

# OPERATION

**CAUTION**

**Do not throw items into the storage area. Failure to heed these recommendations could result in damage to the interior of the cabinet.**

**Refrigerators:** The factory setting for temperature range is 34°F - 38°F

**Light Switch:**
An light switch is located next to on/off switch on the front of the bottom shroud.

# SOLID-STATE THERMOSTAT DESCRIPTIONS

## 1. FRONT PANEL COMMANDS

### 1.1 KEY FUNCTION

**SET**: To display target set point; in programming mode it selects a parameter or confirm an operation.

**(DEF)** To start a manual defrost

**(UP)** To see the last temperature alarm happened; in programming mode it browses the parameter codes or increases the display value

**(DOWN)** To see the last temperature alarm happened; in programming mode it browses the parameter codes or decreases the display value

**KEY COMBINATION**

**+** To lock & unlock the keyboard

**SET +** To enter in programming mode

**SET +** To return to the room temperature display

KDD1

KDD21/KDD31/KDD32/KDD42

### 1.2 Function of LEDS

| LED | MODE | FUNCTION |
|---|---|---|
| ❄ | ON | Compressor enabled |
| ❄ | Flashing | -Programming Phase (flashing with ❄)<br>- Anti-short cycle delay enabled |
| ❄ | ON | Defrost enabled |
| ❄ | Flashing | - Programming Phase (flashing with ❄)<br>- Drip time in progress |
| (( )) | ON | An temperature alarm happened |

## 2. MAIN FUNCTIONS

### 2.1 HOW TO SEE THE SETPOINT

1. Push and immediately release the **SET** key: the display will show the set point value;
2. Push and immediately release the **SET** key or wait for 5 seconds to display the sensor value again.

### 2.2 HOW TO CHANGE THE SETPOINT

1. Push the **SET** key for more than 2 seconds to change the set point value;
2. The value of the set point will be displayed and the ❄ LED starts blinking;
3. To change the set value push the ▲ or ▼ key within 10s;
4. To memory the new set point value and push the SET key again or wait 10s.

### 2.3 HOW TO START A MANUAL DEFFROST

Push the ❄ key for more than 2 seconds and a manual defrost will start

### 2.4 HOW TO LOCK THE KEYBOARD

1. Keep pressed the ▲ and ▼ keys for more than 3s;
2. The “POF” message will be displayed and the keyboard will be locked. At this point, it will be possible only to see the set point or the MAX or Min temperature stored;
3. If a key is pressed more than 3s the ”POF” message will be displayed.

### 2.5 HOW TO UNLOCK THE KEYBOARD

Keep pressed the ▲ and ▼ keys together for more than 3s, till the “Pon” message display, then press ▲ or ▼ key to select the item to check or program.

## 3. ALARM SIGNALS

### HOW TO SEE THE ALARM AND RESET THE RECORDED ALARM

1. Push the ▲ or ▼ key, the alarm signals are displayed;
2. When the signal is displayed, hold the **SET** key until the “rst” message is displayed, and push the **SET** key again, the “rst” message start blinking and the normal temperature will be displayed again.

| Message | Cause | Outputs |
|---|---|---|
| “P1” | Room probe failure | Compressor output according to par. “Con” and “COF” |
| “P2” | Evaporator probe failure | Defrost end is timed |
| “HA” | Maximum temperature alarm | Outputs unchanged. |
| “LA” | Minimum temperature alarm | Outputs unchanged. |
| “dA” | Door open | Regulation restarts |
| “EA” | External alarm | Output unchanged. |
| “CA” | Serious external alarm (i1F=bAL) | All outputs OFF. |
| “CA” | Pressure switch alarm (i1F=PAL) | All outputs OFF |

# MAINTENANCE

**The power switch must be turned to OFF and the unit disconnected from the power source whenever performing service, maintenance functions or cleaning the refrigerated area.**

### Refrigerators

The interior and exterior can be cleaned using soap and warm water. If this isn't sufficient, try ammonia and water or a nonabrasive liquid cleaner. When cleaning the exterior, always rub with the "grain" of the stainless steel to avoid marring the finish.

Do not use an abrasive cleaner because it will scratch the stainless steel and plastic and can damage the breaker strips and gaskets.

### Cleaning the Condenser Coil

The condenser coil requires regular cleaning, recommended is every 90 days. In some instances, you may find that there is a large amount of debris and dust or grease accumulated prior to the 90 day time frame. In these cases the condenser coil should be cleaned every 30 days.

If the build up on the coil consists of only light dust and debris the condenser coil can be cleaned with a simple brush, heavier dust build up may require a vacuum or even compressed air to blow through the condenser coil.

If heavy grease is present, there are de-greasing agents available for refrigeration use and specifically for the condenser coils. The condenser coil may require a spray with the de-greasing agent and then blown through with compressed air.

Failure to maintain a clean condenser coil can initially cause high temperatures and excessive run times, continuous operation with dirty or clogged condenser coils can result in compressor failures. Neglecting the condenser coil cleaning procedures will void any warranties associated with the compressor or cost to replace the compressor.

**Never use a high pressure water wash for this cleaning procedure as water can damage the electrical components located near or at the condenser coil.**

In order to maintain proper refrigeration performance, the condenser fins must be cleaned of dust, dirt and grease regularly. It is recommended that this be done at least every three months. If conditions are such that the condenser is totally blocked in three months, the frequency of cleaning should be increased. Clean the condenser with a vacuum cleaner or stiff brush. If extremely dirty, a commercially available condenser cleaner may be required.

### Stainless Steel Care and Cleaning

To prevent discoloration of rust on stainless steel several important steps need to be taken. First, we need to understand the properties of stainless steel. Stainless steel contains 70-80% iron which will rust. It also contains 12-30% chromium which forms an invisible passive film over the steels surface which acts as a shield against corrosion. As long as the protective layer is intact, the metal is still stainless. If the film is broken or contaminated, outside elements can begin to breakdown the steel and begin to form rust of discoloration. Proper cleaning of stainless steel requires soft cloths or plastic scouring pads,

**NEVER USE STEEL PADS, WIRE BRUSHES OR SCRAPERS!**

# MAINTENANCE

Cleaning solutions need to be alkaline based or non-chloride cleaners. Any cleaner containing chlorides will damage the protective film of the stainless steel. Chlorides are also commonly found in hard water, salts, and household and industrial cleaners. If cleaners containing chlorides are used be sure to rinse repeatedly and dry thoroughly upon completion.

Routine cleaning of stainless steel can be done with soap and water. Extreme stains or grease should be cleaned with a non-abrasive cleaner and plastic scrub pad. It is always good to rub with the grain of the steel. There are also stainless steel cleaners available which can restore and preserve the finish of the steels protective layer.

Early signs of stainless steel breakdown can consist of small pits and cracks. If this has begun, clean thoroughly and start to apply stainless steel cleaners in attempt to restore the passivity of the steel.

**Never use an acid based cleaning solution! Many food products have an acidic content which can deteriorate the finish. Be sure to clean the stainless steel surfaces of ALL food products. Common items include, tomatoes, peppers and other vegetables.**

### Gasket Maintenance

Gaskets require regular cleaning to prevent mold and mildew build up and also to keep the elasticity of the gasket. Gasket cleaning can be done with the use of warm soapy water. Avoid full strength cleaning products on gaskets as this can cause them to become brittle and prevent proper seals. Also, never use sharp tools or knives to scrape or clean the gasket which could possibly tear the gasket and rip the bellows.

Gaskets can easily be replaced and don't require the use of tools or authorized service persons. The gaskets are "Dart" style and can be pulled out of the grove in the door and new gaskets can be "pressed" back into place.

### Doors/Hinges

Over time and with heavy use doors the hinges may become loose. If it is noticed that the door is beginning to sag, it may become necessary to tighten the screws that mount the hinge brackets to the frame of the unit. If the doors are loose or sagging this can cause the hinge to pull out of the frame which may damage both the doors and the door hinges. In some cases this can require qualified service agents or maintenance personnel.

### Drain Maintenance

Each unit has a drain located inside the unit which removes the condensation from the evaporator coil and evaporates it at an external condensate evaporator pan. Each drain can become loose or disconnected from moving or bumping the drain. If you notice excessive water accumulation on the inside of the unit, be sure the drain tube is connected from the evaporator housing to the condensate evaporator drain pan. If water is collected underneath the unit you may want to check the condensate evaporator drain tube to be sure it is still located inside the drain pan. The leveling of the unit is important as the units are designed to drain properly when on a level surface, if your floor is not level this can also cause drain problems. Be sure all drain lines are free of obstructions typically food product is found blocking drain lines causing water to back up and overflow the drain pans.

# MAINTENANCE

### Swing Door Replacement and Adjustment

1. Open the bottom shroud and hold the door, then loose bottom hinge's screws and take off the old door;
2. Prepare new door, insert top pin into top hinge, get one bottom hinge to hold the door by the bottom pin , then fasten bottom hinge securely to the door frame with three screws;
3. Allow the door to freely swing, make sure it swing close by itself with no restriction;
4. Plug the unit in and make sure the lock work well;
5. If not, adjust the door height by adding the plastic spacer/washer provided to the bottom hinge pin.

### DIRECT DRAW DRAFT ARM INSTALLATION

On direct draws, the drain is located at the front of the cabinet. To plumb in the drain, connect P.V.C. pipe to the barbed fitting supplies with the unit.

### INSTALLING C02 CYLINDER AND REGULATOR

Make certain that all fittings in system are tight. Always keep the $CO_2$ cylinder in vertical position.
The recommended pressure for the $CO_2$ system is 8-10 psi.

**Handle all pressure system components with care. Do not use excessive pressures. Be sure instructions are understood thoroughly. If in doubt, contact your dealer/distributor for explanation**.

**Filled $CO_2$ tanks are potentially dangerous because of the pressure they contain. If you are unfamiliar with their use or the use of the $CO_2$ regulator, seek information from your local distributor, or your local beverage man before proceeding.**

# MAINTENANCE

## INSTALL DRAFT ARM AND PARTS LIST

Place rubber washer over draft arm mounting holes in cabinet, put beer line connector down through hole. Next, secure draft arm with four screws.
Insert air hose (one inch plastic tube) in draft arm, being careful not to disturb insulation. Remove top cover of draft arm and attach air hose clip to the insulating sleeve at the top of the draft arm. Replace top cover. The air hose clip will assure that the hose remains in proper place at all times, keeping the beer faucet cold.

1. Beer Keg
2. “D” Sharp Keg Tap
3. Beer Line
4. Beer Dispenser
5. $CO_2$ Line
6. $CO_2$ Tee Joint
7. $CO_2$ Regulator
8. $CO_2$ Cylinder
9. $CO_2$ Line#1
10. $CO_2$ Line#2

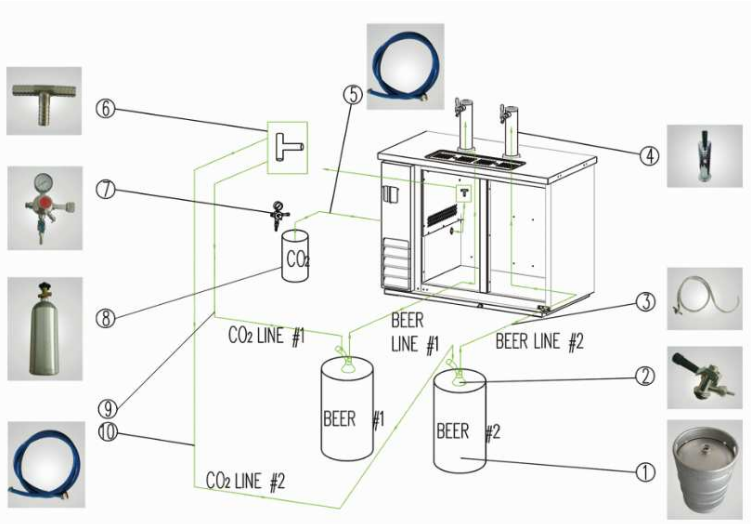


## ONE DOOR $CO_2$ KNOCK-OUT

This instruction is the procedure for installing a remote $CO_2$ container for one door unit.

REQUIRED TOOLS

- Pliers
- Power Drill
- Silicone Sealer
- Drill bit, 1/2”

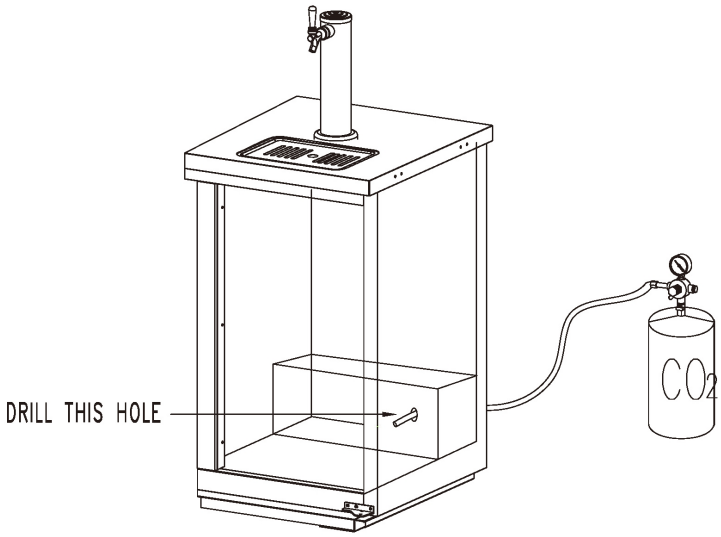

STEP 1 - Remove black knockout plug with a pair of pliers.

NOTE: Knockout plug for $CO_2$ line can be locate in two different areas.

View diagram to locate these two areas.

STEP 2 - Use drill and bit to bore hole straight back through wall into compressor compartment.

STEP 3 - Snake $CO_2$ line through hole down and around exiting behind rear castor underneath rear grill.

STEP 4 - Seal hole around $CO_2$ line with silicone sealer to prevent cold air leakage.

**CAUTION**

**Don't lay $CO_2$ cylinders flat.**

**Don't drop $CO_2$ cylinders.**

# WIRING DIAGRAM

Model: KDD1

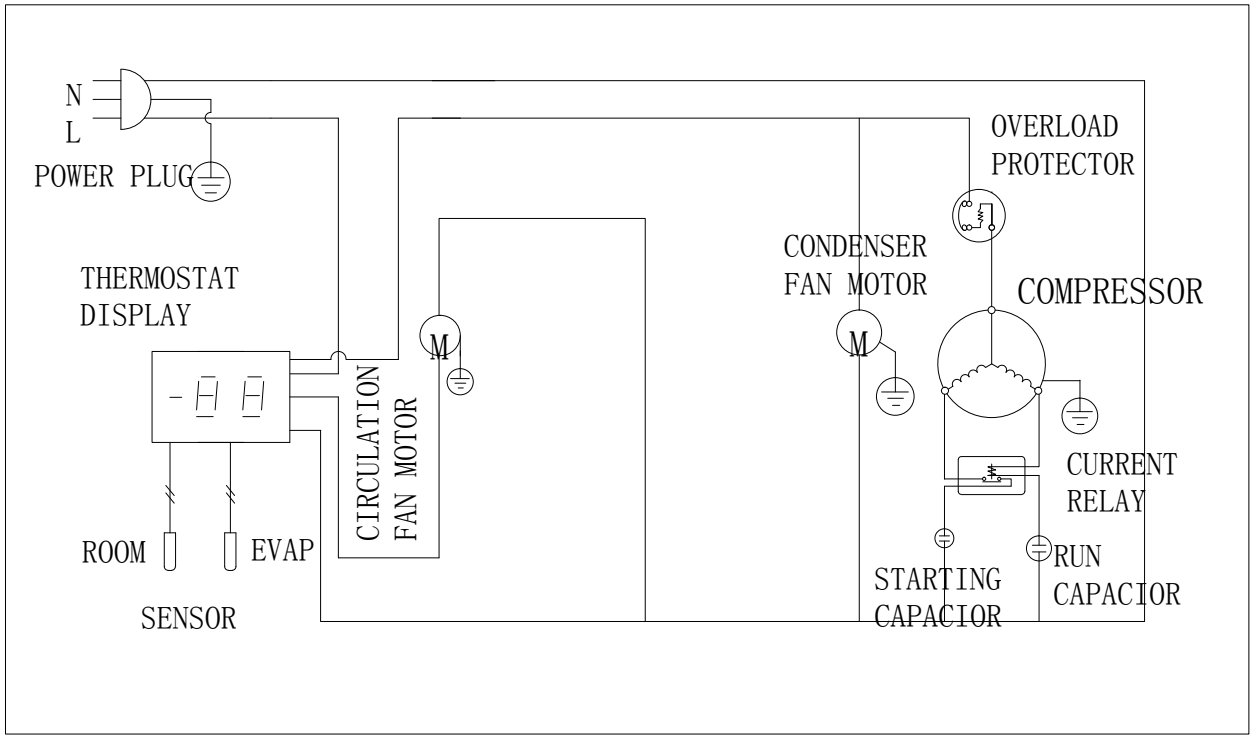


Model: KDD50-2-1/KDD50-2-2/KDD62-3-1/KDD62-3-2

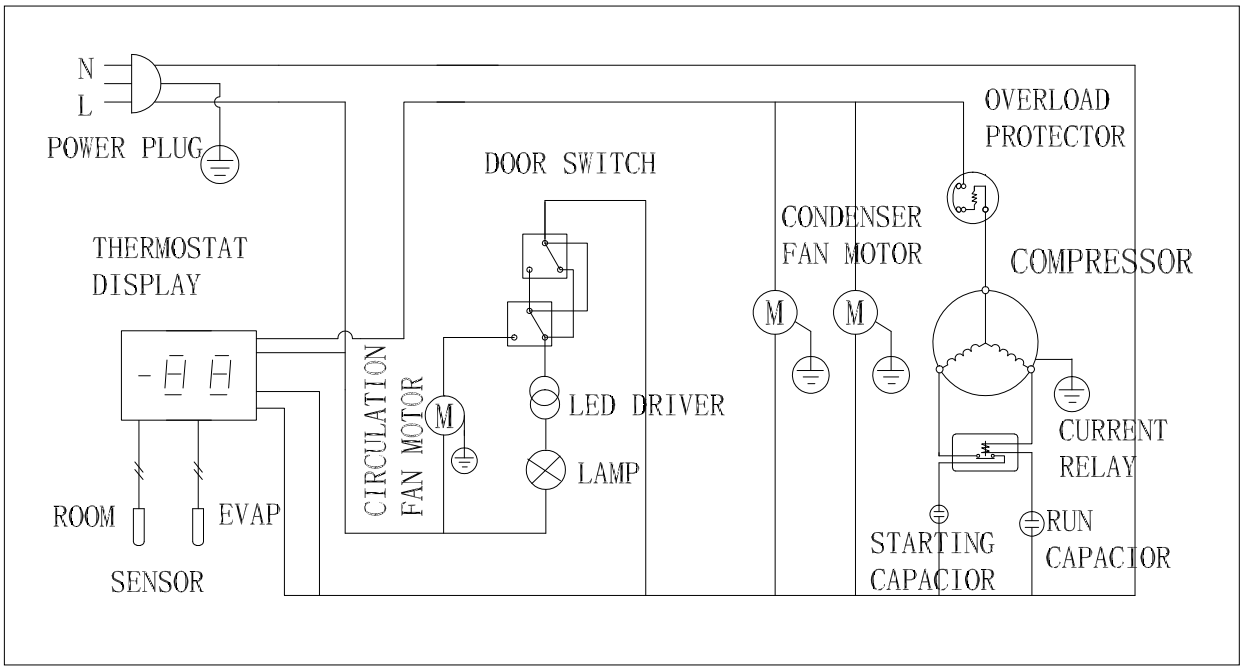

# WIRING DIAGRAM

Model: KDD74-4-2

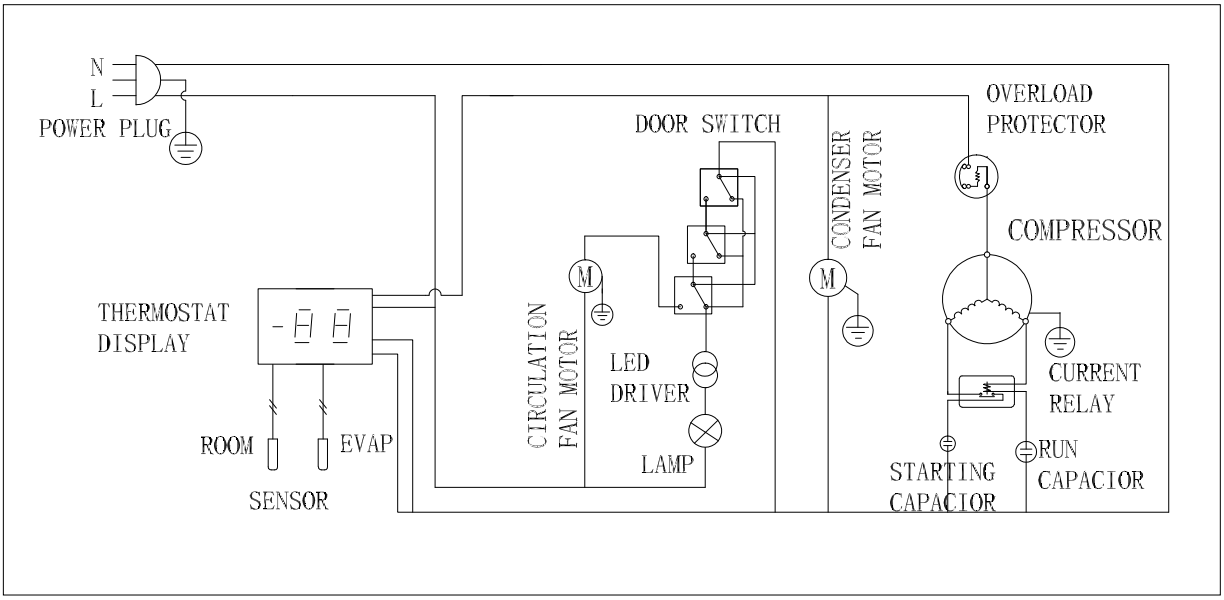

# WIRING DIAGRAM

Model: KDD1

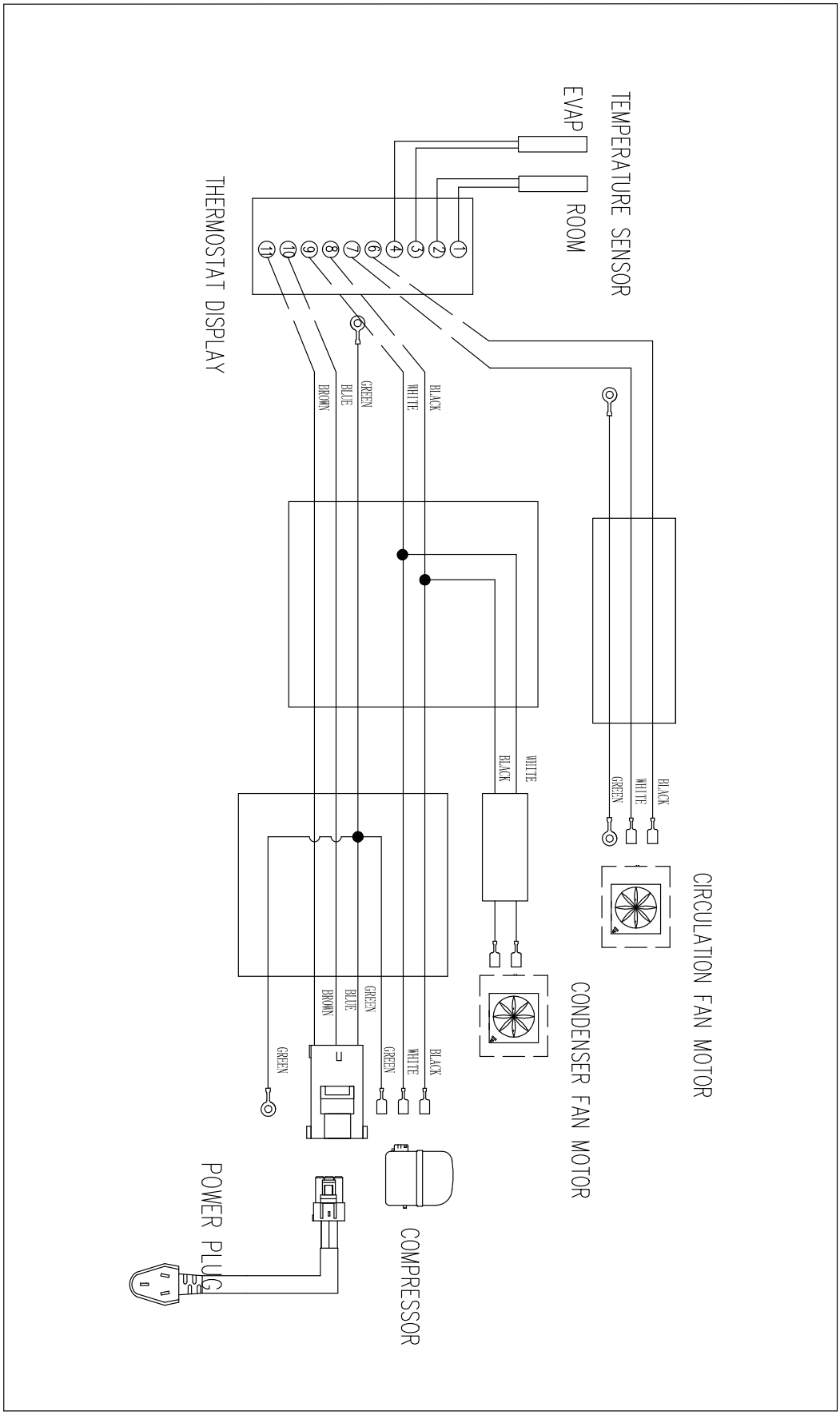

# WIRING DIAGRAM

Model: KDD50-2-1/KDD50-2-2/KDD62-3-1/KDD62-3-2

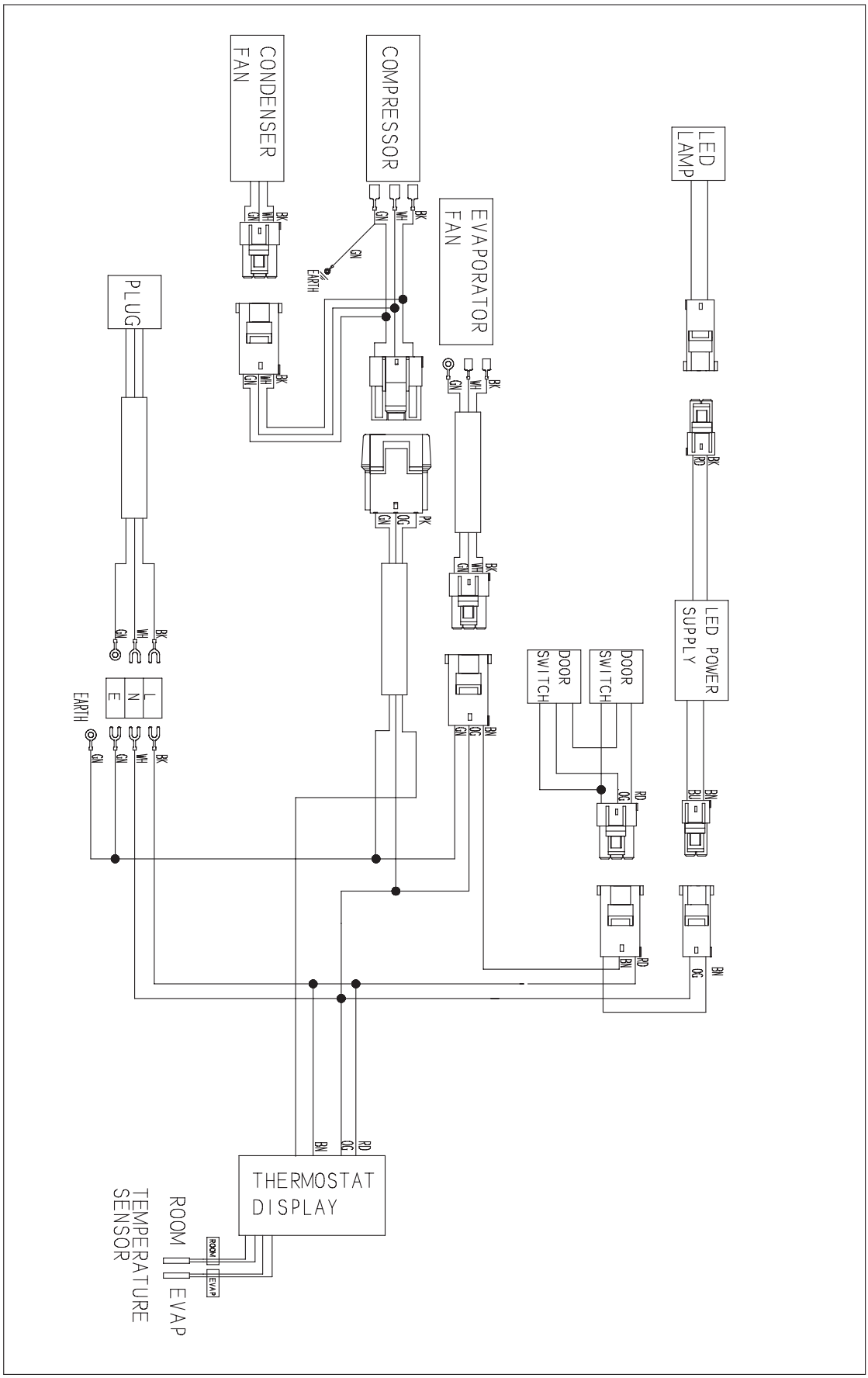

# WIRING DIAGRAM

Model: KDD74-4-2

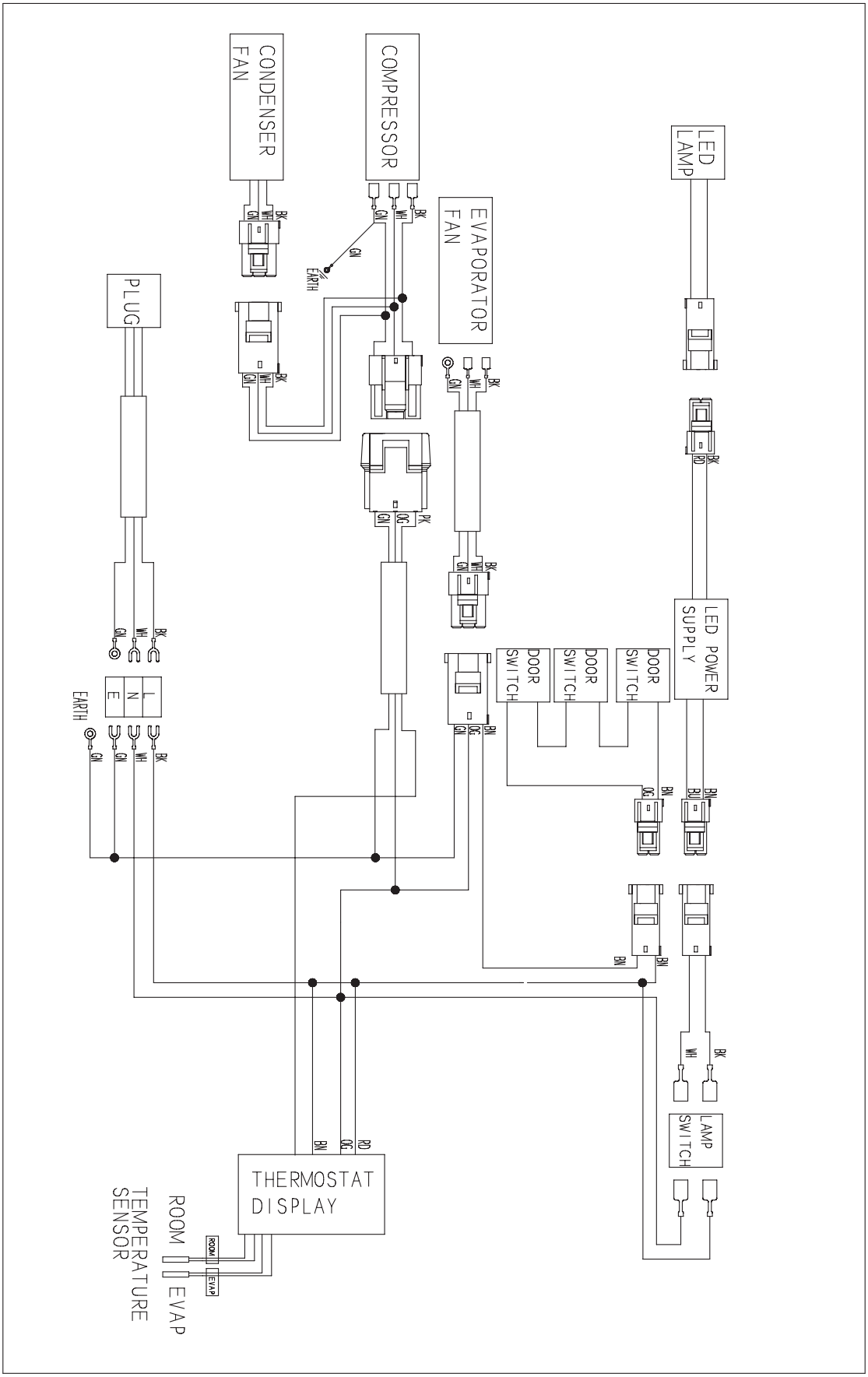

# I-KONO LINE WARRANTY

### One year parts & labor warranty

MVP Group Corp. (MVP) warrants, to the original purchaser, all of its new equipment to be free from defects in material or workmanship, under normal use and maintenance service, for a period of one (1) year from the date of original purchase or 15 months after shipment date from the manufacturer, whichever occurs first. Warranty coverage is limited to the repair and/or replacement, including labor charges, of defective parts and/or assemblies. The labor warranty shall include straight time labor charges and travel charges within 100 miles roundtrip. Warranty service must be arranged by calling **1 888 275-4538** for service in the United States and Canada. Warranty service coverage is not offered outside of the United States and Canada.

### Additional four year compressor warranty

In addition to the one (1) year warranty stated above, MVP warrants its compressor units to be free from defects in both material and workmanship under normal and proper use and maintenance service for a period of four (4) additional years from the date of original installation but not to exceed five (5) years and three (3) months after shipment from MVP. The four (4) year extended compressor warranty applies only to the compressor part itself and does not apply to any other parts, components, or labor charges involved in replacement of compressor.

### Conditions

All service under this warranty, for either labor or parts, must be performed by a preferred service provider arranged by the MVP warranty Center at **1 888 275-4538**. Warranty claims should include model number of the unit, batch & serial number of the unit, and proof of purchase. Service coverage is limited to units located in the United States and Canada only.

### Limitations & Exclusive warranty

This parts and labor warranty is the sole and exclusive warranty remedy offered by MVP. MVP's sole obligation under this warranty is limited to either repair or replacement of parts and is subject to the limitations listed below.

1. MVP will bear no responsibility or liability for any equipment which has been misapplied, mishandled, misused, subjected to harsh chemical action, or external causes such as the use of extension cords, electrical power fluctuations, lack of proper maintenance, non-factory approved revisions or modifications, or equipment damaged by fire, flood, or other acts of God.

2. MVP will bear no responsibility for consequential loss or damages such as, including but not limited to, economic loss, profit loss, personal injury, property damage, damage during transit, losses or damages arising from food or product spoilage claims.

3. MVP shall bear no responsibility for parts or labor coverage for component failure or other damages resulting from improper usage, installation, or maintenance as described in the owner's manual.

4. Exceptions to one (1) year part warranty other than additional four (4) year compressor warranty: Light bulbs and door gaskets are limited to 90 day warranty period.

5. MVP equipment is intended for commercial use only and this warranty is void if the equipment is installed in other than commercial applications.

6. All other warranties, either express or implied, arising under law or equity or custom of the trade, including but not limited to, warranties or merchantability or fitness for a particular purpose are excluded. MVP's liability on any claim, including but not limited to negligence, shall not exceed the price of the equipment that gives rise to the claim.

MVP Group Corporation

**Head Offices:** 5659 Royalmount Ave., Montreal, Qc, Canada H4P 2P9
TEL: (514) 737-9701 • TOLL FREE: (888) 275-4538
FAX: (514) 342-3854 • TOLL FREE FAX: (877) 453-8832

**US Sales Offices:** 12000 Biscayne Blvd, Suite 108, Miami, FL 33181
TEL: (786) 600-4687 • TOLL FREE: (844) 218-8477 • FAX: (786) 661-4100

mvpgroupcorp.com • sales@mvpgroupcorp.com