LBC BAKERY EQUIPMENT

SINMAG Company

Models LCR5 and LCR7

5-Spit and 7-Spit Rotisserie Ovens
Installation, Service and Parts Manual

LBC Bakery Equipment, Inc.

5901 – 23rd Drive West, Suite 105
Everett, WA 98203
Phone: 888-RACKOVN (888-722-5686)
Fax: 425-642-8310
Email: parts@lbcbakery.com
Website: www.lbcbakery.com

REV E 8/2013

READ FIRST

THIS MANUAL MUST BE RETAINED FOR FUTURE REFERENCE. READ, UNDERSTAND AND FOLLOW THE INSTRUCTIONS AND WARNINGS CONTAINED IN THIS MANUAL.

This LBC Rotisserie was manufactured to rigid standards. The appliance has been tested and is listed by Intertek Testing Services (ETL Semko) and meets applicable safety and sanitation standards.

A) The **responsibility of the manufacturer** is to supply suitable, comprehensive instructions and recommendations for proper operation and maintenance.

B) All operations, maintenance and repair of this or any LBC Bakery Equipment appliance must be performed by properly trained and qualified personnel, and all such operations, maintenance and repair must be performed in a diligent manner. It is the **responsibility of the owner/operator** to ensure proper training and diligence of any person coming into contact with either the subject units or the output (product, fumes or otherwise) of the subject units. It is the **responsibility of the owner/operator** to ensure that the subject units are installed and operated in accordance with OSHA Standard 1910.263.

C) A regular periodic program of cleaning, inspection and maintenance must be established and comprehensive maintenance records maintained. It is the **sole responsibility of the owner/operator** to establish, schedule and enforce the frequency and scope of these programs in keeping with recommended practice and with due consideration given to actual operating conditions.

D) The appliance must be operated within limits which will not exceed its working limits. It is the **responsibility of the user** to operate this appliance in accordance with the rules and limits described in this manual and the published product specification sheet, and in accordance with the directions and instructions of the owner/operator of the appliance or employer, and in accordance with applicable federal, state and local laws and ordinances.

TABLE of CONTENTS

Read First 2

Specifications 4

Configurations 5

Conditions of Installation 6

Receiving and Unpacking 7

Installation 8

Controller Operation 11

Parts List 12

Wiring Diagram 16

Warranty 18

SPECIFICATIONS

LBC Kitchen Series Electric Rotisserie ***Models: LCR5 & LCR7***

INSTALLATION REQUIREMENT

Each unit ships separately. Stacking or placing on stand, legs or casters is required.

OPTIONS & ACCESSORIES (Check as Required)

- ☐ Front Door only
- ☐ Front & Rear Doors
- ☐ Rear Door Handle
- ☐ 4" [102mm] Legs
- ☐ 6" [152mm] Legs
- ☐ Swivel Casters
- ☐ Stainless Carousel
- ☐ Non-stick Carousel
- ☐ Stainless Angle Spits
- ☐ Non-Stick Angle Spits
- ☐ Stainless Fork Spits
- ☐ Non-Stick Fork Spits
- ☐ Stainless Baskets
- ☐ Non-Stick Baskets
- ☐ Hand-Held Temperature Probe
- ☐ LST5 Stand with Casters (for LCR5 only)
- ☐ LST7 Stand with Casters (for LCR7 only)
- ☐ LHC7 Holding Cabinet (for LCR7 only)
- ☐ Restraint Kit

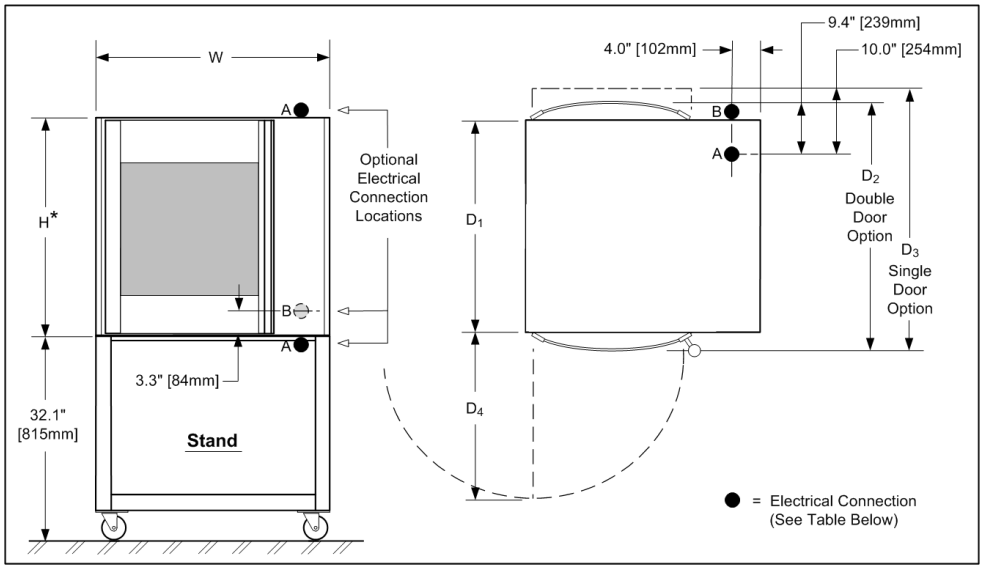

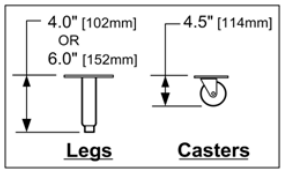

* Appliance heights do not include legs or casters. Add 4.0" [102mm] for countertop legs, 6.0" [152mm] for floor legs or 4.5" [114mm] for casters. Add 32.1" [815mm] for stand with casters.

Model	H*	W	D_1	D_2	D_3	D_4	Actual Weight	Shipping Weight	Freight Class
LCR5	32.5" [826mm]	31.5" [800mm]	21.7" [551mm]	26.3" [668mm]	27.1" [688mm]	24.3" [617mm]	320 lbs [145kg]	450 lbs [204kg]	85
LCR7	38.4" [975mm]	38.9" [988mm]	26.5" [673mm]	32.6" [828mm]	32.6" [828mm]	31.6" [803mm]	460 lbs [209kg]	610 lbs [277kg]	85
LHC7 (Reference)	38.4" [975mm]	38.9" [988mm]	26.5" [673mm]	32.6" [828mm]	32.6" [828mm]	31.6" [803mm]	430 lbs [195kg]	580 lbs [263kg]	85

Model	Voltage	kW	Min Circuit Ampacity		Max Breaker Size	
			1 Phase	3 Phase	1 Phase	3 Phase
LCR5	208 VAC	4.0	40	N/A	60	N/A
	240 VAC	4.0	35	N/A	60	N/A
LCR7	208 VAC	8.0	55	N/A	60	N/A
	240 VAC	8.0	50	N/A	60	N/A
	208 VAC	9.0	N/A	40	N/A	60
	240 VAC	9.0	N/A	35	N/A	60
LHC7 (Reference)	208 VAC	2.0	20	N/A	60	N/A
	240 VAC	2.0	20	N/A	60	N/A

CONFIGURATIONS

Countertop or Floor Mount

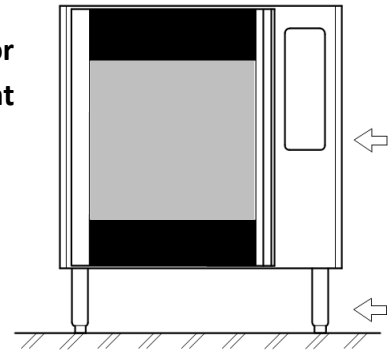

Rotisserie

Countertop: 4.0” [102mm] Legs
Floor: 6.0” [152mm] Legs or 4.5” [114mm] Swivel Casters with Brakes

Stand Mount

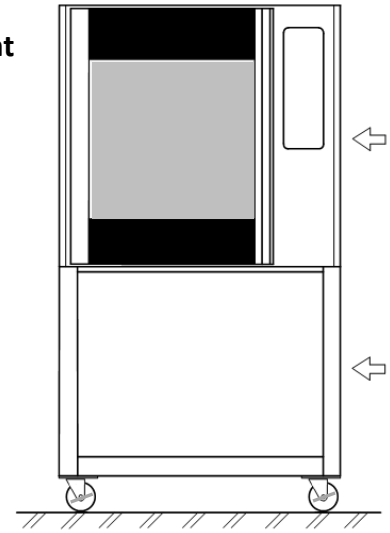

Rotisserie

LST5 Stand (for **LCR5** Rotisserie) or
LST7 Stand (for **LCR7** Rotisserie or **LHC7** Holding Cabinet)

Stacked Appliances

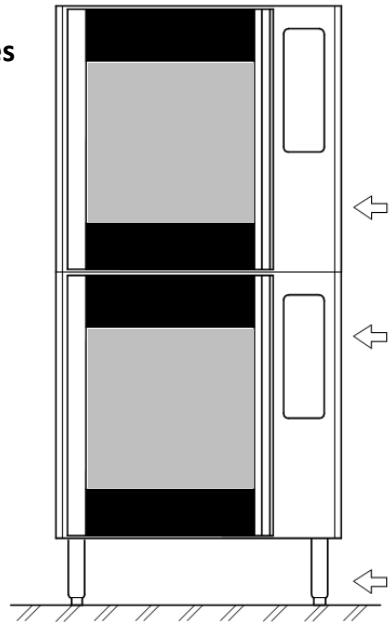

Combinations:

- 2 ea **LCR5** Rotisseries
- 2 ea **LCR7** Rotisseries
- 1 ea **LCR7** Rotisserie + 1 ea **LHC7** Holding Cabinet

NOTE: When a Rotisserie is stacked with a Holding Cabinet, It may be installed on the top or bottom

6.0” [152mm] Legs or
4.5” [114mm] Swivel Casters with Brakes

CONDITIONS of INSTALLATION

LBC Bakery Equipment Co. shall, for a fee contingent on site location and provided that the conditions of installation are met, provide a factory-authorized service agency to install the LBC Rotisserie. The job site must be ready for the installation before LBC Bakery Equipment Co. or its authorized agent arrives. If the installation site is not properly prepared or if there are construction delays, the customer shall be responsible for all expenses incurred during this delay. All expenses resulting from job delay or extension, for reasons beyond the control of LBC Bakery Equipment Co., shall be the responsibility of the customer. Installation shall be conducted during normal business hours. This installation is for a single trip. **Start-up and training are not included.**

IN ALL CASES, THE ELECTRICAL, MECHANICAL CONNECTIONS AND VENTILATION MUST MEET ALL FEDERAL, STATE AND LOCAL CODES OR ORDINANCES.

It is the **responsibility of the owner/operator** to do the following:

A) Secure all required permits and meet all local code requirements.
B) Ensure the installation site is cleared and ready for installation before the authorized installer arrives on site. The site shall be smooth and level.
C) Provide electrical utilities within five (5) feet of the installation location per the specifications provided by LBC Bakery Equipment Co.
D) Provide licensed trades person to make the final electrical connections.
E) Provide adequate ventilation, including vented hoods and associated roof penetrations.
F) Remove all packing materials, crates, etc. resulting from the installation.
G) Provide any sheet metal work required by local codes or otherwise to bridge gaps between appliance and adjacent walls or other building structures.

RECEIVING and UNPACKING

	C A U T I O N	**THIS APPLIANCE WEIGHS UP TO 610 LBS. FOR SAFE HANDLING, INSTALLER SHOULD OBTAIN HELP AS NEEDED OR EMPLOY APPROPRIATE MATERIAL-HANDLING EQUIPMENT (SUCH AS A FORKLIFT, DOLLY OR PALLET JACK) TO REMOVE THE UNIT FROM ITS PACKING MATERIALS AND TO MOVE IT TO THE PLACE OF INSTALLATION.**
	C A U T I O N	**SHIPPING STRAPS ARE UNDER TENSION AND CAN SNAP BACK WHEN CUT.**

Receiving

Upon receiving the appliance, immediately check for damage (both visible and concealed) and loss. **Visible damage must be noted on the freight bill at the time of delivery and signed by the carrier's agent.** Concealed damage or loss means damage or loss which does not become apparent until the merchandise has been unpacked. **If concealed damage or loss is discovered upon unpacking, make a written request for inspection by the carrier's agent within 15 days of delivery.** All packing material should be kept for the inspection. **DO NOT return damaged merchandise to LBC Bakery Equipment; you must file your claim with carrier.**

Location

Prior to unpacking, move the appliance as near to its intended location as practical. Existing packaging will help protect the oven from physical damage normally associated with moving it through hallways and doorways.

Unpacking

The appliance will arrive inside a wood frame and affixed to a pallet. Remove the wood frame and strapping bands before lifting the unit from the pallet and placing in its intended location.

INSTALLATION (Part 1 of 3)

W A R N I N G	**INSTALLATION OF THIS APPLIANCE MUST BE DONE BY PERSONNEL QUALIFIED TO WORK WITH ELECTRICITY. IMPROPER INSTALLATION CAN CAUSE INJURY TO PERSONNEL AND/OR DAMAGE TO EQUIPMENT.**
C A U T I O N	**ALL ELECRICAL, MECHANICAL CONNECTIONS AND VENTILATION MUST MEET ALL FEDERAL, STATE AND LOCAL CODES OR ORDINANCES.**
C A U T I O N	**THIS APPLIANCE WEIGHS UP TO 610 LBS. FOR SAFE HANDLING, INSTALLER SHOULD OBTAIN HELP AS NEEDED OR EMPLOY APPROPRIATE MATERIAL-HANDLING EQUIPMENT (SUCH AS A FORKLIFT, DOLLY OR PALLET JACK) TO REMOVE THE UNIT FROM ITS PACKING MATERIALS AND TO MOVE IT TO THE PLACE OF INSTALLATION.**
C A U T I O N	**ANY STAND, COUNTER OR OTHER DEVICE ON WHICH THIS APPLIANCE WILL BE LOCATED MUST BE DESIGNED TO SUPPORT ITS WEIGHT**
N O T I C E	During the first few hours of operation, you may notice a small amount of smoke coming from the rotisserie and/or a faint odor. This is normal in a new oven and will disappear after a few hours of use.

Clearances

Minimum clearance from combustible construction: 0" [0mm] from sides, 1" [25mm] from back (single-door ovens only) or 6" [152mm] from back (double-door ovens) and 6" [152mm] from top. This appliance may be installed on combustible surfaces. The installation location must allow adequate clearances for servicing and for the proper operation of the loading door(s).

Legs, Casters or Stand

Legs or casters are available for single and stacked appliance combinations. Additionally, a single unit may have a stand. install the appliance on legs, casters or a stand with the stainless steel hardware provided (16 ea of the following: 10-1.2 x 20mm hex bolts, 10mm split lock washer and 10mm plain washers).

Stacking

If stacking appliances, gently place the top oven on the bottom oven with the doors and sides aligned. When a Rotisserie is stacked with a Holding Cabinet, it may be installed on the top or bottom. Secure the appliances through the pre-attached stacking brackets at the underside of each appliance and into the threaded receiving holes at the topside of each appliance. Use the stainless steel hardware provided (16 ea of the following: 10-1.2x20mm hex bolts, 10mm split lock washers and 10mm plain washers). Check both appliances to ensure they are level.

Skewers or Baskets

Unpack the optional skewers or baskets (shipped inside the oven) and install on the carousel wheels. Skewers slide into the existing holes in the wheels. Baskets hang from the pins located at the inner surfaces of the wheels. No mounting hardware is required to install these parts. Before installing, wash parts in warm, soapy water and rinse with clean water.

INSTALLATION (Part 2 of 3)

Drip Plates

Unpack both drip plates (shipped inside the oven) and place at the bottom of the oven cook chamber.

Electrical Power Connection

A mounting plate with a 1.25" [32mm] hole to connect an electrical conduit connector is installed at the bottom of the control compartment. The plate may be moved to the top or rear of the appliance to accommodate different connection points as shown in the Specifications section of this manual. Use flexible conduit or cord if the oven is installed with casters, providing sufficient length to allow the oven to be moved for cleaning without applying tension to the electrical connections.

Safety Tether

Units on casters must be secured to a building structure with the safety tether provided. Affix one end of the tether to a side panel of the unit (the non-control side is recommended) using any existing panel mount screw. An additional hole must be drilled next to the existing mount screw to affix the 2-hole plate located on either end of the tether. A drill bit and mounting hardware are provided in the tether kit. Attach the loose end of the tether to a secure structure and affix the warning label provided ("WARNING – ATTENCION: RISK OF ELECTRIC SHOCK …") to the control-side panel.

Interim Inspection

Prior to turning oven on, verify the following:

- Loading door(s) open/close freely past 90° without obstruction
- All packing materials have been removed from inside oven
- Carousel wheel shipping ties (at left hand carousel support hub and/or right hand drive arm) have been removed
- Clear protective plastic covering data plate has been removed
- Fingerprints, tape residue, etc. have been cleaned from oven interior and exterior
- Any loose screws have been tightened; any loose power connections have been tightened

Controller Startup Check (Refer to Controller Operation section)

While oven is connected to live power, press the control panel power button and verify that the following conditions occur on initial startup:

- Recipe number appears in the recipe LED display
- For recipes 1 through 6, the corresponding "quick select" recipe button status light is illuminated
- Oven pre-heats (elements are energized) to the temperature programmed in the open recipe
- Carousel wheel rotates
- Interior lights are off
- Interior heat-circulation fans are on
- Control compartment axial fan is on
- Values appear in the actual temp, set point and timer LED displays

INSTALLATION (Part 3 of 3)

Loading Door Switch Check

While the oven is preheating, open the loading door and verify the following conditions:

- The word "door" flashes in the timer display (NOTE: For ovens with two doors, each door must be checked independently)
- Heat is off (elements are de-energized)
- Carousel wheel stops rotation
- Interior lights are off
- Interior heat-circulation fans are off

Jog Feature Check

While the oven is preheating, open the loading door and allow the carousel to stop rotating. With the door open, press-and-hold the jog button and confirm that the carousel rotates. Also confirm that the carousel stops when the jog button is released.

Interior Lights Check

While the oven is preheating, press the start/stop button and verify that both interior lights illuminate.

Set Temperature Scale

Simultaneously press-and-hold set point up and down arrows for 3 seconds to change scale from ^{o}F to ^{o}C and back.

Controller Calibration

Insert a thermocouple inside the appliance cook chamber at the center of any oblong hole in the fan cover. Route the probe wire out of the loading door opening and adjust the oven set point to 350°F (177°C). Allow the oven to reach the set point and stabilize for at least 90 minutes. If the thermocouple reading and the controller actual temperature differ by more than a couple degrees, the control must be calibrated. To begin, make a note of the temperature difference between the thermocouple and the controller actual temperature, then turn the control power button off and hold the probe button for 3 seconds until a value appears in the set point display. Use the set point up or down arrow to add or subtract the difference in temperature. (EXAMPLE: If the thermocouple is 10° higher than the actual temperature, add 10. If the thermocouple is 10° lower than the actual temperature, subtract 10.) Turn the control button on and re-check the thermocouple against the controller actual temperature. Repeat this procedure until the two temperatures match.

CONTROLLER OPERATION

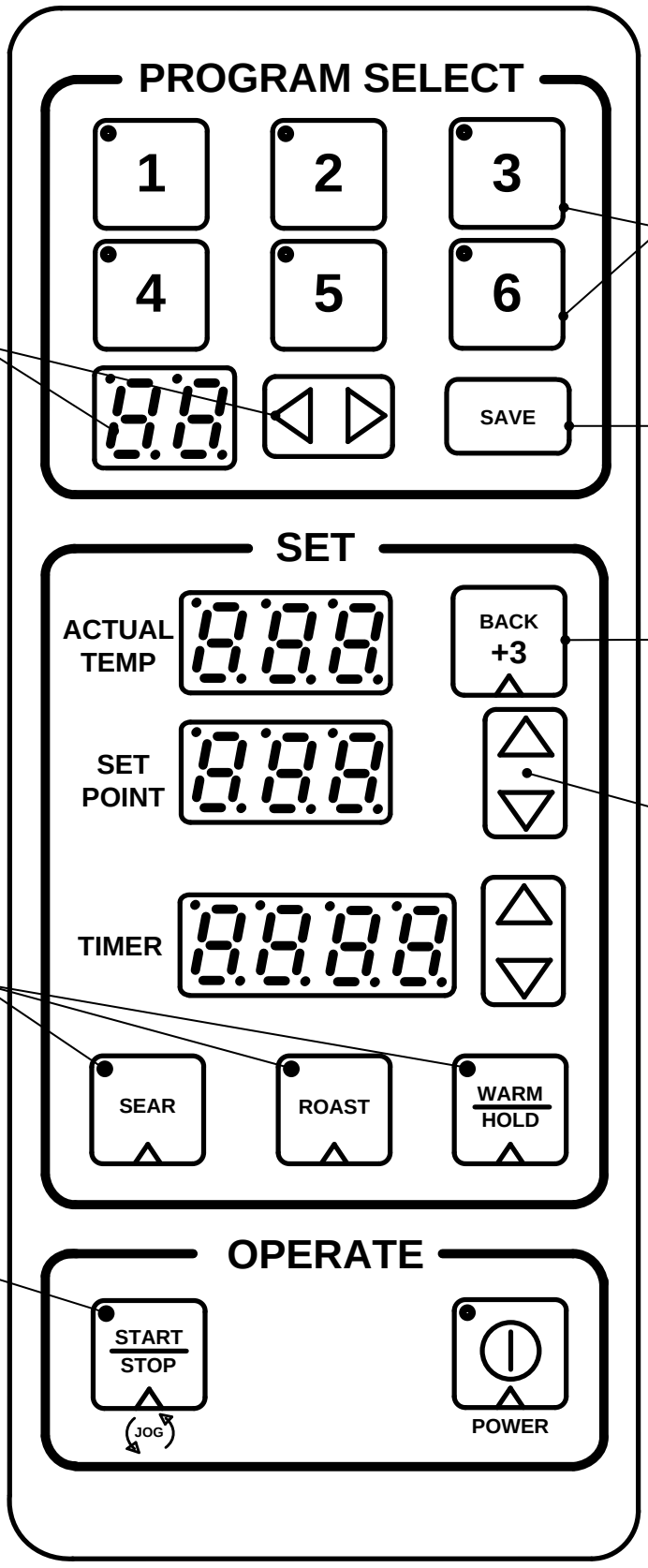

Recipe Arrow Buttons & Display
Use arrow button to scroll through recipes (1 through 20); recipe number will appear in display

Quick-Select Recipe Buttons
Easy access to most-frequently-used recipes

Recipe Save Button
After creating a recipe, press this button twice to save it

Back +3 Button
Use this button to go back one event while a recipe is running

Change Temperature Scale
Simultaneously press-and-hold up and down arrows for 3 seconds to change scale from ^{o}F to ^{o}C and back

Cook Event Buttons
Use these when creating a recipe; up to 3 events may be programmed
(NOTE: To ignore sear and/or roast events, enter a time of 00:00 for that event)

Timer Start/Stop and Reset Button
Press to start/stop timer; press-and-hold for 3 seconds to reset timer

Jog Button
Press-and-hold this button to rotate carousel position when loading door is open

PARTS LIST (Part 1 of 4)

WARNING	**BOTH HIGH AND LOW VOLTAGES ARE PRESENT INSIDE OF THIS APPLIANCE WHEN THE UNIT IS PLUGGED/WIRED INTO A LIVE RECEPTACLE. BEFORE REPLACING ANY PARTS, DISCONNECT THE UNIT FROM THE ELECTRIC POWER SUPPLY.**
CAUTION	**USE OF ANY REPLACEMENT PARTS OTHER THAN THOSE SUPPLIED BY LBC OR THEIR AUTHORIZED DISTRIBUTORS CAN CAUSE BODILY INJURY TO THE OPERATOR AND/OR DAMAGE TO THE APPLIANCE AND WILL VOID ALL WARRANTIES.**
NOTICE	Service on this or any other LBC appliance must be performed by qualified personnel. For an approved service representative in your area, visit our website at www.lbcbakery.com or call our factory toll free at 1-888-722-5686.

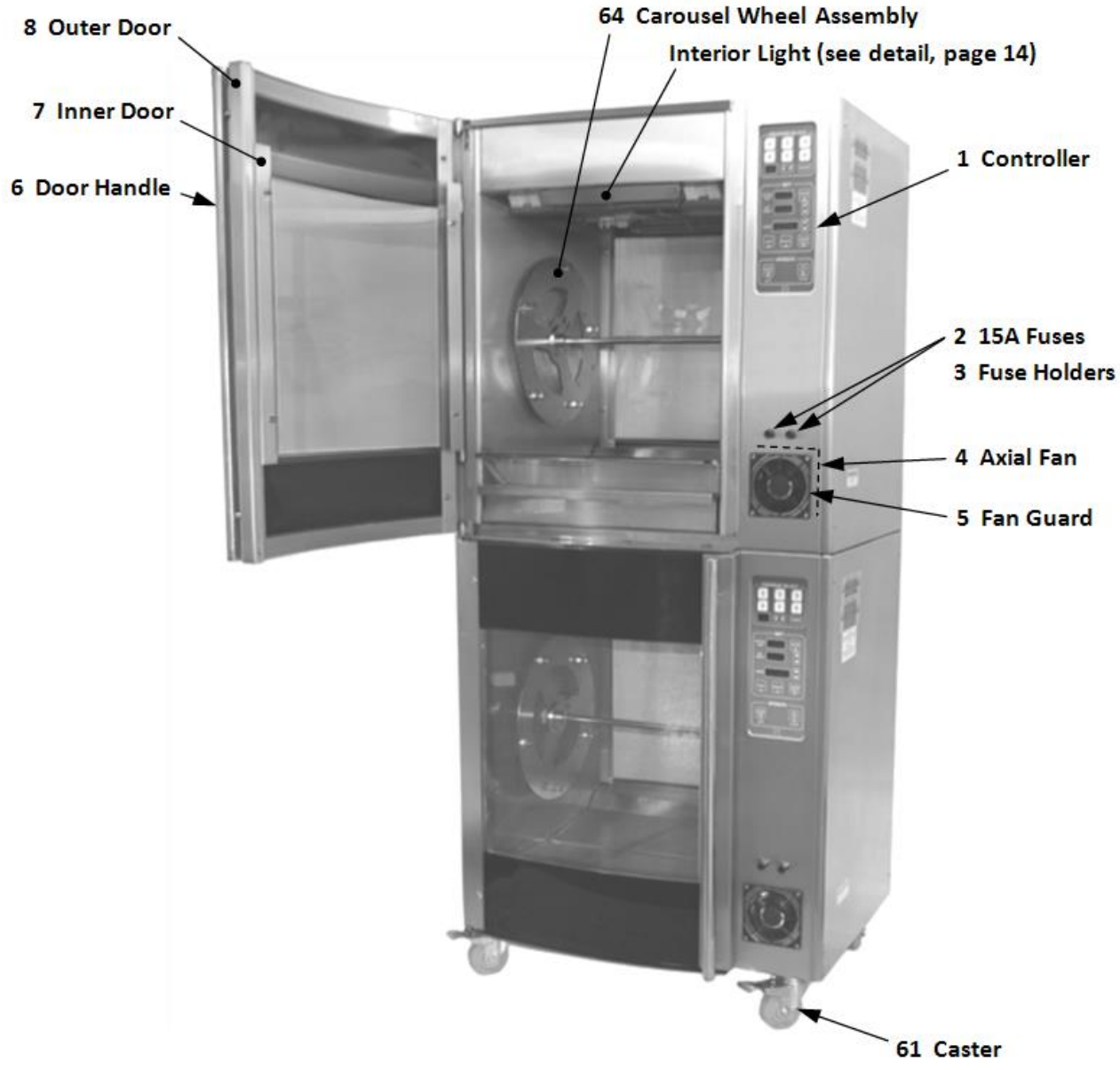

PARTS LIST (Part 2 of 4)

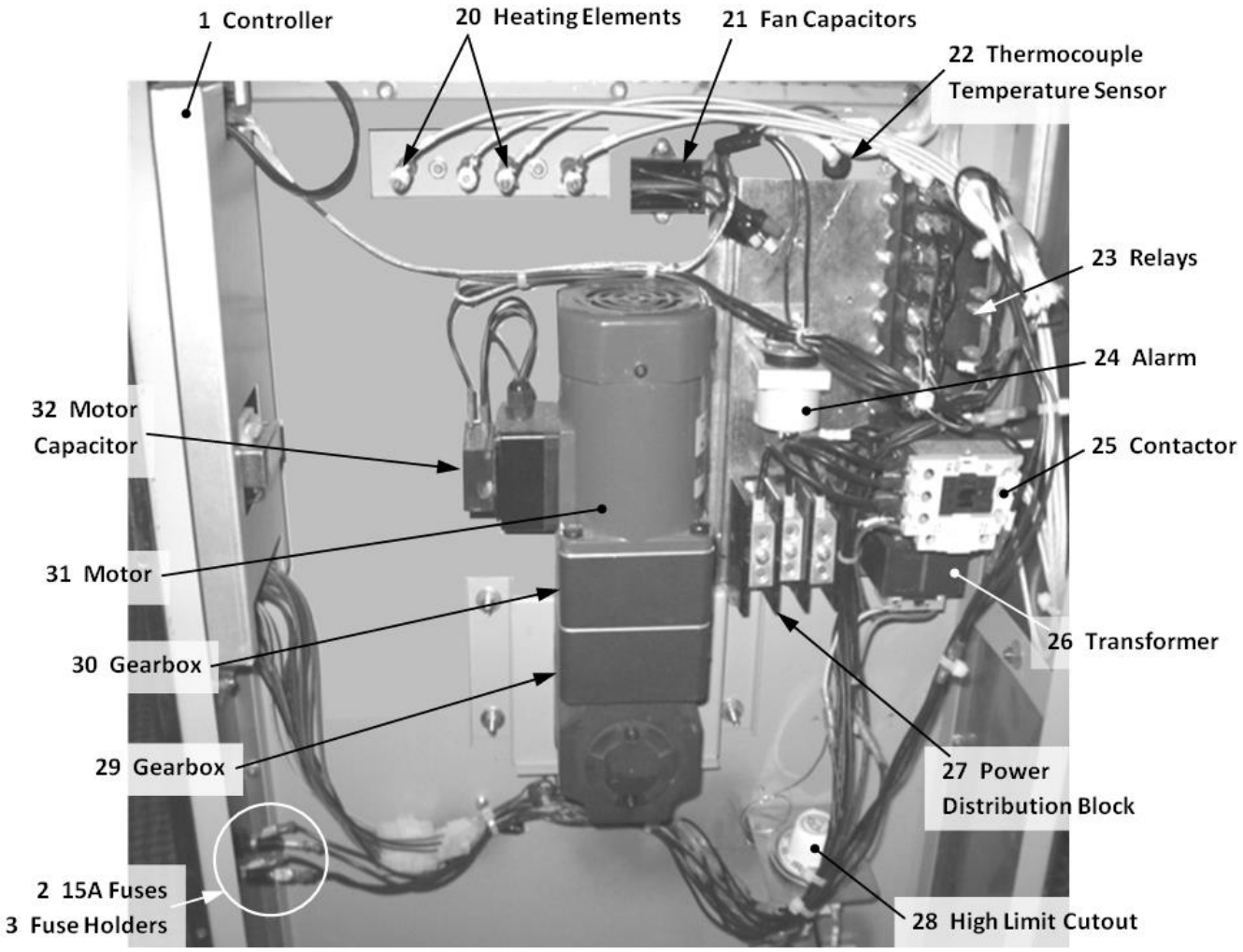

Control Compartment (Side Panel Removed)

Thermal Snap Disc

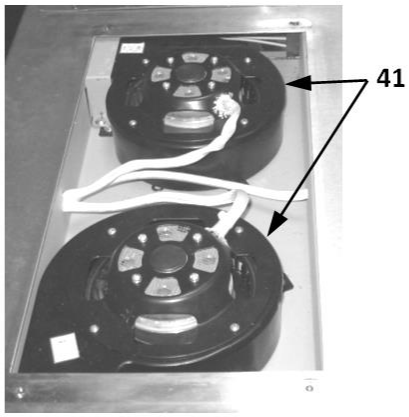

Ceiling Fans

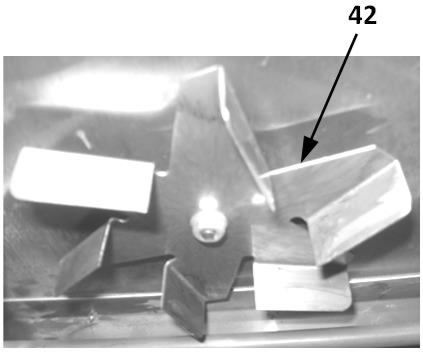

Ceiling Fan Blade

PARTS LIST (Part 3 of 4)

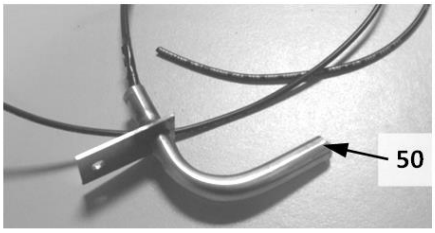

Door Switch

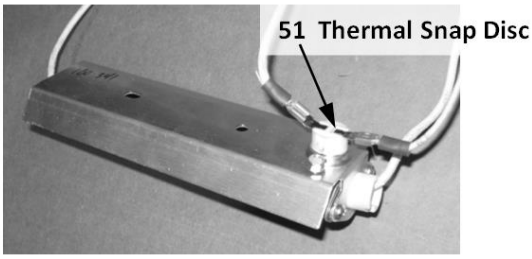

Interior Lights (Reverse View) (7-Spit only)

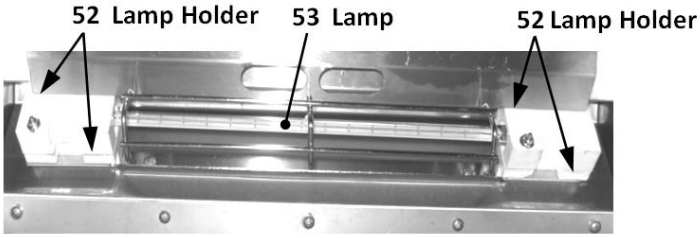

Interior Lights (5-Spit only)

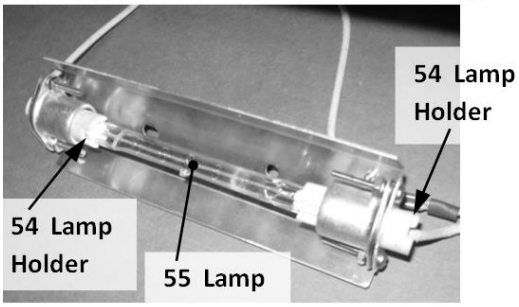

Interior Lights (7-Spit only)

Item No.	Part Description	Quantity	Part No.	Usage
1	Controller	1	40102-76	
2	15A Fuse	2	30900-01	
3	Fuse Holder	2	30901-02	
4	Axial Fan	1	71500-33	
5	Fan Guard	1	50201-11	
6	Handle, Loading Door	1	180-781-1	5-Spit only
	Handle, Loading Door	1	180-781-2	7-Spit only
7	Loading Door, Inner	1	71300-32	5-Spit only
	Loading Door, Inner	1	71300-30	7-Spit only
8	Loading Door, Outer - Front	1	71300-33F	5-Spit, front door only
	Loading Door, Outer - Rear	1	71300-33R	5-Spit, rear door only
	Loading Door, Outer - Front	1	71300-31F	7-Spit, front door only
	Loading Door, Outer - Rear	1	71300-31R	7-Spit, rear door only
20	Element, 2kW	2	11090-37	5-Spit only
	Element, 2kW	0 or 1	11090-39	7-Spit, 1 phase only
	Element, 3kW	2 or 3	11090-40	7-Spit only
21	Capacitor, Fan (2.2µF)	2	40704-11	
22	Thermocouple Temperature Sensor	1	41100-31	
23	Relay	3	30701-05	
24	Alarm	1	30802-07-1	
25	Contactor	1	30700-17	
26	Transformer	1	31400-26	
27	Power Distribution Block	1	30500-07	
28	High Limit Cutout	1	30401-33	
29	Gearbox (90 Degrees, 1:90 Ratio)	1	30200-50	
30	Gearbox (1:10 Ratio)	1	30200-49	
31	Motor	1	30200-51	

PARTS LIST (Part 4 of 4)

Item No.	Part Description	Quantity	Part No.	Usage
32	Capacitor, Motor (4.0µF)	1	40704-10	
40	Thermal Snap Disc (Relay Protection)	2	30301-05	
41	Fan, Ceiling	2	71500-32	
42	Fan Blade, Ceiling	2	180-205-1	
50	Door Switch Assembly	1 or 2	180-767-2	
51	Thermal Snap Disc (Lights)	2	30301-06	7-Spit only
52	Lamp Holder	4	31602-09	5-Spit only
53	Lamp, 1kW	2	31602-08	5-Spit only
54	Lamp Holder	4	31602-21	7-Spit only
55	Lamp, 500W	2	31603-87	7-Spit only

Optional Parts and Accessories

Item No.	Part Description	Quantity	Part No.	Usage
60	Stand with Casters	1	LST7	7-Spit only
61	Caster (Swivel with Brake)	4	72901-33	
62	4” Adjustable Leg	4	72901-35	
63	6” Adjustable Leg	4	72901-34	
64	Carousel Assembly, Non-Stick Coating	1	180-768-1C	5-Spit only
	Carousel Assembly, Stainless Steel	1	180-768-1	5-Spit only
	Carousel Assembly, Non-Stick Coating	1	180-768-2C	7-Spit only
	Carousel Assembly, Stainless Steel	1	180-768-2	7-Spit only
65	Angle Spit, Stainless Steel	5	LCR5-SV	5-Spit Only
	Angle Spit, Non-Stick Coating	5	LCR5-SV-C	5-Spit Only
	Angle Spit, Stainless Steel	7	LCR7-SV	7-Spit Only
	Angle Spit, Non-Stick Coating	7	LCR7-SV-C	7-Spit Only
66	Fork Spit, Stainless Steel	5	LCR5-SF	5-Spit Only
	Fork Spit, Non-Stick Coating	5	LCR7-SF-C	5-Spit Only
	Fork Spit, Stainless Steel	7	LCR5-SF	7-Spit Only
	Fork Spit, Non-Stick Coating	7	LCR7-SF-C	7-Spit Only
67	Basket, Stainless Steel	5	LCR5-SB	5-Spit Only
	Basket, Non-Stick Coating	5	LCR5-SB-C	5-Spit Only
	Basket, Stainless Steel	7	LCR7-SB	7-Spit Only
	Basket, Non-Stick Coating	7	LCR7-SB-C	7-Spit Only
68	Restraint Kit (Safety Tether)	1	72609-51	
69	Stacking Kit	1	Kit, Rotisserie 4	
70	Hand Held Probe Kit	1	Kit, Rotisserie 5	

WIRING DIAGRAM (Part 1 of 2)

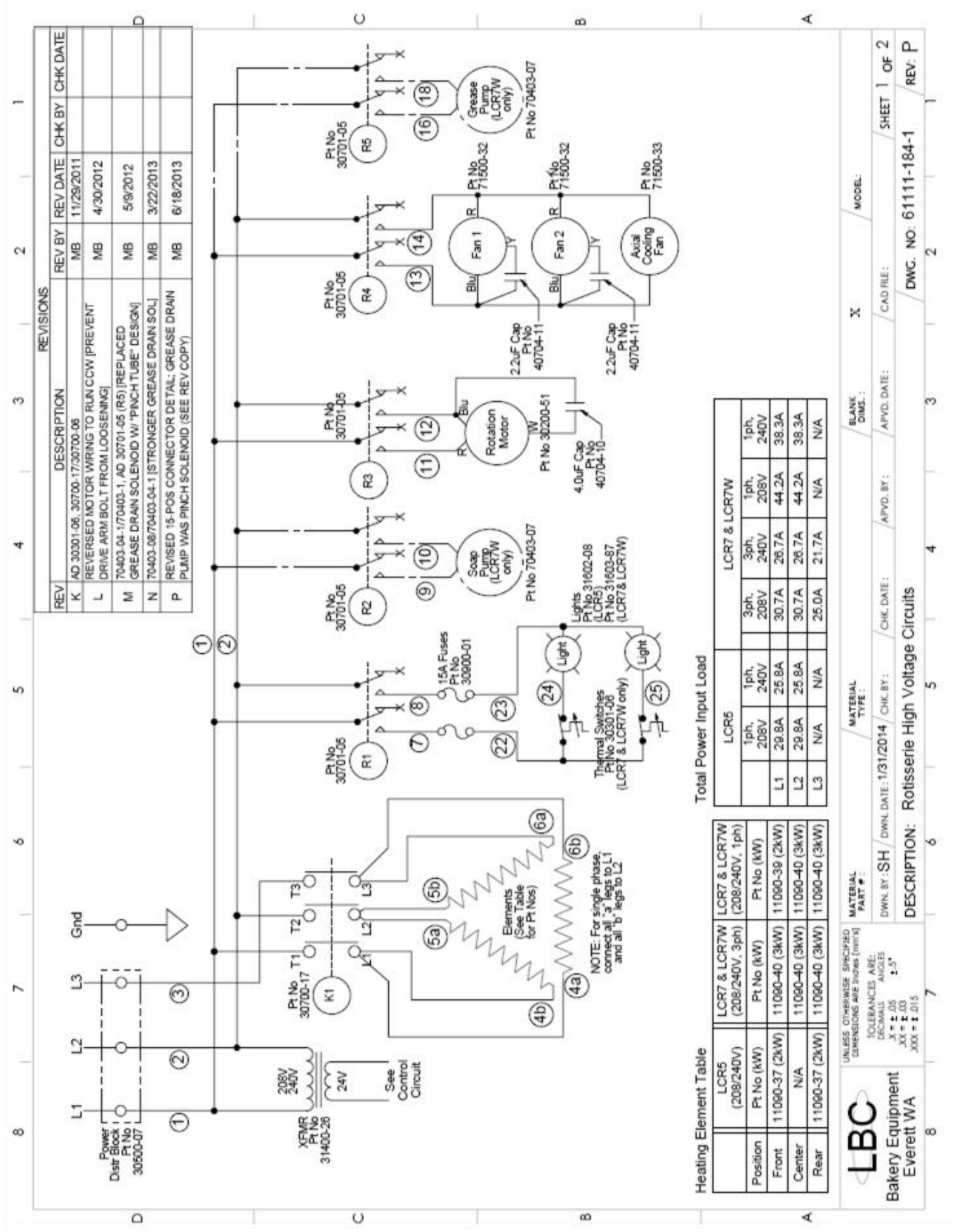

WIRING DIAGRAM (Part 2 of 2)

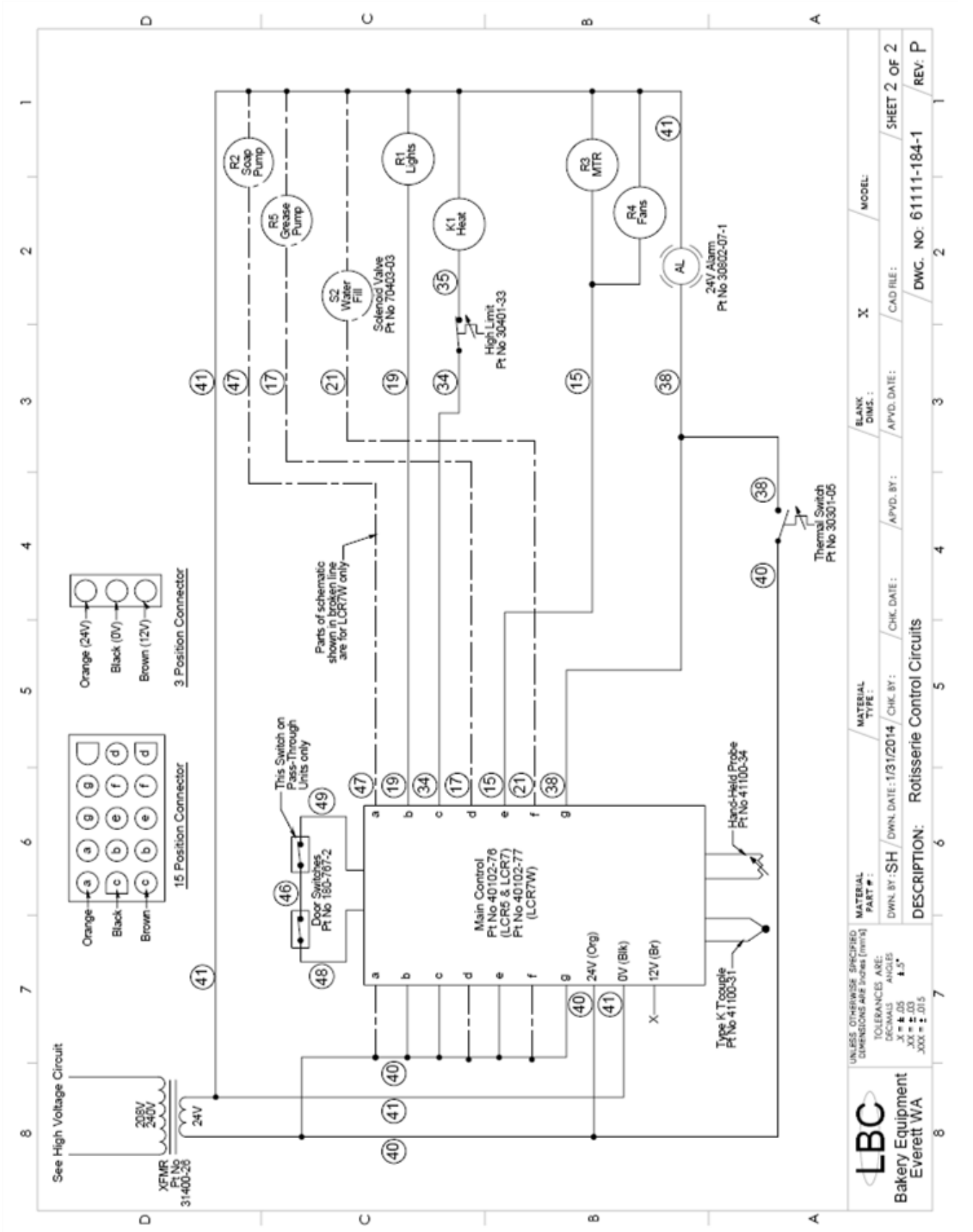

LIMITED WARRANTY

LBC Bakery Equipment ("LBC Equipment") has been skillfully manufactured, carefully inspected and packaged to meet rigid standards of excellence. LBC Bakery Equipment, Inc. (LBC) warrants products produced and sold by LBC and its duly authorized agents against defects in materials and workmanship within the following limitations:

What is Provided:

- Limited replacement parts as specified below, including standard ground shipping from LBC or service parts center when required.
- Limited labor for repair as specified below, including authorized service agent's transportation, portal to portal, up to one hundred (100) miles round trip and two (2) hours travel time.
- LBC, or an authorized service representative, will repair or replace, at LBC's sole discretion, any LBC equipment, including but not limited to the listed exclusions.

Coverage Period:

Extending from the date of shipment from LBC or its duly authorized dealer/distributor for the specified period:

- LRO and LMO Model Rack Ovens, LRP Model Rack Proofers, LRPR Model Retarder Proofers, LCR Model Rotisseries and LHC Model Holding Cabinets for a period of one (1) year limited parts and labor.
- Replacement parts shall be warranted for a period of ninety (90) days after installation by an authorized LBC service agent.

Conditions:

- Covered equipment must have been properly installed according to the requirements of the installation manual and all applicable local codes.
- The equipment shall not have been abused, misused or neglected or used for purposes other than intended by LBC.
- Water connected to the appliance shall have been in compliance with the following requirements:
  - Cold Water: 30 - 80 PSI
  - pH: 7 - 7.5
  - Conductivity: < 1/500,000 Ω per inch
  - Total Dissolved Solids: < 100 ppm
  - Hardness: 6.3 - 8.8 grains per gallon
  - Maximum Salinity and Ion content:

Chlorides:	< 30 ppm
Sulfates:	< 40 ppm
Iron:	< 0.1 ppm
Copper:	< 0.05 ppm
Manganese:	< 0.05 ppm
- It is the responsibility of the purchaser to install and maintain the water supply to the appliance. Failure to provide satisfactory water quality in accordance with the operating manual requirements can cause damage to internal components and will VOID the warranty.
- All repair work is to be performed by an LBC authorized service agent.
- Equipment must be at the installation location of the original purchaser/user and shall not have been resold or reclaimed by another party.

Conditions (Continued):

- LBC equipment is for commercial use only. If sold as a component of another (OEM) manufacturer's equipment, or if used as a consumer product, such equipment is sold AS IS and without any warranty.
- Conditions of sale of the equipment shall have been met in full.
- The request for repair shall be made within the limited period of the warranty.

Failure to meet the above conditions will void this warranty.

Exclusions:

This warranty does not cover the following:

- Routine general maintenance, or periodic adjustment.
- Thermostat calibration after the first 30 days of use.
- Glass, Lamps, Gaskets, Oven Racks and other consumable parts.
- Air and gas burner adjustments.
- Fuse replacement.
- Cleaning and adjusting burners and pilot burners.
- Rack oven shutter adjustments.
- Repairs adjustments and corrections in the refrigeration portion of retarder/proofers resulting from the improper installation.
- Retightening of screws and fasteners.
- Failures caused by erratic or inadequate electrical, water, ventilation or gas service.
- Unauthorized repairs.
- Premature rusting, corrosion, or mineral build up caused by incoming water.
- Attached water treatment systems.
- Expedited freight on replacement parts other than standard ground shipments.
- Ordinary wear and tear.
- Use of the equipment for purposes other than those intended including non-commercial use such as residential or domestic.
- Appliances installed outside the contiguous U.S., including Alaska and Hawaii, and Canada.
- Incidental costs, charges, loss of business and damages as incurred by the user or others as a result of the use or failure of the equipment.
- Work and workmanship of the authorized service agent or others in the repair of the equipment.
- Other failures that are beyond the reasonable scope of this warranty.
- Damage caused during shipment is to be reported to the carrier, is not covered under this warranty, and is the sole responsibility of the purchaser/user.
- Natural disaster.

This warranty is exclusive and in lieu of all other warranties, expressed or implied, including expressed or implied warranties of merchantability or fitness for a particular purpose, each of which is hereby expressly disclaimed. The remedies described herein are exclusive and in no event shall LBC be liable for special, consequential or incidental damages for the breach or delay in the performance of this warranty