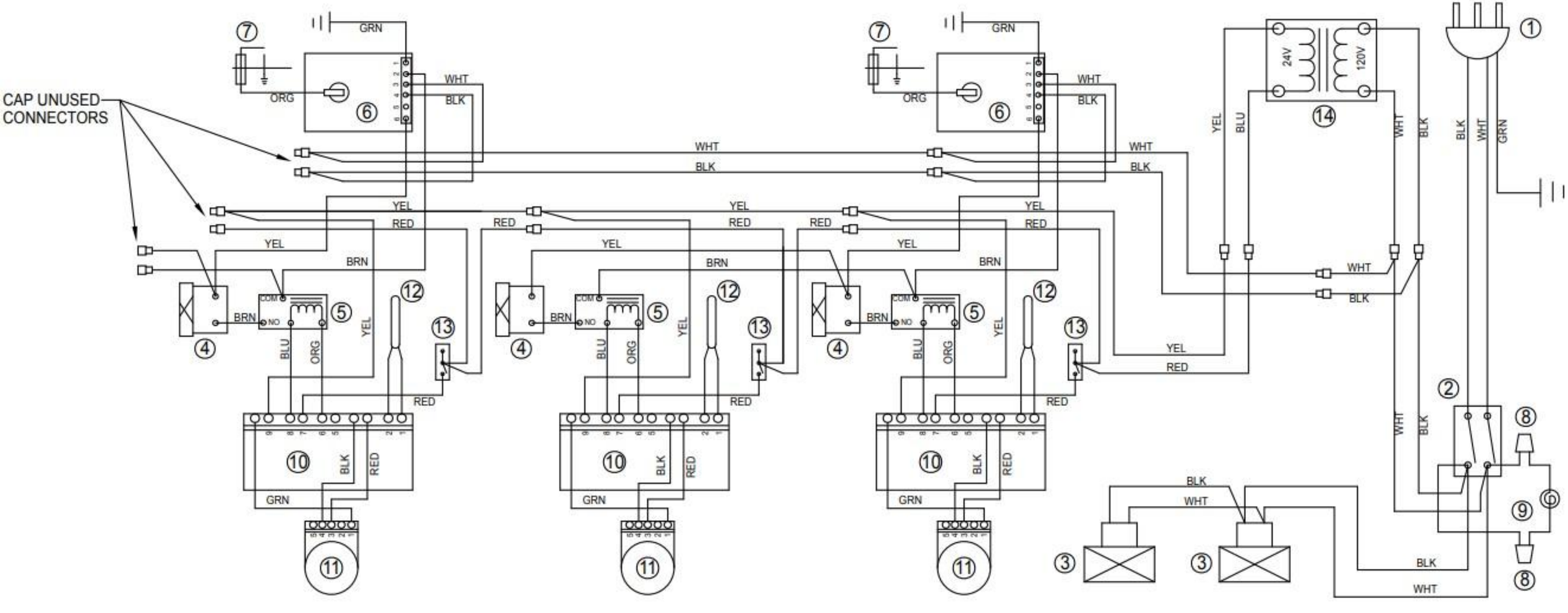
CAP UNUSED CONNECTORS
GRN
ORG
WHT
BLK
YEL
RED
BRN
BLU
COM
NO
24V
120V