NEMCO
FOOD EQUIPMENT

55975 Chicken Slicer, ½" Slices
55975-1 Chicken Slicer, 3/8" Slices
55975-2 Chicken Slicer, 1/4" Slices
55975-SC Chicken Slicer, Sharp, ½" Slices
55975-SC-TL Chicken Slicer, Sharp, ½" Slices, Tall Legs
55975-1SC Chicken Slicer, Sharp, 3/8" Slices
55975-1SC-TL Chicken Slicer, Sharp, 3/8" Slices, Tall Legs
55975-2SC Chicken Slicer, Sharp, 1/4" Slices

OPERATING INSTRUCTIONS

Important

1. To get the best operation and life from your machine, please read and comply with these instructions.
2. Clean machine thoroughly before and after each use using cleaning instructions below.
3. Minimize the use of alkaline cleaners as they may cause pitting and dulling of the finish.
4. Note: -( )SC models have sharp blades.

Preparation

1. Place the unit on a good firm work surface.
2. If unit fails to work properly when first operated call NEMCO customer service at 1-800-782-6761

Operation

1. Hold HANDLE in its UP position and place the product on the BLADES.
2. **Remove hand from the cutting area** and firmly bring HANDLE down, to cause the PUSH PLATE to force the product through the BLADES.

Cleaning

1. Remove the RING PIN and lift off the HANDLE.
2. Lift off the BLADE ASSEMBLY.
3. Reassemble by reversing the above procedures

Safety Instructions

The blade assembly is easily removable for cleaning and is not fastened to the base! Be careful when handling the machine to keep the blade assembly in place.

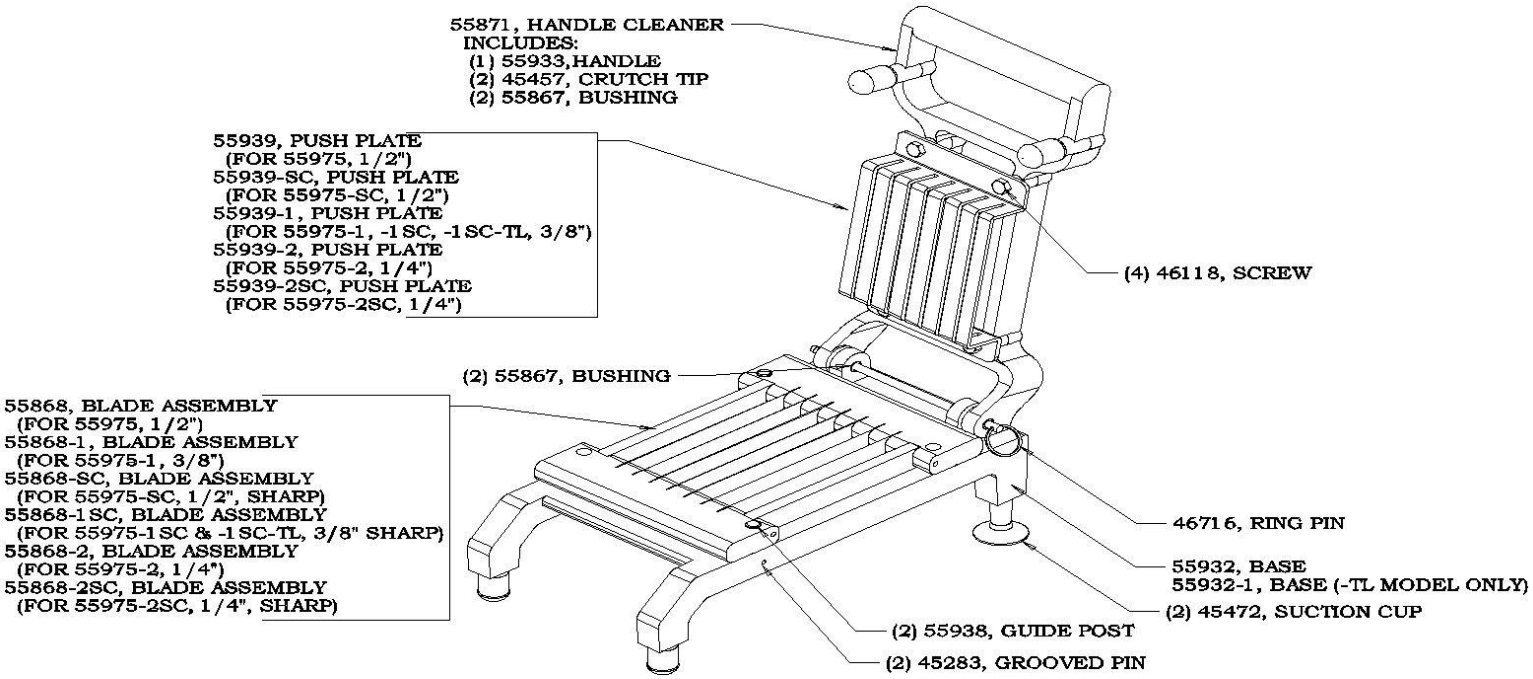

NEMCO FOOD EQUIPMENT 301 Meuse Argonne, Hicksville, OH 43526
Phone: (419) 542-7751 Fax: (419) 542-6690 Toll free: 1-800-782-6761 47095
www.nemcofoodequip.com
8-21-2018