OPERATOR'S MANUAL

Model C300
Slush Freezer

Original Operating Instructions

055072-M

9/26/08 (Original Publication)
(Updated 9/2/2020)

Complete this page for quick reference when service is required:

Taylor Distributor: _____

Address: _____

Phone: _____

Service: _____

Parts: _____

Date of Installation: _____

Information found on the data label:

Model Number: _____

Serial Number: _____

Electrical Specs: Voltage_____ Cycle_____

Phase_____

Maximum Fuse Size: _____ A

Minimum Wire Ampacity: _____ A

Note: *Continuing research results in steady improvements; therefore, information in this manual is subject to change without notice.*

Note: *Only instructions originating from the factory or its authorized translation representative(s) are considered to be the original set of instructions.*

© 2006 Taylor Company
055072-M

Any unauthorized reproduction, disclosure, or distribution of copies by any person of any portion of this work may be a violation of copyright law of the United States of America and other countries, could result in the awarding of statutory damages of up to $250,000 (17 USC 504) for infringement, and may result in further civil and criminal penalties. All rights reserved.

TAYLOR®

Taylor Company
750 N. Blackhawk Blvd.
Rockton, IL 61072

Table of Contents

Section 1: To the Installer

Installer Safety 1-1
Site Preparation 1-1
Water-Cooled Refrigeration Machines 1-2
Water Connections 1-2
Electrical Connections. 1-3
Beater Rotation 1-4
Initial Freezing Cylinder Cleaning 1-4
Refrigerant 1-4

Section 2: To the Operator

Compressor Warranty Disclaimer 2-2

Section 3: Safety

Section 4: Operator Parts Identification

Exploded View 4-1
Beater Door Assembly 4-2
Accessories. 4-3

Section 5: User Interface

Control Switch. 5-1
Liquid Crystal Display 5-1
Operational Mode Display. 5-1
Operator Menu Display 5-2
Operator Menu Timeout 5-2
Finding Current Fault Conditions 5-2
Syrup Out Indicator 5-7
CO2 Out Indicator 5-7
Water Out Indicator 5-7
Audio Alarm Silencer. 5-7
Product Light 5-7
Sampling Valve 5-7
Daily Procedures. 5-7

Table of Contents

Section 6: Operating Procedures

Assembly 6-1
Sanitizing 6-5
Priming/Brixing 6-7
120 Day Closing Procedure 6-10
Draining Product from the Freezing Cylinder 6-10
Rinsing 6-10
Cleaning 6-11
Disassembly 6-11
Brush-Cleaning 6-12

Section 7: Operator Checklist

During Cleaning and Sanitizing 7-1
Troubleshooting Bacterial Count 7-1
Regular Maintenance Checks. 7-1
Winter Storage 7-1

Section 8: Troubleshooting Guide

Section 9: Parts Replacement Schedule

Section 10: Limited Warranty on Equipment

Section 11: Limited Warranty on Parts

The following information has been included in the manual as safety and regulatory guidelines. For complete installation instructions, please see the Installation Checklist.

Installer Safety

IMPORTANT! *In all areas of the world, machines should be installed in accordance with existing local codes. Please contact your local authorities if you have any questions.*

Care should be taken to ensure that all basic safety practices are followed during the installation and servicing activities related to the installation and service of Taylor® machines.

- *Only Taylor service personnel should perform installation, maintenance, and repairs on Taylor machines.*
- *Authorized service personnel should consult OSHA Standard 29CFRI910.147 or the applicable code of the local area for the industry standards on lockout/tagout procedures before beginning any installation or repairs.*
- *Authorized service personnel must ensure that the proper personal protective equipment (PPE) is available and worn when required during installation and service.*
- *Authorized service personnel must remove all metal jewelry, rings, and watches before working on electrical equipment.*

DANGER! The main power supply(s) to the machine must be disconnected prior to performing any installation, maintenance, or repairs. Failure to follow this instruction may result in personal injury or death from electrical shock or hazardous moving parts, as well as poor performance or damage to the machine.

Note: *All repairs must be performed by a Taylor service technician.*

WARNING! This machine has many sharp edges that can cause severe injuries.

1

Site Preparation

Review the area where the machine will be installed. Make sure that all possible hazards to the user and machine have been addressed.

WARNING! Only install this machine in a location where its use and maintenance is restricted to trained personnel. Failure to comply may result in personal injury.

For Indoor Use Only: This machine is designed to operate indoors, under normal ambient temperatures of 70°F to 75°F (21°C to 24°C). The machine has successfully performed in high ambient temperatures of up to 104°F (40°C) at reduced capacities.

WARNING! This machine must **NOT** be installed in an area where a water jet or hose can be used. **NEVER** use a water jet or hose to rinse or clean the machine. Failure to follow this instruction may result in electrocution.

WARNING! Asphyxiation Hazard!
If used with CO_2 (Carbon Dioxide) or N_2 (Nitrogen), always make sure the area is well ventilated.
Vent exhaust gas to outside atmosphere using a hose. Failure to do so can cause serious injury.

CAUTION! This machine must be installed on a level surface to avoid the hazard of tipping. Extreme care should be taken in moving this machine for any reason. Two or more persons are required to safely move this machine. Failure to comply may result in personal injury or damage to the machine.

The authorized installer should inspect the machine for damage and promptly report any damage to the local authorized Taylor distributor.

This machine is made using USA sizes of hardware. All metric conversions are approximate and vary in size.

Water-Cooled Refrigeration Machines

(Water-Cooled Machines Only)

On the back of the machine, two additional 3/8 in. (9.5 mm) F.P.T. water connections for condenser inlet and outlet have been provided for easy hookup. Permanently connect the machine using 3/8 in. (9.5 mm) inside diameter water lines. Flexible lines are recommended if local codes permit. Failure to use adequately sized water lines may cause the unit to go on high head pressure and shut down.

Do not install a hand shutoff valve on the out line. Water-cooled units are counter flow and the water should flow in this order: first through the automatic water valve; second, through the inlet located at the bottom of the condenser; third, through the outlet fitting located at the top of the condenser **to an open trap drain.**

Important! *Water pressures are preset at the factory.* ***Do not*** *adjust the water pressure. Improper water adjustments may cause operation discrepancies.*

IMPORTANT! *A backflow prevention device is required on the incoming water connection side. Please see the applicable national, state, and local codes for determining the proper configuration. Water pressure to the unit must not exceed 150 psi (1034 kPa).*

Water Connections

An adequate cold water supply must be provided with a hand shutoff valve. On the back of the unit, two 3/8 in. (9.5 mm) male flare water connections have been provided for easy hookup. Permanently connect the machine using 3/8 in. (9.5 mm) inside diameter water lines. A flexible line is recommended, if local codes permit. A minimum of 25 psi. (172 kPa) water pressure is required to avoid having the unit cut out the low water pressure switch. A booster pump must be provided if this pressure is not available.

Note: *Water lines beyond 200 ft. (61 m) require 1/2 in. (13 mm) water lines.*

IMPORTANT! *A backflow prevention device is required on the incoming water connection side. Please see the applicable national, state, and local codes for determining the proper configuration. Water pressure to the unit must not exceed 150 psi (1034 kPa).*

It is always a good practice to have a filter system to improve the quality of the water and to avoid clogging the operating components.

Important! *The water filter (064422-SER) must be thoroughly flushed with water before connecting it to the machine. This removes any loose particles present from the manufacture of the filter that could clog the flow control. To flush the filter, connect the inlet end of the filter to the water supply. Position the outlet end of the filter over an empty pail. Open the water supply. Allow water to flow through the filter until the water exiting the filter is clear. Close the water supply. Attach the outlet end of the filter to the machine. Reopen the water supply.*

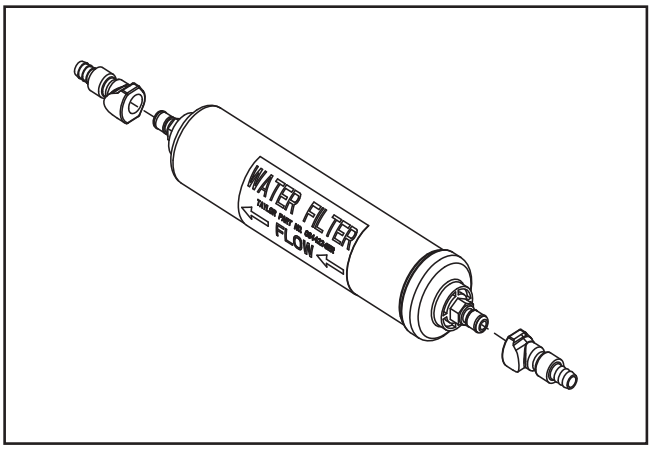

Figure 1-1

Electrical Connections

IMPORTANT! *In the United States, this machine is intended to be installed in accordance with the National Electrical Code (NEC), ANSI/NFPA 701987. The purpose of the NEC code is the practical safeguarding of persons and property from hazards arising from the use of electricity. This code contains provisions considered necessary for safety.*

In all other areas of the world, the machine should be installed in accordance with the existing local codes. Please contact your local authorities if you have any questions.

Each machine requires one power supply for each data label on the machine. Check the data label(s) on the machine for branch circuit overcurrent protection or fuse, circuit ampacity, and other electrical specifications.

See the wiring diagram provided inside the electrical box for proper power connections.

FOLLOW YOUR LOCAL ELECTRICAL CODES.

WARNING! This machine must be properly grounded. Failure to do so can result in severe personal injury from electrical shock.

WARNING! Avoid injury.

- **DO NOT** operate the machine unless it is properly grounded.
- **DO NOT** operate the machine with fuses larger than specified on the machine's data label.
- All repairs should be performed by an authorized Taylor service technician.
- The main power supplies to the machine must be disconnected prior to performing installation, repairs, or maintenance.
- **For Cord-Connected Machines:** Only Taylor service technicians or licensed electricians may install a plug or replacement cord on the machine.
- Machines that are permanently connected to fixed wiring and for which leakage currents may exceed 10 mA, particularly when disconnected or not used for long periods, or during initial installation, shall have protective devices to protect against the leakage of current, such as a GFI, installed by the authorized personnel to local codes.
- Stationary machines that are not equipped with a power cord and a plug or another device to disconnect the appliance from the power source must have an all-pole disconnecting device with a contact gap of at least 0.125 in. (3 mm) in the external installation.
- Supply cords used with this machine shall be oil-resistant, sheathed flexible cable not lighter than ordinary polychloroprene or other equivalent synthetic elastomer-sheathed cord (code designation 60245 IEC 57) installed with the proper cord anchorage to relieve conductors from strain, including twisting, at the terminals and protect the insulation of the conductors from abrasion.
- If the supply cord is damaged, it must be replaced by the manufacturer, service agent, or a similarly qualified person to avoid a hazard.
- Secure supply cord ground lead to machine in a location where if the cord is pulled the main power leads become taut before the ground lead can break loose.

Failure to follow these instructions may result in electrocution. Contact your local authorized Taylor distributor for service.

IMPORTANT! *An equipotential grounding lug is provided with this machine. Some countries require the grounding lug to be properly attached to the rear of the frame by the authorized installer. The installation location is marked by the equipotential bonding symbol (5021 of IEC 60417-1) on both the removable panel and the machine's frame.*

Beater Rotation

NOTICE! Beater rotation must be clockwise as viewed looking into the freezing cylinder.

To correct the rotation on a three-phase machine, interchange any two incoming power supply lines at the freezer main terminal block only. To correct rotation on a single-phase machine, exchange leads inside the beater motor. (Follow the diagram printed on the motor.)

Electrical connections are made directly to the terminal block provided in the main control box located behind the service panel.

It is recommended that beater rotation adjustment be performed by a Taylor service technician.

Initial Freezing Cylinder Cleaning

Due to the types of products used in FCB equipment, it is imperative that the freezing cylinder and the inlet tube be thoroughly brush-cleaned, rinsed, and sanitized before running any product.

Prepare a cleaning solution, using 2 oz. of liquid detergent in 2 gal. of warm water. Using this solution, brush-clean the freezing cylinder and the inlet tube. Rinse the freezing cylinder and the inlet tube with clean water and then sanitize, using the sanitizing procedures outlined in this Operator Manual, starting on page 6-5.

Refrigerant

CAUTION! This machine contains fluorinated greenhouse gases (F-Gas) to provide refrigeration using a hermetically sealed circuit or within foam insulation. This machine's type of gas, quantity, Global Warming Potential (GWP), and CO_2 tonnes equivalent information is recorded on the machine's data label. The refrigerant used is generally considered nontoxic and nonflammable. However any gas under pressure is potentially hazardous and must be handled with caution.

NEVER fill any refrigerant cylinder completely with liquid. Filling the cylinder approximately 80% will allow for normal expansion.

CAUTION! Use only approved refrigerant listed on the machine's data label or authorized through a manufacturer's technical bulletin. The use of any other refrigerant may expose users and operators to unexpected safety hazards.

WARNING! Refrigerant liquid sprayed onto the skin may cause serious damage to tissue. Keep eyes and skin protected. If refrigerant burns should occur, flush the area immediately with cold water. If burns are severe, apply ice packs and contact a physician immediately.

NOTICE! Taylor reminds technicians to be aware of and in compliance with local government laws regarding refrigerant recovery, recycling, and reclaiming systems. For information regarding applicable local laws, please contact your local authorized Taylor distributor.

IMPORTANT! *Refrigerants and their associated lubricants may be extremely moisture absorbent. When opening a refrigeration system, the maximum time the system is open must not exceed 15 minutes. Cap all open tubing to prevent humid air or water from being absorbed by the oil.*

Section 2 To the Operator

The freezer you have purchased has been carefully engineered and manufactured to give you dependable operation.

The Model C300, when properly operated and cared for, will produce a consistent quality product. Like all mechanical products, this machine will require cleaning and scheduled maintenance. A minimum amount of care and attention is necessary if the operating procedures outlined in this manual are followed closely.

IMPORTANT! *This manual should be read before operating or performing any maintenance on the machine.*

Your Taylor machine will ***NOT*** *compensate for and/or correct any errors made during the setup or filling operations. Thus, the initial assembly, setup, and priming procedures are of extreme importance. It is strongly recommended that all personnel responsible for the machine's operation, including assembly and disassembly, go through these procedures together in order to be properly trained and to make sure that all personnel understand their role in using and maintaining the unit.*

In the event you should require technical assistance, please contact your local authorized Taylor distributor.

Note: *Your Taylor warranty is valid only if the parts are authorized Taylor parts, purchased from the local authorized Taylor distributor, and only if all required service work is provided by a Taylor service technician. Taylor reserves the right to deny warranty claims on units or parts if non-Taylor approved parts or incorrect refrigerant were installed in the machine, system modifications were performed beyond factory recommendations, or it is determined that the failure was caused by abuse, misuse, neglect, or failure to follow all operating instructions. For full details of your Taylor warranty, please see the Limited Warranty section in this manual.*

Note: *Constant research results in steady improvements; therefore, information in this manual is subject to change without notice.*

IMPORTANT! *If the crossed-out wheeled-bin symbol is affixed to this* machine*, it signifies that this machine is compliant with the EU Directives as well as other similar end-of-life legislation in effect after August 13, 2005. Therefore, it must be collected separately after its use is completed and cannot be disposed as unsorted municipal waste.*

The user is responsible for returning the machine to the appropriate collection facility, as specified by your local code.

For additional information regarding applicable local disposal laws, please contact the municipal waste facility and/or local authorized Taylor distributor.

Compressor Warranty Disclaimer

The refrigeration compressor(s) on this unit are warranted for the term stated in the Limited Warranty section in this manual. However, due to the Montreal Protocol and the U.S. Clean Air Act Amendments of 1990, many new refrigerants are being tested and developed, thus seeking their way into the service industry. Some of these new refrigerants are being advertised as drop-in replacements for numerous applications. It should be noted that in the event of ordinary service to this unit's refrigeration system, **only the refrigerant specified on the affixed data label should be used.** The unauthorized use of alternate refrigerants will void your Taylor compressor warranty. It is the unit owner's responsibility to make this fact known to any technician he/she employs.

It should also be noted that Taylor does not warrant the refrigerant used in its equipment. For example, if the refrigerant is lost during the course of ordinary service to this machine, Taylor has no obligation to either supply or provide its replacement either at billable or unbillable terms. Taylor does have the obligation to recommend a suitable replacement if the original refrigerant is banned, obsoleted, or no longer available during the 5-year warranty of the compressor.

Taylor will continue to monitor the industry and test new alternates as they are being developed. Should a new alternate prove, through our testing, that it would be accepted as a drop-in replacement, then the above disclaimer would become null and void. To find out the current status of an alternate refrigerant as it relates to your compressor warranty, call the local Taylor distributor or the Taylor factory. Be prepared to provide the model/serial number of the unit in question.

We at Taylor Company are concerned about the safety of the operator when he or she comes in contact with the freezer and its parts. Taylor has gone to extreme efforts to design and manufacture built-in safety features to protect both the operator and service technician. As an example, warning labels have been attached to the freezer to further point out safety precautions.

DANGER! Failure to adhere to the following safety precautions may result in severe personal injury or death. Failure to comply with these warnings may also damage the machine and/or its components. Such damage may require component replacement and service repair expenses**.**

NOTICE! DO NOT operate this machine without reading this entire manual first. Failure to follow all of these operating instructions may result in damage to the machine, poor performance, health hazards, or personal injury.

IMPORTANT! *This machine is to be used only by trained personnel. It is not intended for use, cleaning, or maintenance by children or people with reduced physical, sensory, or mental capabilities or lack of experience and knowledge, unless given supervision or instruction concerning the use of the machine by a person responsible for their safety. Children should be supervised to ensure that they do not play with the machine.*

IMPORTANT! *An equipotential grounding lug is provided with this machine. Some countries require the grounding lug to be properly attached to the rear of the frame by the authorized installer. The installation location is marked by the equipotential bonding symbol (5021 of IEC 60417-1) on both the removable panel and the machine's frame.*

WARNING! This machine must **NOT** be installed in an area where a water jet or hose can be used. **NEVER** use a water jet or hose to rinse or clean the machine. Failure to follow this instruction may result in electrocution.

WARNING! Avoid injury.

- **DO NOT** operate the machine unless it is properly grounded.
- **DO NOT** operate the machine with fuses larger than specified on the machine's data label.
- All repairs should be performed by an authorized Taylor service technician.
- The main power supplies to the machine must be disconnected prior to performing installation, repairs, or maintenance.
- **For Cord-Connected Machines:** Only Taylor service technicians or licensed electricians may install a plug or replacement cord on the machine.
- Machines that are permanently connected to fixed wiring and for which leakage currents may exceed 10 mA, particularly when disconnected or not used for long periods, or during initial installation, shall have protective devices to protect against the leakage of current, such as a GFI, installed by the authorized personnel to local codes.

- Stationary machines that are not equipped with a power cord and a plug or another device to disconnect the appliance from the power source must have an all-pole disconnecting device with a contact gap of at least 0.125 in. (3 mm) in the external installation.
- Supply cords used with this machine shall be oil-resistant, sheathed flexible cable not lighter than ordinary polychloroprene or other equivalent synthetic elastomer-sheathed cord (code designation 60245 IEC 57) installed with the proper cord anchorage to relieve conductors from strain, including twisting, at the terminals and protect the insulation of the conductors from abrasion.
- If the supply cord is damaged, it must be replaced by the manufacturer, service agent, or a similarly qualified person to avoid a hazard.
- Secure supply cord ground lead to machine in a location where if the cord is pulled the main power leads become taut before the ground lead can break loose.

Failure to follow these instructions may result in electrocution. Contact your local authorized Taylor distributor for service.

WARNING! Avoid injury.

- **DO NOT** allow untrained personnel to operate this machine.
- **DO NOT** operate the machine unless all service panels and access doors are restrained with screws.
- **DO NOT** remove any internal operating parts (including, but not limited to, freezer door, beater, or scraper blades), unless all control switches are in the OFF position.

Failure to follow these instructions may result in severe personal injury, especially to fingers or hands, from hazardous moving parts.

WARNING! This machine has many sharp edges that can cause severe injuries.

- **DO NOT** put objects or fingers in the door spout. This may contaminate the product and cause severe personal injury from blade contact.
- **USE EXTREME CAUTION** when removing the beater assembly. The scraper blades are very sharp.

CAUTION! This machine must be placed on a level surface. Extreme care should be taken when moving the for any reason. Two or more persons are required to safely move this machine. Failure to comply may result in personal injury or damage to the machine.

WARNING! Only install this machine in a location where its use and maintenance is restricted to trained personnel. Failure to comply may result in personal injury.

NOTICE! Cleaning and sanitizing schedules are governed by your federal, state, or local regulatory agencies and must be followed accordingly. Please see the cleaning section of this manual for the proper procedure to clean this machine.

WARNING! This machine is pressurized when in operation. The control switch must be in the OFF position until the machine is completely assembled. No part should ever be removed from the machine while it is in operation. No parts should be removed until the control switch has been turned to the OFF position.

- **DO NOT** allow untrained personnel to operate this machine.
- **DO NOT** operate the freezer unless all service panels and access doors are restrained with screws.
- **DO NOT** remove any internal operating parts (example: freezer door, beater, scraper blades, etc.) unless all control switches are in the OFF position.

Failure to follow this instruction may result in severe personal injury from hazardous moving parts or from the impact of propelled parts.

CAUTION! This machine is equipped with a refrigerated cabinet, designed to maintain product temperature at or below 41°F (5°C). Before replenishing the mix supply, the product must be refrigerated at or below 41°F (5°C). Failure to follow this instruction may result in health hazards and poor freezer performance.

DO NOT run this machine without product. Failure to follow this instruction can result in damage to the machine.

DO NOT obstruct air intake and discharge openings. A minimum of 3 in. (76 mm) air clearance on both sides of the machine is required. It is recommended to place the rear of the machine against the wall to prevent the recirculation of warm air. Failure to follow this instruction may cause poor freezer performance and damage to the machine.

For Indoor Use Only: This machine is designed to operate indoors, under normal ambient temperatures of 70°F to 75°F (21°C to 24°C). The machine has successfully performed in high ambient temperatures of up to 104°F (40°C) at reduced capacities.

Noise Level: Airborne noise emission does not exceed 78 dB(A) when measured at a distance of 39 in. (1.0 m) from the surface of the machine and at a height of 62 in. (1.6 m) from the floor.

Notes:

Exploded View

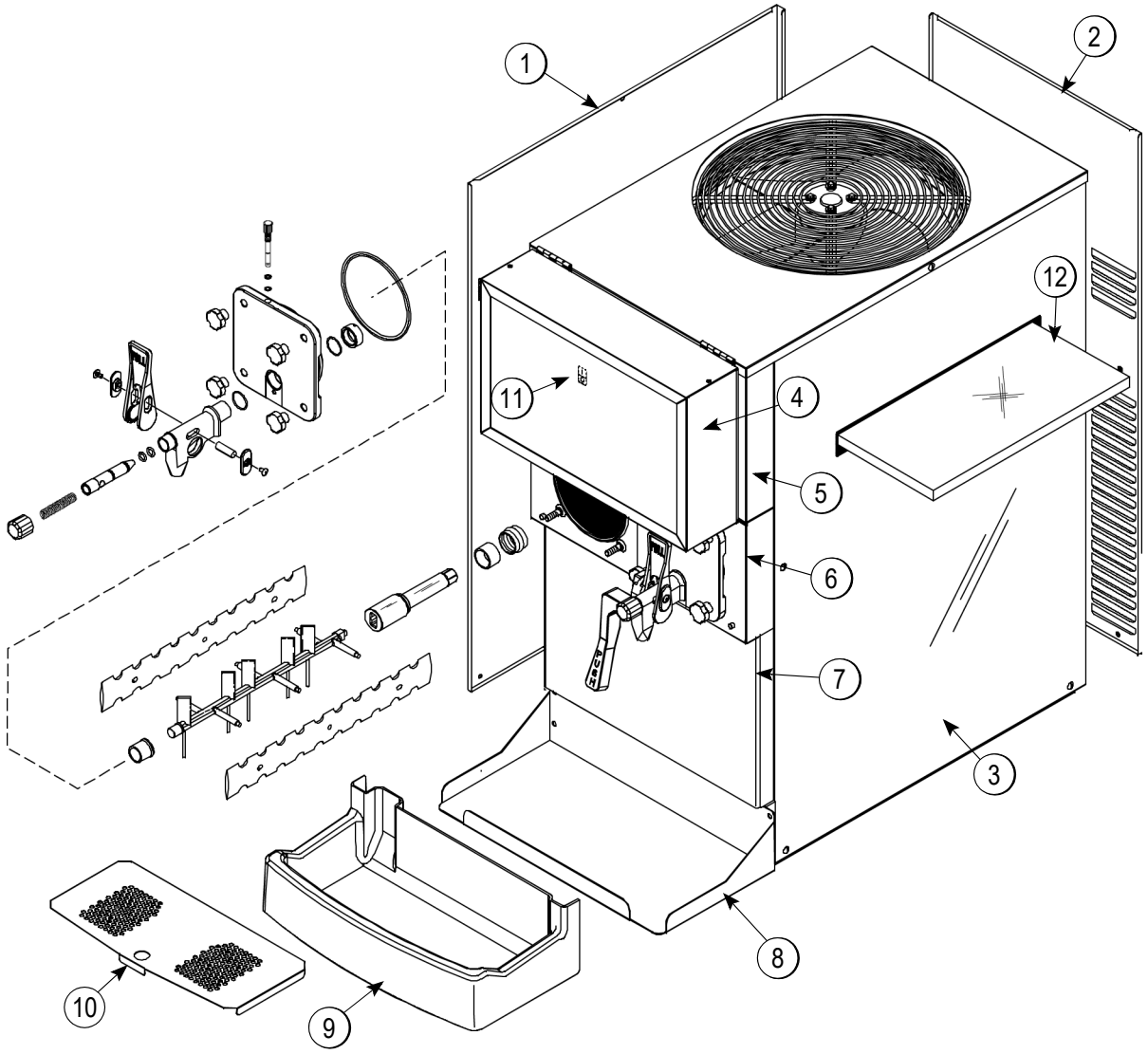

Figure 4-1

Item	Description	Part No.
1	Panel-Side-Left	X54676- SER
2	Panel-Rear	054672
3	Panel-Side-Right	054671
4	Display-Lighted	069143
5	Panel-Front-Upper	069142
6	Panel-Front-Shell	054668

Item	Description	Part No.
7	Panel-Front-Lower	054670
8	Shelf-Drip Tray	057938
9	Tray-Drip	057738
10	Shield-Splash	057939
11	Switch-Rocker-OFF-ON	078418
12	Filter- Air- 15.88LX15.88H	052779- 5

Beater Door Assembly

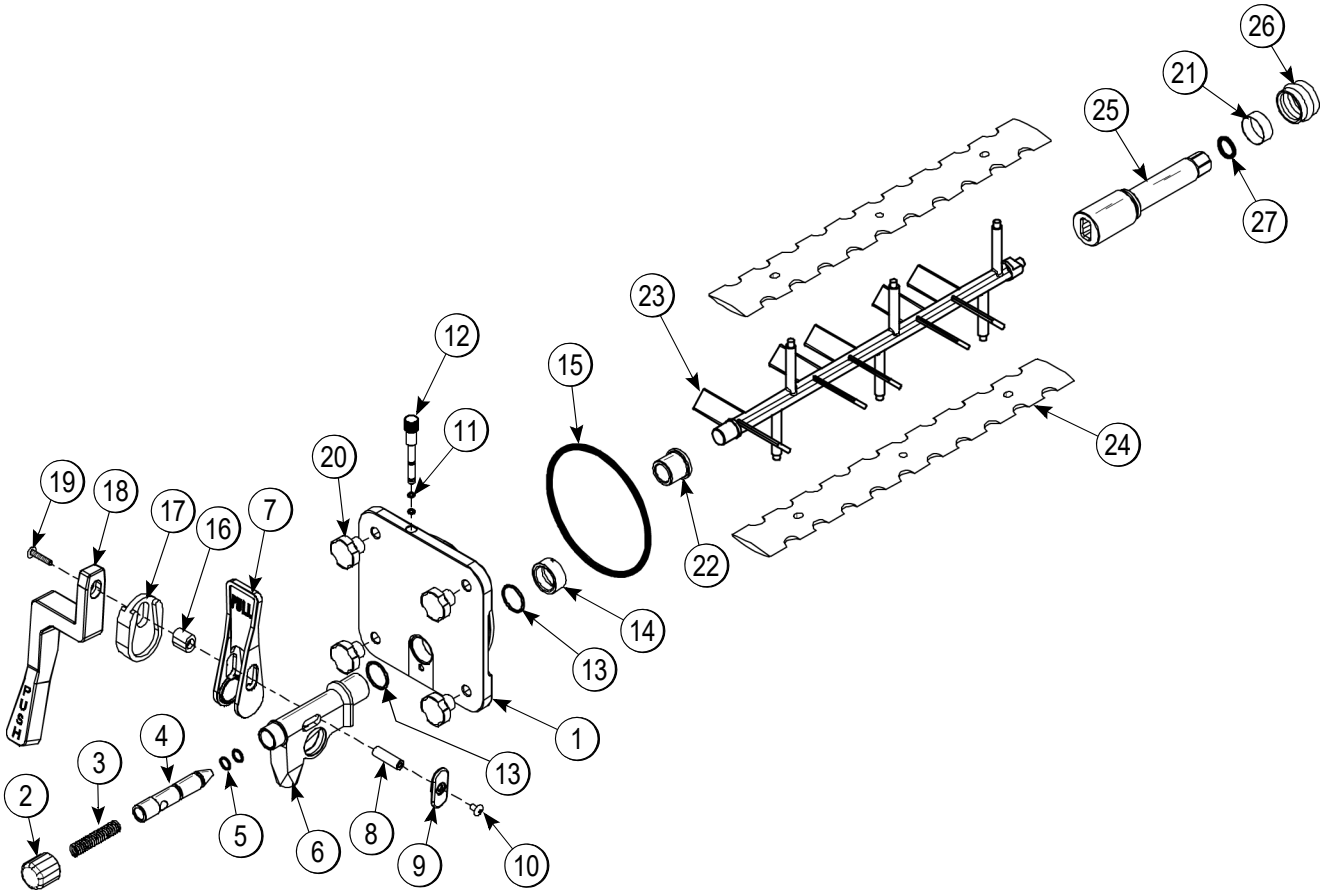

Figure 4-2

Item	Description	Part No.
1	Door A.- Freezer- Slush	X80599
2	Cap- Spout- Door- FCB- BLK	046191- BLA
3	Spring- Comp.480X.072X3.0	039320
4	Valve- Draw- Door- Slush	039324
5	O-ring- 9/16 OD X .103W (25 to Bag)	016369
6	Spout- Door- FCB- Black	046190- BLA
7	Handle- Draw- FCB- Black	046192- BLA
8	Pin- Pivot- Spout- Door	039321
9	Slide- Handle- Door- FCB	046193- BLA
10	Screw- 10- 32X3/8 Phil	053869
11	O-ring- 9/32 OD X 1/16 Wall (25 to Bag)	029751
12	Plug- Prime- Slush	039568
13	O-ring- 1.129 ODX.989ID X.070W (25 to Bag)	039219
14	Nut- Spout- Door- Slush	039323

Item	Description	Part No.
15	O-ring- 5- 1/4O.D. X .210W (25 to Bag)	017003
16	Pin- Handle- ADA- FCB	068601
17	Adaptor- Mounting- ADA	068579
18	Handle- ADA- FCB	068580
19	Screw- 10/32X1” Phil Truss	069069
20	Nut- Stud	043666
21	Bushing- Beater Shaft/Boot Seal	042278
22	Bearing- Front- Slush	039349
23	Beater- Plastic- FCB	041182
24	Blade- Scraper- FCB 16L	041103
25	Shaft- Beater- Slush	083418
26	Seal- Drive Shaft	032560
27	O-ring- 7/8 OD X .139W (25 to Bag)	025307

Accessories

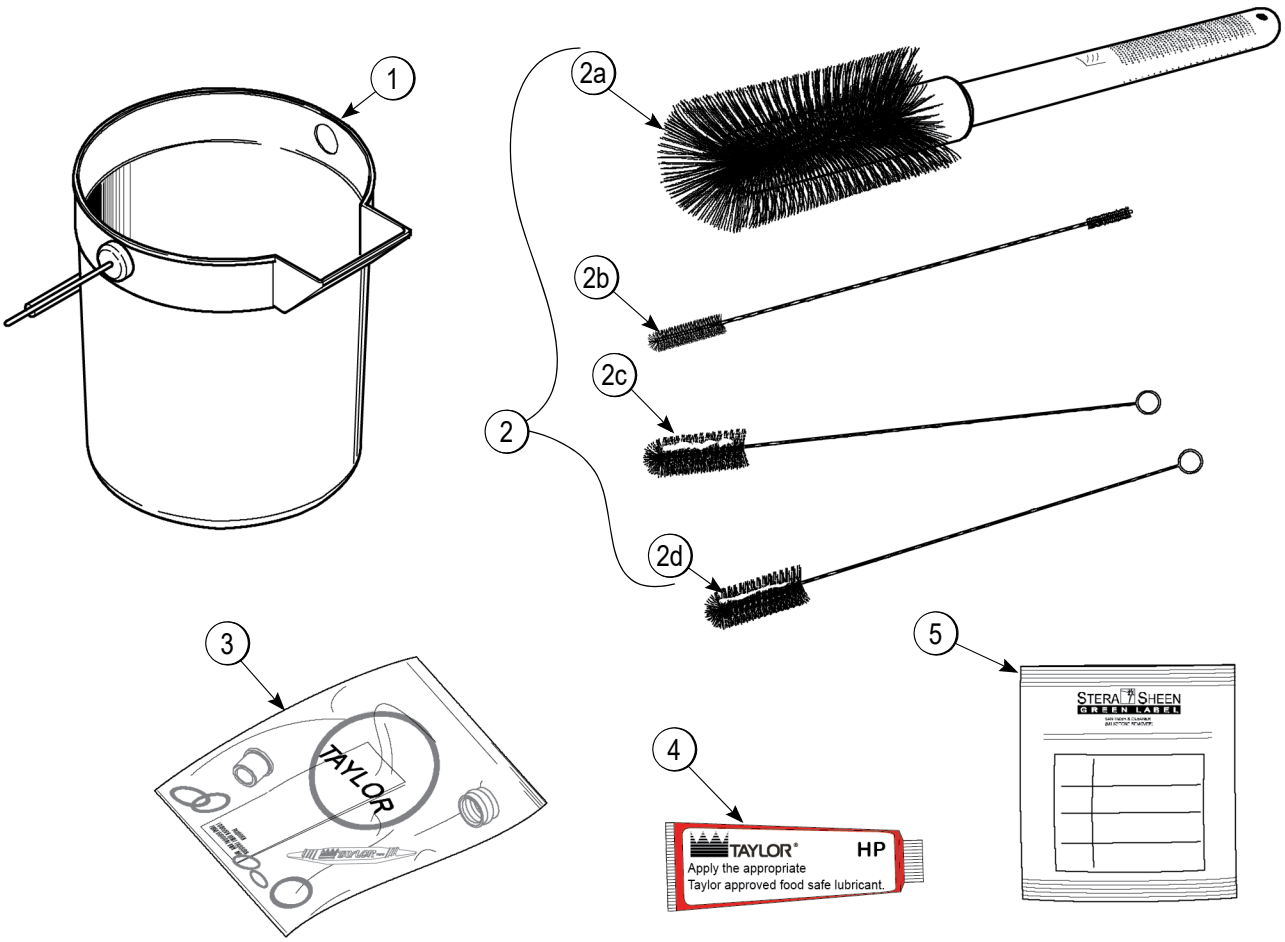

Figure 4-3

Item	Description	Part No.
1	Pail-10 QT.	013163
2	Brush A.- Package	X64275
2a	Brush-Mix Pump Body-3”x7”	023316
2b	Brush-Double Ended	013072
2c	Brush-Rear BRG 1”Dx2“L	013071

Item	Description	Part No.
2d	Brush-Draw Valve 1-1/2”OD	014753
3	Kit A.-Tune Up	X39699
4	Lubricant-Taylor Hi Perf	048232
*5	Sanitizer-Stera Sheen	See Note

***Note:** A sample container of sanitizer is sent with the unit. For reorders, Order Stera Sheen part no. 055492 (100 2 oz. packs) or Kay- 5 part no. 041082 (200 packs).

Notes:

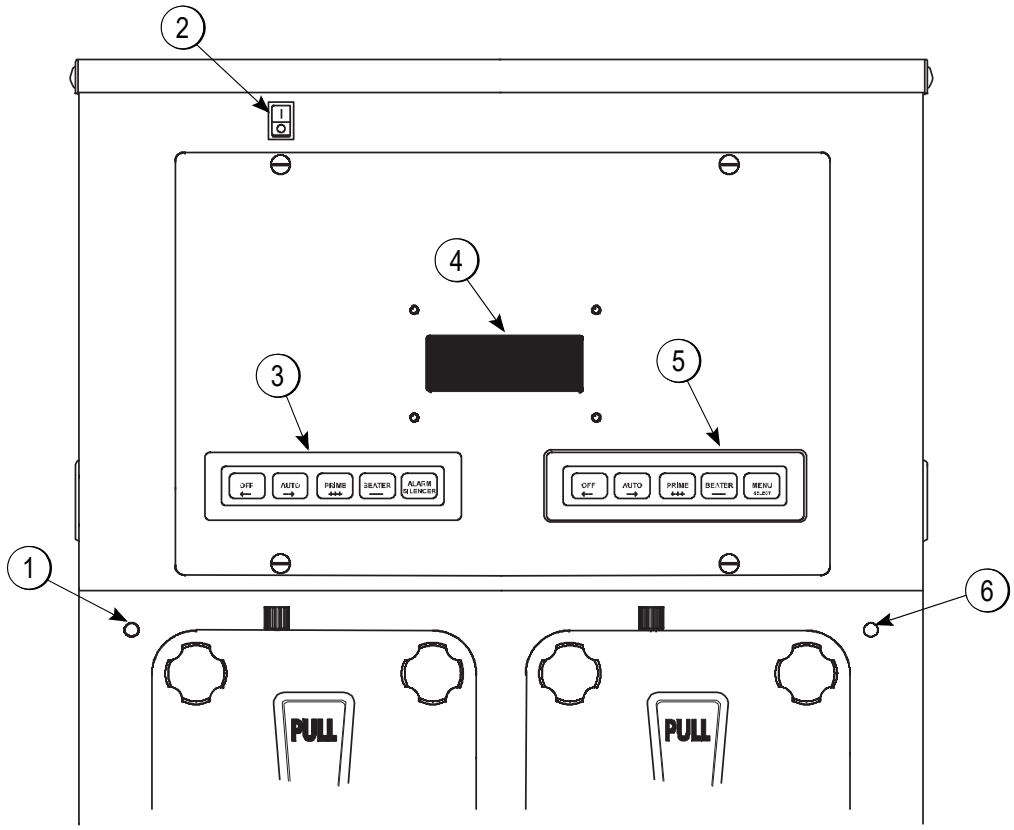

Figure 5-1

Item	Description
1	Product Light—Left Side
2	Control Switch
3	Keypad—Left Side
4	Liquid Crystal Display
5	Keypad—Right Side
6	Product Light—Right Side

Control Switch

The control switch is located at the top left corner of the control channel. When placed in the ON position, allows SLUSHTECH operation.

Liquid Crystal Display

The Liquid Crystal Display (LCD) is located on the front control panel. The LCD is used to show the current operating mode of the freezing cylinders. The LCD also indicates whether there is enough syrup, CO_2, and water being supplied to the freezer. If an error in the machine operation occurs, a warning tone will sound and the word **FAULT** will flash on the third line of the display.

Operational Mode Display

The following displays illustrate the Operational Mode Displays. This information appears on the LCD during normal operation.

When the machine is plugged into the wall receptacle and the control switch is in the ON position, this screen appears.

SAFETY TIMEOUT
ANY KEY ABORT

This display will remain on the LCD for 60 seconds unless a key is pressed. If any key is pressed (or 60 seconds pass), then the next screen appears.

OFF	MODE	OFF
OK	SYRUP	OK
CO2-OK		WATER-OK

Note: *Syrup, CO_2, and water are satisfied.*

Pressing the AUTO (- ->) keys on both sides of the machine will display this screen.

AUTO	MODE	AUTO
OK	SYRUP	OK
CO2-OK		WATER-OK

Line 1 indicates the operating mode for each freezing cylinder.

Line 2 indicates the status of the syrup systems in each freezing cylinder. As long as syrup is available, the word OK will appear on the LCD. When the syrup supply is insufficient, the word OUT will flash on the LCD. The same rules apply to the fourth line, which indicates the status of the CO_2 and the H_2O.

The third line of this display is a fault indicator. If an error in machine operation occurs, the word FAULT will be displayed on the LCD.

BEATER OUT	MODE	BEATER OUT
- -FAULT- -	SYRUP	- -FAULT- -
CO2-OUT		H2O-OUT

Operator Menu Display

The **OPERATOR MENU** is used to enter into the operating screens. To access the OPERATOR MENU, simply press the MENU (SEL) key. The cursor will flash under the letter A, indicating that this is screen A. To select a different screen, use the AUTO (- ->) and OFF (<- -) keys to move the cursor to the desired screen selection and press the MENU (SEL) key.

```
OPERATOR MENU
A B C D E F G H I
EXIT MENU
<- -  - ->          SEL
```

Operator Menu Timeout

If the display is left in the operator menu or any of the operator menu selections, except for Current Conditions, the display will return to the system mode screen 60 sec. after the last key press. The Current Conditions screen will be displayed until manually changed.

Finding Current Fault Conditions

Screen B—FAULT DESCRIPTION

The fault description will indicate if there is a fault in one of the freezing cylinders. When the actual fault is corrected, the warning tone will stop. Only BRL NOT COOLING shown in table 5-1 requires pressing the OFF (<- -) key to clear the fault message and the warning tone.

Table 5-1

Fault Messages	
No Fault Found	No fault conditions are apparent.
Beater Overload	Beater is out on overload.
Chk Refrig Sys Psi	Compressor is out on high head pressure.
Thermistor Short	Shorted thermistor probe.
Thermistor Open	Open thermistor probe.
Syrup Pressure Low	Syrup is no longer present.
CO2 Pressure Low	CO_2 pressure is low.
H2O Pressure Low	Water pressure is low.
BRL Not Cooling	Freezing cylinder is not cooling after 5 minutes.
BRL Temp 2 High	Freezing cylinder temperature is above 120°F (49°C).

The following are explanations of the possible faults and the display screens. Fault messages 2 and 3 indicate the faults found in freezing cylinders 1 and 2 respectively.

NO FAULT FOUND—No fault conditions are apparent.

BEATER OVERLOAD—Beater motor is out on overload. When this fault occurs, the machine automatically turns off. The fault clears when the condition is corrected.

CHK REFRIG SYS PSI—Compressor is out on high head pressure. When this fault occurs, the machine automatically turns off. The fault clears when the condition is corrected.

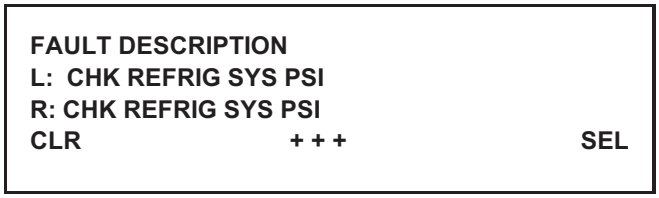

THERMISTOR SHORT—One or both of the barrel (freezing cylinder) thermistor probes are faulty.

THERMISTOR OPEN—One or both of the barrel (freezing cylinder) thermistor probes are faulty.

SYRUP PRESS LOW—When the syrup out indicator displays a lack of syrup, the unit will enter a Hold mode. At this time, no refrigeration or product flow from the flow control will be allowed. Only the beater will operate. When the syrup is satisfied, the unit will refill the product tank, and then automatically return to the Auto mode. The fault message and the warning tone will clear.

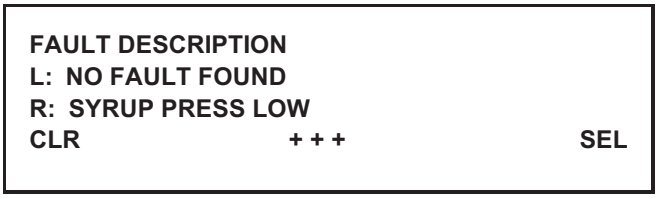

CO_2 PRESSURE LOW—When the CO_2 out indicator displays a lack of CO_2, a 60-second internal timer will start. If the CO_2 is not replenished at the end of the 60 seconds, both freezing cylinders will shut down, and this fault message will appear. Replenish the CO_2 , and the fault message and warning tone will clear.

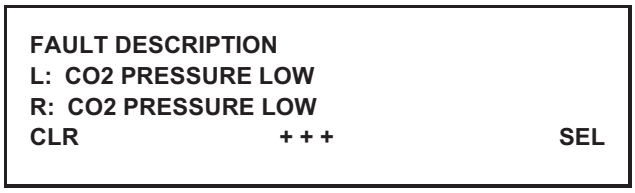

H_2O PRESSURE LOW—When the water out indicator displays a lack of water, a 60-second internal timer will start. If the water is not replenished at the end of the 60 seconds, all freezing cylinders will shut down, and this fault message will appear. Replenish the water, and the fault message and warning tone will clear.

BRL NOT COOLING—A freezing cylinder check has been established for the Auto mode of operation. If a freezing cylinder enters the Auto mode, the control will check product temperature. After 5 minutes, it will again check product temperature. If product temperature does not drop in that 5-minute time span, the freezing cylinder will shut down and this message will appear on the fault screen. For this check to be valid, the product temperature must be above 40°F (4.4°C).

```
FAULT DESCRIPTION
L:  BARREL NOT COOLING
R:  NO FAULT FOUND
CLR              + + +              SEL
```

BRL TEMP 2 HIGH—A maximum allowable product temperature has been established to prevent product from excessive heating. If the product exceeds 120°F (49°C) for any reason (in any mode of operation), the entire machine shuts down.

```
FAULT DESCRIPTION
L:  BARREL TEMP 2 HIGH
R:  NO FAULT FOUND
CLR              + + +              SEL
```

Faults, when corrected, are cleared from the FAULT DESCRIPTION screen, with the following exception: BRL NOT COOLING. This fault requires the operator to press the OFF (<- -) key (when in the FAULT DESCRIPTION screen) in order for the fault to discontinue.

To see if there is more than one fault in either freezing cylinder, press the PRIME (+ + +) key. To return to the operator menu, press the MENU (SEL) key once. To return to the Main Screen, use the AUTO (- ->) key to cycle to menu item A, then press the MENU (SEL) key.

Screen C—SET CLOCK

Use the AUTO (- ->) and OFF (<- -) keys to place the cursor under the element to be set (hours, minutes, month, day, or year). Use the PRIME (+++) and BEATER (- - -) keys to increment or decrement the value. Press the MENU (SEL) key to advance to the DAYLIGHT SAVING TIME screen.

Note: *The clock is programmed with military time.*

```
SET CLOCK
14:30                                10/25/06

<- - -> + + +      - - -      SEL
```

This screen will appear if an invalid date is entered (example: if the date entered exceeds the days of that month).

```
SET CLOCK
14:30                                02/31/07
                INVALID DATE
                                     SEL
```

This screen allows the Daylight Saving Time options. If the Daylight Saving Time option is enabled, then the time will be advanced by one hour at 2:00 a.m. on the first Sunday in April, and will be retarded by one hour at 2:00 a.m. on the last Sunday in October.

```
DAYLIGHT SAVING TIME
ENABLE          DISABLE

<- - ->                              SEL
```

Screen D—MANUAL DEFROST

This screen allows the operator to **manually defrost** the left or right side of the machine.
Place the cursor under YES, press the MENU (SEL) key, and the command will be executed.

```
MANUAL DEFROST
LEFT SIDE                        YES   NO

<- - ->                              SEL
```

Repeat the procedure for the right side of the machine.

```
MANUAL DEFROST
RIGHT SIDE                    YES   NO

<- - ->                            SEL
```

Note: *Only one side of the machine may be placed in the Defrost mode at a given time. Attempting to place a side of the machine into Defrost mode while the other side is defrosting, will result in the following screen:*

```
ALREADY IN DEFROST
```

Press the MENU (SEL) key to return the machine to the OPERATOR menu.

Screen E—SYSTEM INFORMATION

It consists of six display features.

The first feature indicates the software version.

```
SYSTEM INFORMATION
C300 CONTROL UVC2
VERSION 1.03
                                   SEL
```

The second feature indicates the bill of material number and the serial number. It also indicates if the machine is equipped with a water pressure switch.

```
B.O.M. C30027C000
S/N K0000000
WITH H20 PRESS SW
                                   SEL
```

The third feature indicates the version number of the language and text.

```
SYSTEM INFORMATION
LANGUAGE
VERSION 1.09          ENGLISH 446
                                   SEL
```

The fourth feature will display the POWER SAVER MODE, with a status of OFF, REST, or STANDBY.

If the POWER SAVER MODE is OFF, the following screen will be displayed.

```
POWER SAVER MODE
      OFF

                                   SEL
```

If a Power Saver mode is programmed, one of the following screens will appear.

```
POWER SAVER REST
CYCLE 1          SUN              01:00
                 SUN              08:30
               + + +      - - -    SEL
```

```
POWER SAVER STANDBY
CYCLE 1          SUN              01:00
                 SUN              08:30
               + + +      - - -    SEL
```

The fifth feature will indicate the left side defrost time and which day(s) the defrost will occur.

```
DEFROST TIME LEFT
CYCLE 1          ALL              09:00

               + + +      - - -    SEL
```

```
DEFROST TIME LEFT
CYCLE 1          SUN              09:00

<- - ->        + + +    - - -    SEL
```

The sixth feature will indicate the right side defrost time and which day(s) the defrost will occur.

```
DEFROST TIME RIGHT
CYCLE 1          ALL              10:00

               + + +      - - -    SEL
```

```
DEFROST TIME RIGHT
CYCLE 1          SUN                    10:00

<- - ->          + + +    - - -    SEL
```

Press the MENU (SEL) key to return to the operator menu.

Screen F—CURRENT CONDITIONS

This screen displays the current viscosity, product temperature, and pressure for each freezing cylinder. An asterisk will indicate which side is refrigerating. Press the MENU (SEL) key to return to the operator menu.

Note: *Viscosity is checked only when product temperature is below 40°F (4.4°C).*

```
CURRENT CONDITIONS
L*1200Hd          27.3F
R*1200Hd          27.3F
                                    SEL
```

5

Screen G—FAULT HISTORY

This option provides a record of the last 20 faults. The display also indicates the date and time each fault occurs.

```
FAULT HISTORY                          1
10/25/06                           08:34
NO FAULT FOUND
<- - -> + + +    - - -        SEL
```

Press the AUTO (- ->) and OFF (<- -) keys to increase or decrease the fault page.

Page numbers are located in the upper right-hand corner of the display. The most recently recorded fault will appear on page 1. The fault description is listed on the third line of the fault page.

```
FAULT HISTORY                          2
10/25/06
R SYRUP PRESS LOW                  08:33
<- - -> + + +    - - -        SEL
```

Press the AUTO (- ->) key to move to the next screen. The next screen will indicate when the fault was satisfied.

```
FAULT HISTORY                          2
10/25/06                          14:06:19
RESTORED FROM FAULT
PAGE 2          + + +        - - -    SEL
```

Press the MENU (SEL) key to return to the operator menu.

Screen H—RINSE/SANITIZE

This screen allows the operator to rinse or sanitize the freezing cylinder(s).

```
                RINSE / SANITIZE
RINSE                SANITIZE          EXIT
                                        - - -
<- - -->                               SEL
```

Use the AUTO (- ->) and OFF (<- -) keys to select either RINSE or SANITIZE, and then press the MENU (SEL) key.

```
                    SANITIZE
LEFT    SIDE                  YES      NO
                                        - - -
<- - -->                      SEL
```

Use the cursor keys to select YES or NO, then press the MENU (SEL) key.

```
                    SANITIZE
RIGHT   SIDE                  YES      NO
                                        - - -
<- - -->                      SEL
```

Repeat for the right side of the machine.

Screen I—SERVICE MENU

This screen allows the service technician to access service information. Press the MENU (SEL) key to return to the OPERATOR MENU.

```
                OPERATOR MENU
                A B C D E F G H I
SERVICE MENU
<- - - ->                          SEL
```

Syrup Out Indicator

```
AUTO            MODE            AUTO
OUT             SYRUP           OK

CO2-OK                          WATER-OK
```

If the word OUT appears in one of the columns next to the word SYRUP, it indicates a lack of syrup or syrup pressure being supplied for the indicated freezing cylinder. If the machine is in the Auto or Prime modes, the product light will illuminate and a warning tone will sound for that freezing cylinder. At this time, replace the appropriate bag-in-the-box. As a safety feature, the refrigeration system automatically stops to prevent a freeze-up in the freezing cylinder.

If a syrup out condition occurs on one side, that side will enter the Hold mode at which time refrigeration remains off, the beater continues to run, and the CO_2 solenoid is closed for that side to prevent the dispensing of product. The opposite side will not be affected.

CO_2 Out Indicator

```
AUTO            MODE            AUTO
OK              SYRUP           OK

CO2-OUT                         WATER-OK
```

On the LCD, if the word OUT appears next to CO_2, it indicates a lack of CO_2 being supplied to the freezer. The product light will also illuminate, and a warning tone will sound. This will continue until the CO_2 is replaced. If the CO_2 is not replaced within 1-minute, the machine will shut down and a fault message will appear.

Water Out Indicator

```
AUTO            MODE            AUTO
OK              SYRUP           OK

CO2-OK                          WATER-OUT
```

On the LCD, if the word OUT appears next to the word WATER, it indicates a lack of water being supplied to the freezer. In addition, the product light will illuminate, and a warning tone will sound. This will continue until the proper amount of water is supplied to the freezer. If the water is not supplied within 1-minute, the machine will shut down and a fault message will appear.

Audio Alarm Silencer

The audio alarm will be disabled if the ALARM SILENCE key is pressed. If a new fault or fault condition occurs or the system mode changes, the audio alarm will be re-enabled automatically. If the audio alarm is silenced for greater than 30-minutes without correcting the fault, it will be re-enabled automatically.

Product Light

When the light is continuously lit (not flashing) it indicates that there is an OUT condition for syrup, water, or CO_2.

When the light is flashing, it indicates that the product is not at serving viscosity. This will occur during the initial freeze down, a defrost cycle, a FAULT condition, and power saver modes.

Sampling Valve

The sampling valve is located behind the lower front panel. The sampling valve is used to obtain a brix reading.

Daily Procedures

The following procedure should be performed **daily**.

Remove the splash shield and front drip tray. Take these parts to the sink and brush-clean them. Re-install the parts onto the freezer. Use a clean, sanitized towel and wipe down the front of the machine, including the doors and spouts.

Notes:

The Model C300 contains two 7 qt. (6.6 L) freezing cylinders.

WARNING! This machine is pressurized when in operation. The control switch must be in the OFF position until the machine is completely assembled. No part should ever be removed from the machine while it is in operation. No parts should be removed until the control switch has been turned to the OFF position.

- **DO NOT** allow untrained personnel to operate this machine.
- **DO NOT** operate the freezer unless all service panels and access doors are restrained with screws.
- **DO NOT** remove any internal operating parts (example: freezer door, beater, scraper blades, etc.) unless all control switches are in the OFF position.

Failure to follow this instruction may result in severe personal injury from hazardous moving parts or from the impact of propelled parts.

The syrup flow control combines the two ingredients of water and syrup and sends this combination to the freezing cylinder. As product is drawn, new product will flow from the flow control into the freezing cylinder. CO_2 is supplied after the flow control to carbonate the product and aid in dispensing.

We begin our instructions at the point when the parts are disassembled and laid out to air-dry.

The following procedures will show you how to assemble the parts into the freezer, sanitize them, and prime the freezer with fresh product.

Duplicate the following procedures, where they apply, for the other freezing cylinder.

If you are disassembling the machine for the first time or need information to get to this starting point in our instructions, turn to “Disassembly” on page 6-11, and start there.

Assembly

WARNING! Make sure the control switch is in the OFF position to eliminate the chance of moving parts. Failure to follow this instruction may result in severe personal injury from hazardous moving parts.

Note: *When lubricating parts, use an approved food-grade lubricant (example: Taylor Lube HP).*

1. Lubricate the O-ring groove. Slide the O-ring into the groove on the driveshaft. Lubricate the driveshaft seal groove, the O-ring, and the shaft portion that comes in contact with the bearing on the beater driveshaft. **Do not** lubricate the hex end of the driveshaft.

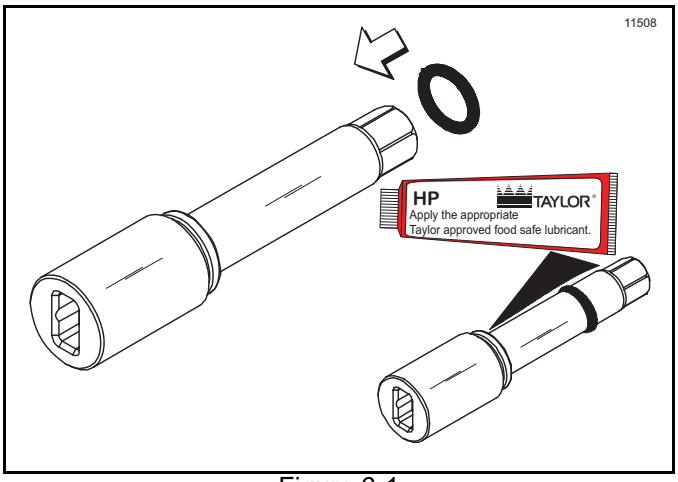

Figure 6-1

2. Lubricate the inside diameter of the driveshaft seal. Install the driveshaft seal bushing in the driveshaft seal.

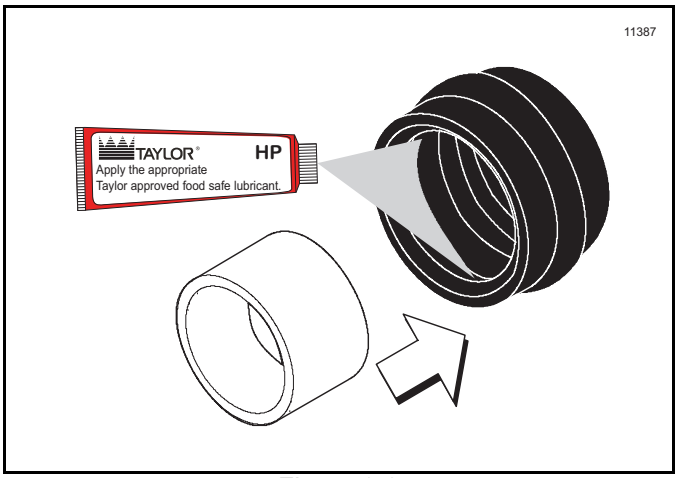

Figure 6-2

Note: *The driveshaft bushing must be positioned in the center of the driveshaft seal.*

3. Slide the seal and bushing over the shaft and groove until it snaps into place. Fill the inside portion of the seal with more lubricant and evenly lubricate the end of the seal that fits onto the rear shell bearing.

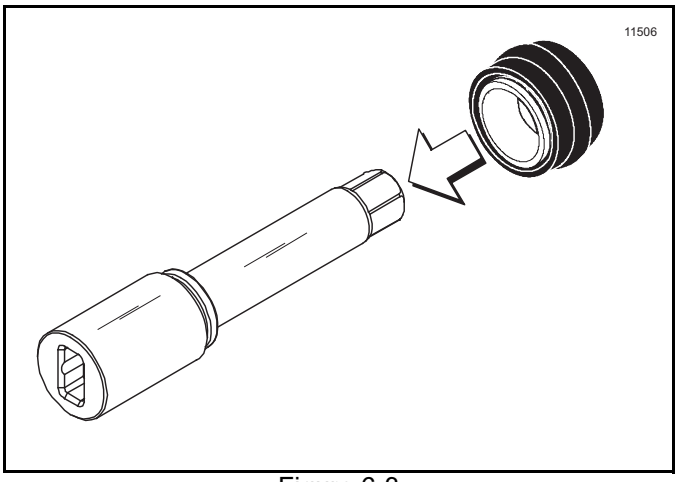

Figure 6-3

4. Insert the beater driveshaft into the freezing cylinder, hex end first, and into the rear shell bearing until the seal fits securely over the rear shell bearing. Make sure the driveshaft fits into the drive coupling without binding. Remove any excess lubricant from the seal.

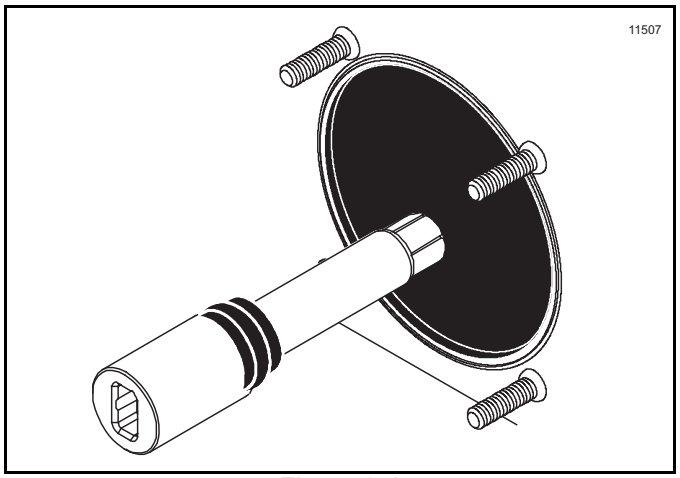

Figure 6-4

5. Install the beater assembly. First check the scraper blades for any nicks or signs of wear. If any nicks are present or if the blade is worn, replace both blades. If the blades are in good condition, place the scraper blades over the holding pins on the beater.

Note: *Each hole on the scraper blade must fit securely over each pin.*

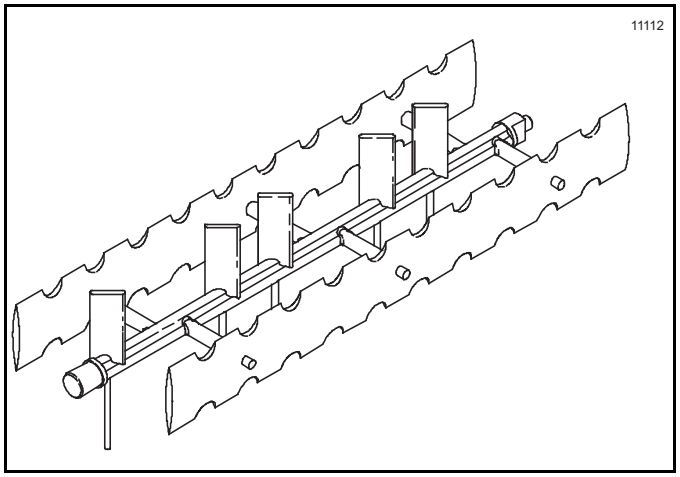

Figure 6-5

6. Align the flats on the end of the beater assembly with the driveshaft. Make sure the beater assembly locating pin is in position in the locating hole of the driveshaft. Turn the beater slightly to make sure that the beater is properly seated. When in position, the beater will be approximately 3/8 in. inside the front of the freezing cylinder.

Important! *Ensure the beater is properly seated. Failure to properly seat the beater may cause damage to the beater and the door.*

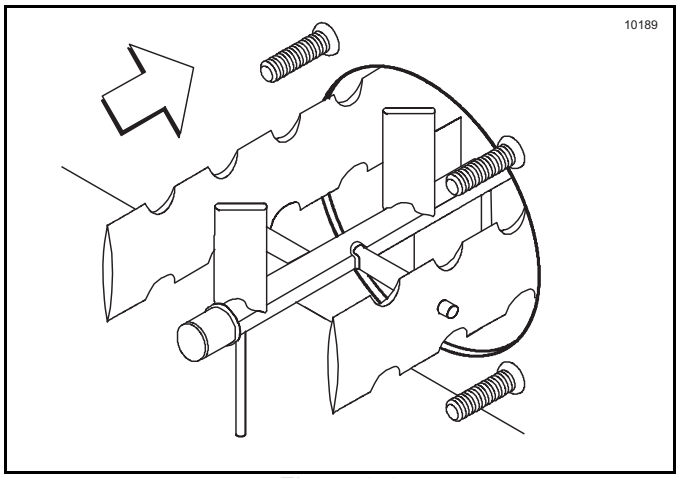

Figure 6-6

Note: *The scraper blades on the beater assembly should be in the 6 and 12 o'clock positions. This will enable freezer door installation.*

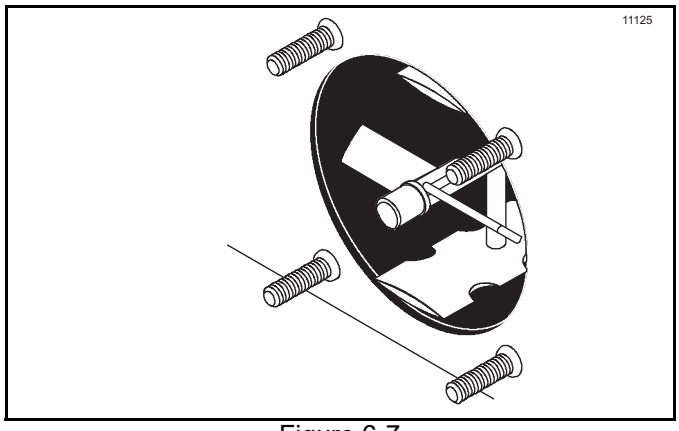

Figure 6-7

7. Before installing the draw valve, slide the two O-rings into the grooves on the draw valve. Lubricate the O-rings and the valve as illustrated below.

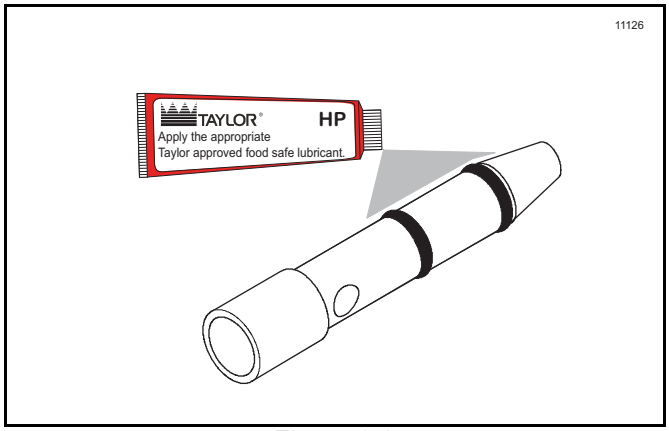

Figure 6-8

8. Insert the draw valve into the freezer door spout from the front of the machine. The valve is properly installed when the hole in the draw valve is visible in the slot of the freezer door spout.

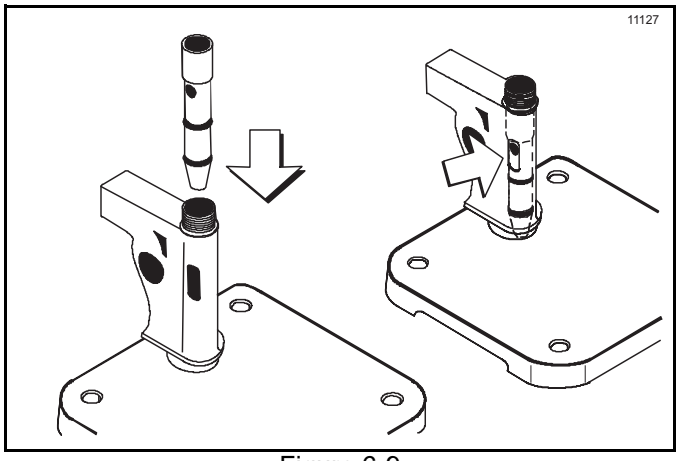

Figure 6-9

9. Snap the draw valve handle onto the door spout. Align the hole in the draw valve with the slot in the draw handle.

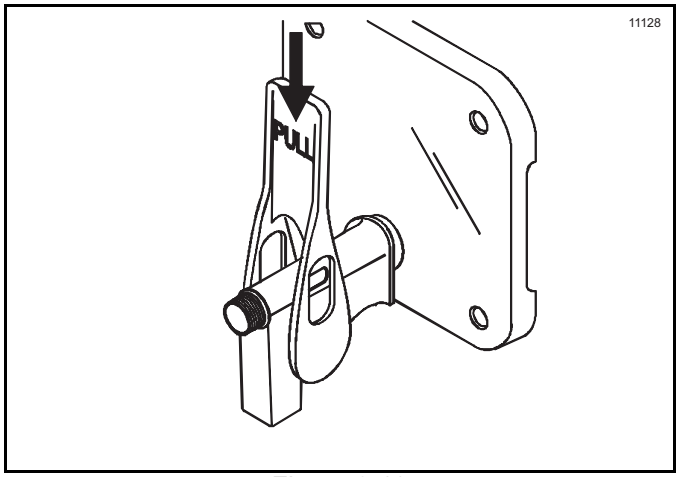

Figure 6-10

6

10. Slide the pivot pin through the draw handle and into the draw valve. Place the draw handle slide over the opening in the draw handle and the pivot pin. Secure the assembly with the screw.

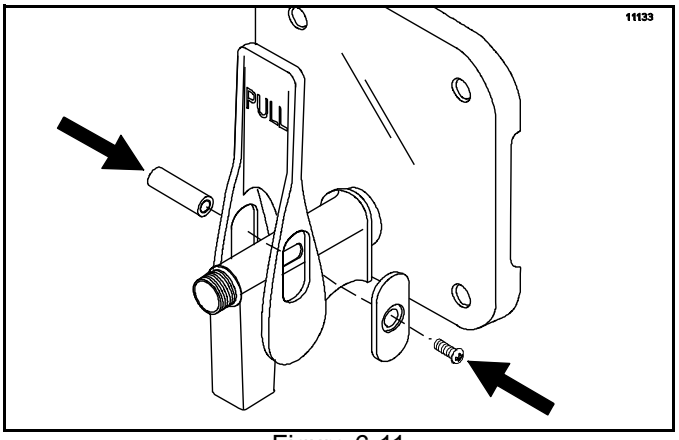

Figure 6-11

11. Install the handle pin through the mounting adaptor and into the ADA handle. Mount the assembled ADA handle onto the pivot pin.

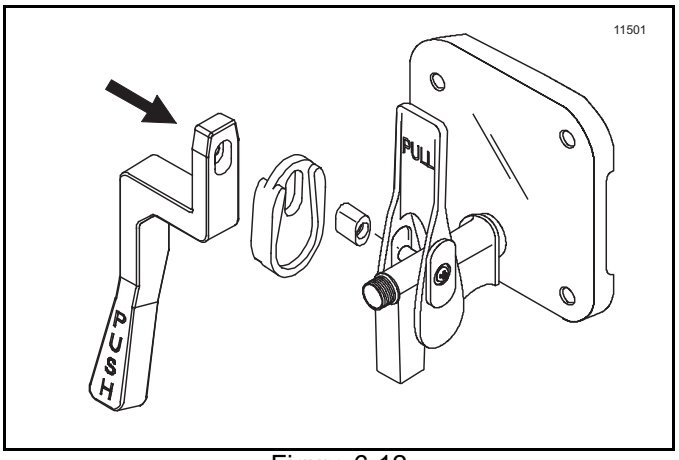

Figure 6-12

12. Secure the assembly with the screw.

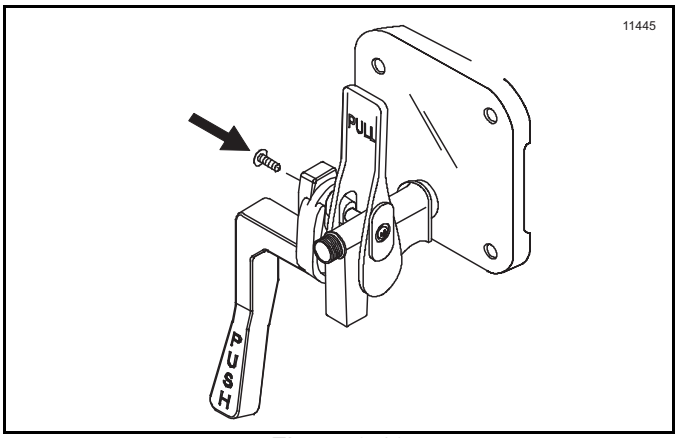

Figure 6-13

13. Insert the spring into the front of the door spout.

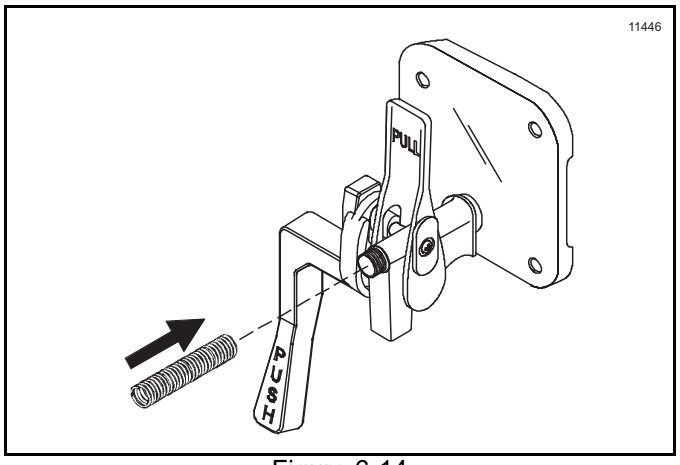

Figure 6-14

14. Place the threaded cap on the end of the draw valve cavity. Turn the cap clockwise until it is secure.

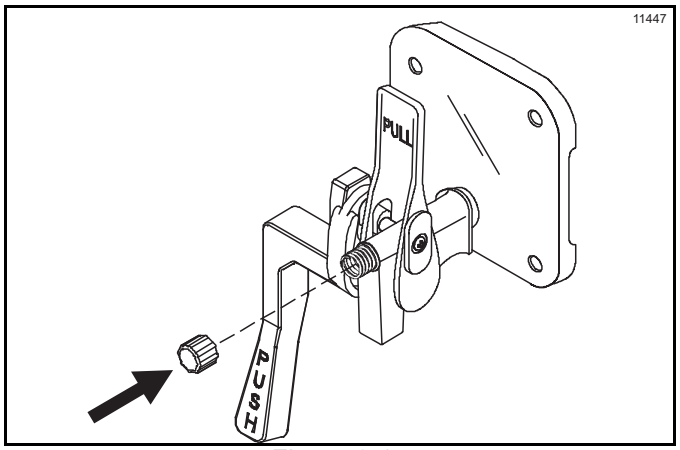

Figure 6-15

15. Place the two O-rings on the prime plug and lightly lubricate.

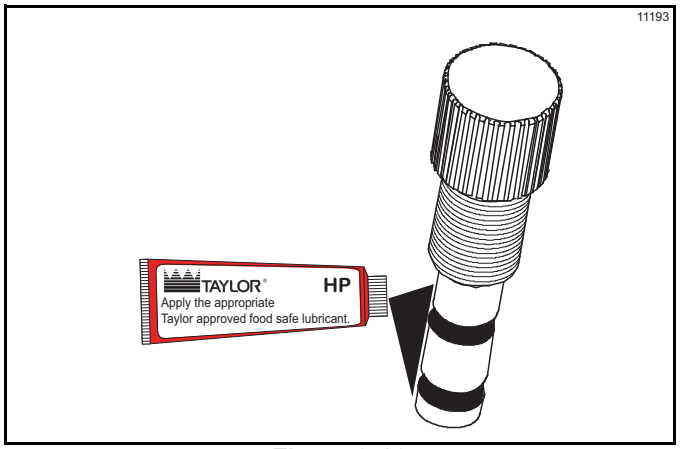

Figure 6-16

16. Install the prime plug.

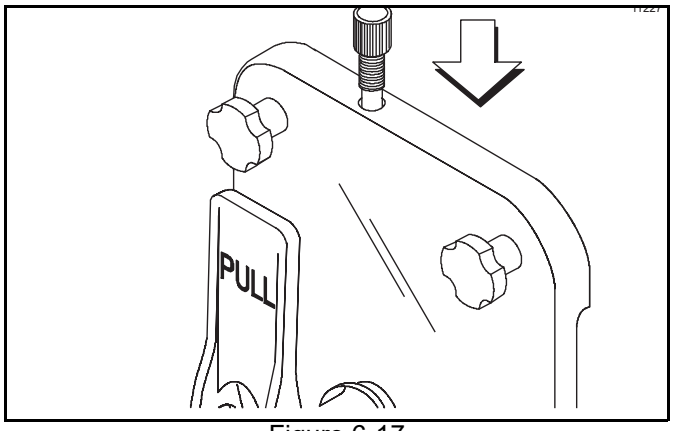

Figure 6-17

17. Place the large O-ring into the door groove and lightly lubricate.

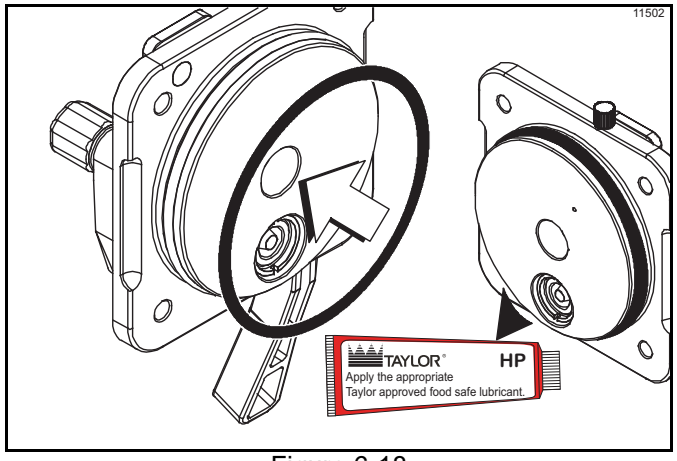

Figure 6-18

Note: *Every four months or less, discard the O-rings and install new O-rings.*

18. Install the front bearing. **Do not** lubricate the front bearing.

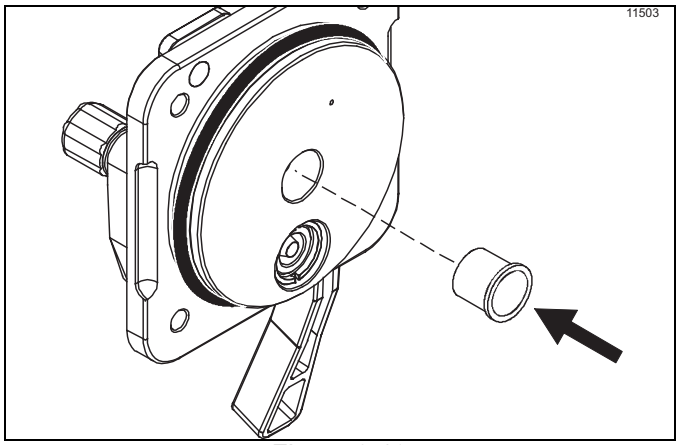

Figure 6-19

19. nstall the freezer door. Position the door on the four studs on the front of the freezing cylinder. Firmly push the door into place. Install the four handscrews on the studs and finger-tighten them equally in a crisscross pattern to ensure that the door is secure.

Important! *Do not overtighten the handscrews.*

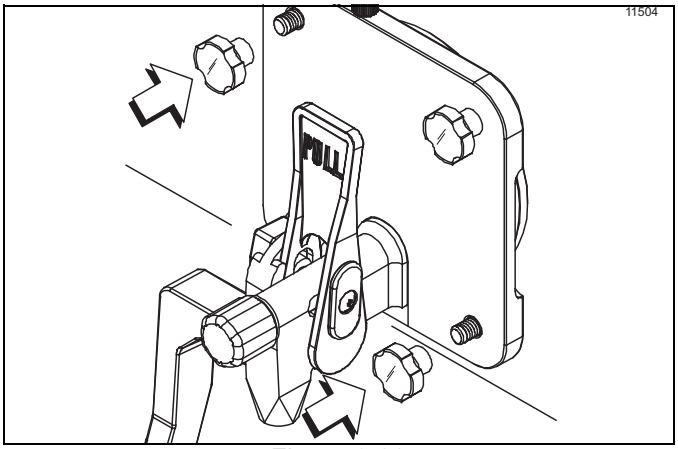

Figure 6-20

20. Repeat these steps for the other freezing cylinder.

Sanitizing

Note: *If a machine is sanitized, and will not be used for an extended period of time, clean water should be used to flush all sanitizer from the lines. Remove the water from all the lines and components prior to storing the machine. Upon return to service, the machine must be sanitized prior to use.*

1. Open the lighted display door. Place the control switch in the ON position.

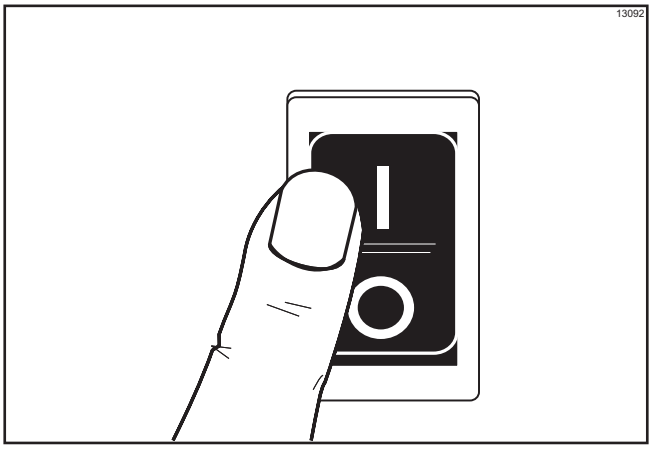

Figure 6-21

2. Prepare 2 gal. (7.6 L) of an approved 100 ppm sanitizing solution (examples: Stera-Sheen® or Kay-5®). Use warm water and follow the manufacturer's specifications.

Important! *Make sure the sanitizer is completely*

dissolved.

3. Cut the syrup line connector from the end of an empty bag of syrup.

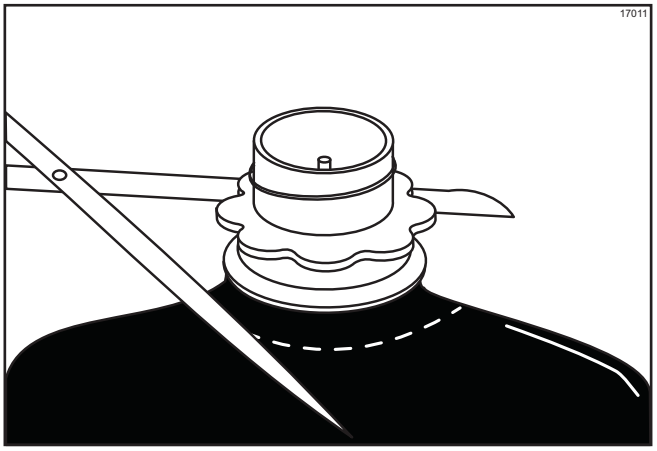

Figure 6-22

4. Connect the syrup line to the syrup line connector that was cut from the syrup bag.

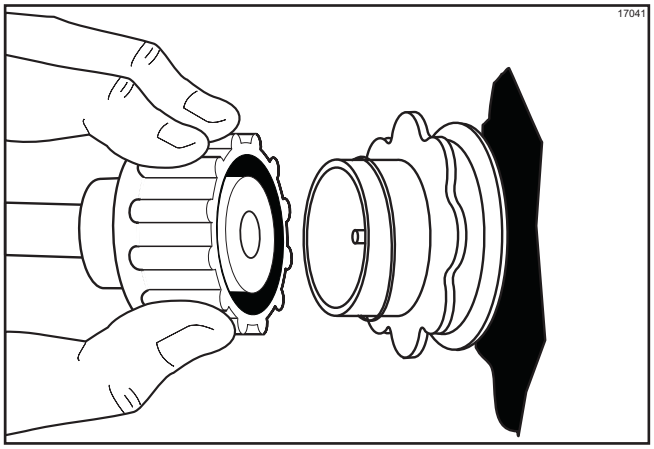

Figure 6-23

5. With the bag connector attached to the syrup line, place the syrup line into the pail of sanitizing solution.

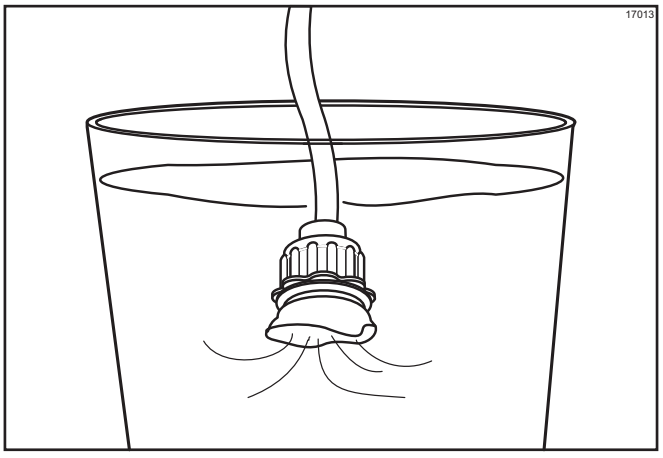

Figure 6-24

6. To place the left freezing cylinder in the Sanitize mode, press the MENU (SEL) key. Move the cursor by pressing the AUTO (- ->) key until the third line indicates RINSE / SANITIZE.

```
          OPERATOR MENU
          A B C D E F G H I
          RINSE / SANITIZE
<- - - ->                    SEL
```

Press the MENU (SEL) key.

Move the cursor under the word **SANITIZE** by pressing the OFF (<- -) key.

```
          RINSE / SANITIZE
RINSE          SANITIZE      EXIT
                - - - - -
<- - - ->                    SEL
```

7. Pressing the MENU (SEL) key will give you the option for sanitizing the left freezing cylinder. Move the cursor under the word **YES**. Pressing the MENU (SEL) key at this time will start the flow of sanitizing solution into the left freezing cylinder.

```
          SANITIZE
LEFT  SIDE          YES      NO
                    - - -
<- - - ->                    SEL
```

8. Repeat steps 6 and 7 for the right side freezing cylinder**.**

```
          SANITIZE
RIGHT  SIDE         YES      NO
                    - - -
<- - - ->                    SEL
```

9. Open the prime plugs. When sanitizing solution fills the freezing cylinders approximately 2/3 full, close the prime plugs.

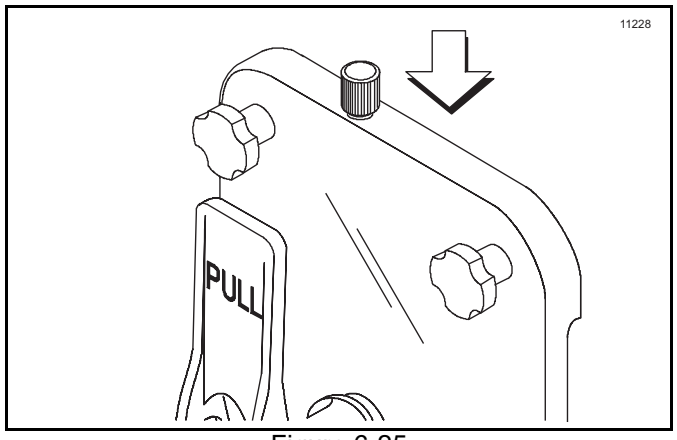

Figure 6-25

10. Continue filling the freezing cylinders with sanitizing solution until the solution purges out of the relief valve at the top of the mix tank, and begins draining into the front drip tray. Press the OFF (<- -) key.
11. Press the BEATER (- - -) key. Agitate the solution in the freezing cylinders for 5 minutes.

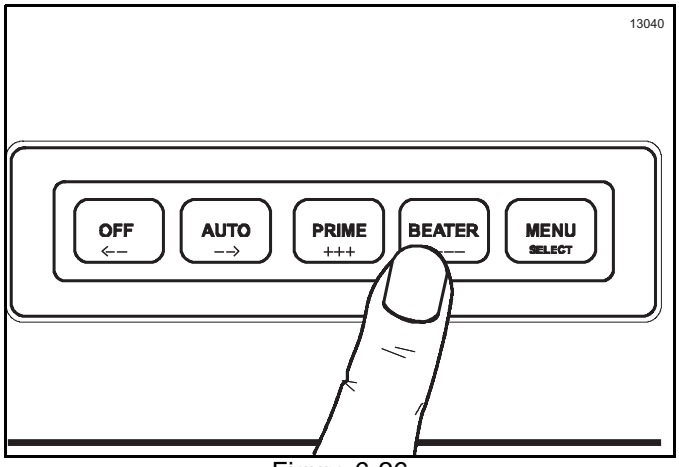

Figure 6-26

12. With a pail beneath the door spouts, open the draw valves and drain all the solution from the freezing cylinders. Press the OFF (<- -) key and close the draw valves.

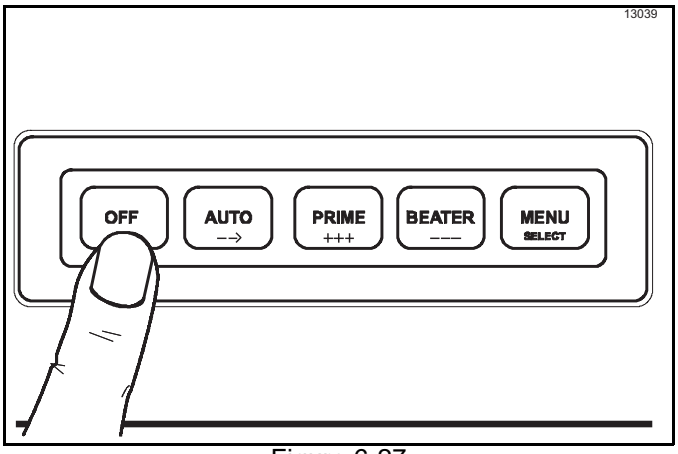

Figure 6-27

13. Disconnect the syrup connectors in the sanitizing solution.

Priming/Brixing

1. Connect the syrup line to the bag-in-box (BIB) syrup.
2. Remove the drip tray, splash shield, and lower front panel to gain access to the syrup sampling valves.
3. Open the prime plug.

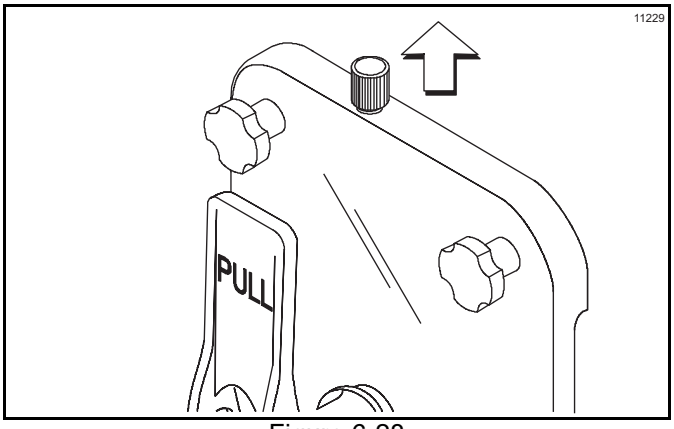

Figure 6-28

4. Place the sampling valve in the OFF (center) position.

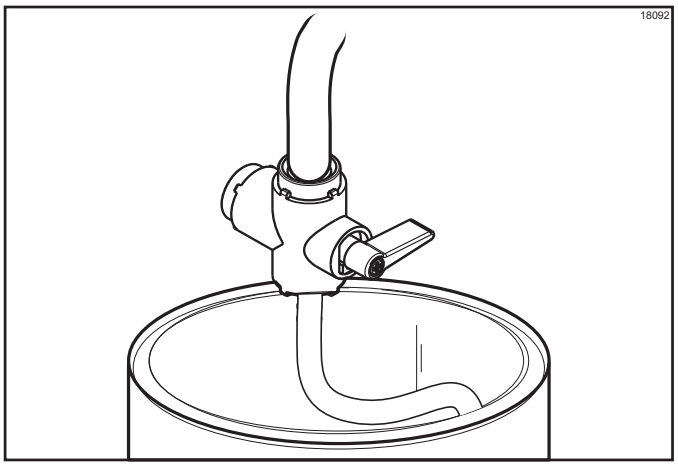

Figure 6-29

5. Press the PRIME (+ + +) key.

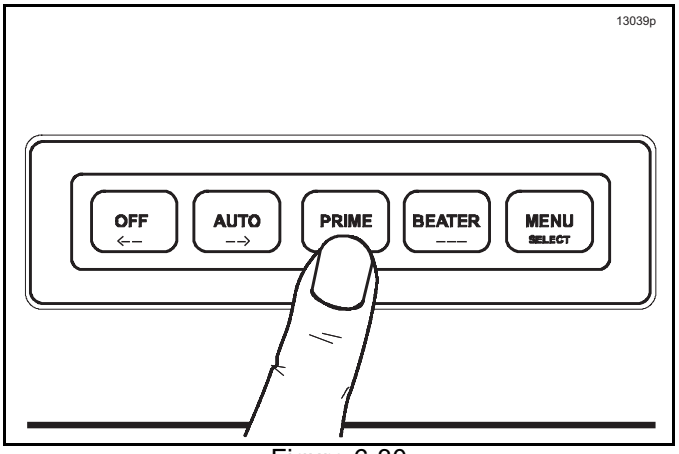

Figure 6-30

6. Slowly move the syrup sampling valve to the fully open position by turning the handle **down** toward the sampling line. Allow the liquid to run into a pail until all the sanitizer is removed and full-strength product is flowing.

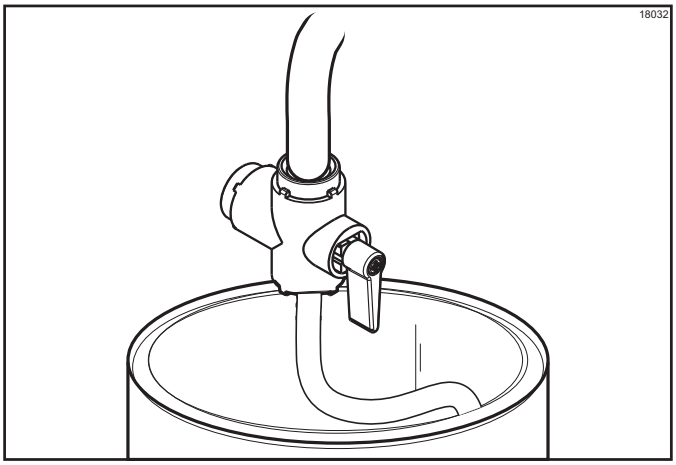

Figure 6-31

Note: *Brix is the ratio of syrup to water which will directly affect the quality and taste of the product. Brixing should be done before priming the freezer and when a change in syrup flavor has been made.*

7. Drain the product from the syrup sampling valve into a cup. Close the syrup sampling valve by turning the handle to the center position.

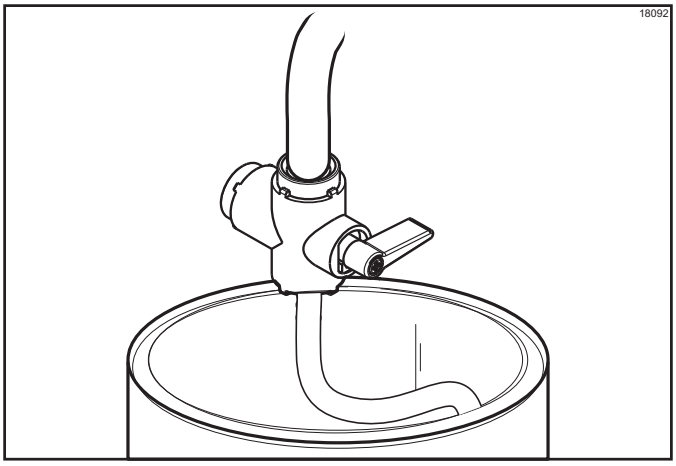

Figure 6-32

8. Stir the finished product. Pour a small amount of product over the refractometer. The brix reading should register 13 to 14. A reading higher than this would cause a darker, richer product. The refrigeration system would have to run longer to freeze this excess syrup. A reading lower than this could cause a freeze-up in the freezing cylinder because of the excess water.

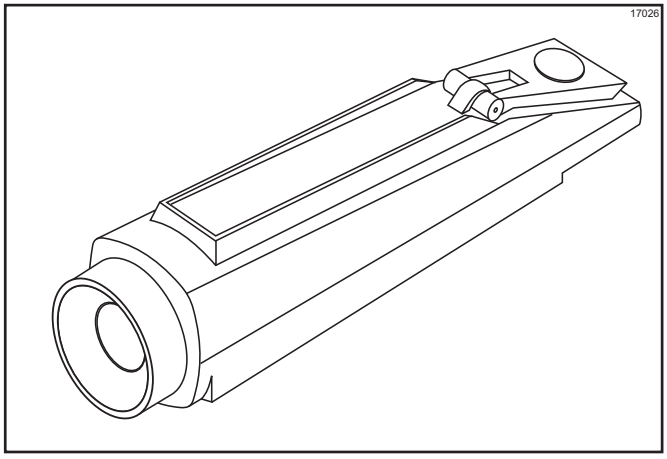

Figure 6-33

9. To adjust the brix, turn the adjustment screw located behind the drip tray shelf. Clockwise adjustments increase the amount of syrup to water, and counterclockwise adjustments decrease the amount of syrup to water. Adjust the screw in small increments and check the brix again.

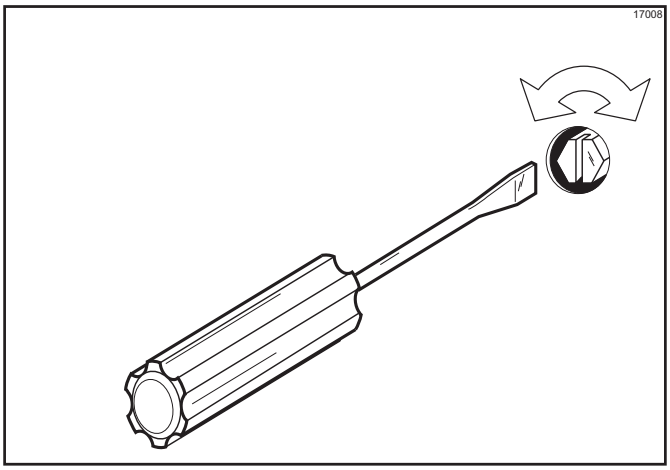

Figure 6-34

10. Repeat steps until a correct brix reading is registered.
11. Once the proper brix has been achieved, turn the handle **up** to allow product to flow to the mix tank.

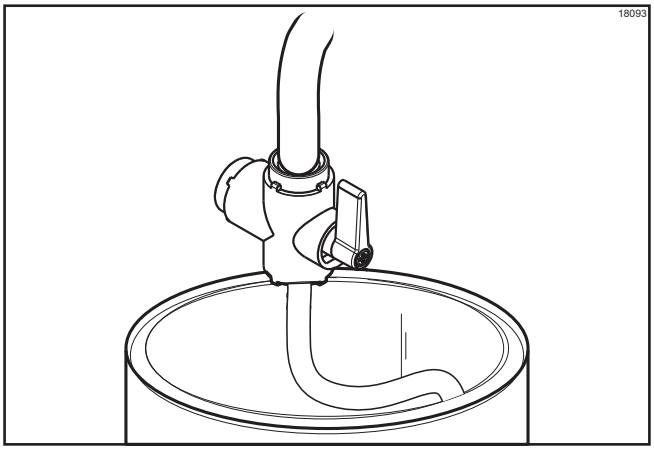

Figure 6-35

Note: *The position of the handle on the syrup sampling valve determines the direction of product flow. The down position opens the syrup sampling valve for collecting brix samples. The center position shuts off the product flow. The up position directs the flow of product to the freezing cylinder.*

12. Place a pail beneath the door spout. Open the draw valve and drain the freezing cylinder to remove any incorrectly brixed product. Close the draw valve.
13. Hold a large cup under the prime plug port on the door until the liquid level (not foam) reaches 1/4 in. to 3/8 in. (6 mm to 9 mm) below the prime hole. Press the OFF (<- -) key and then close the prime plug.
14. Press the BEATER (- - -) key. Let the machine run in the Beater mode for 1 minute. Press the OFF (<- -) key.
15. Press the PRIME (+ + +) key. Allow the liquid level to fill to the prime plug hole
16. Repeat steps 1 through 15 for the other freezing cylinder.
17. To place the freezing cylinders in the Auto mode, press the AUTO (- ->) key on both sides. When the machine cycles off, the product will be at serving viscosity.

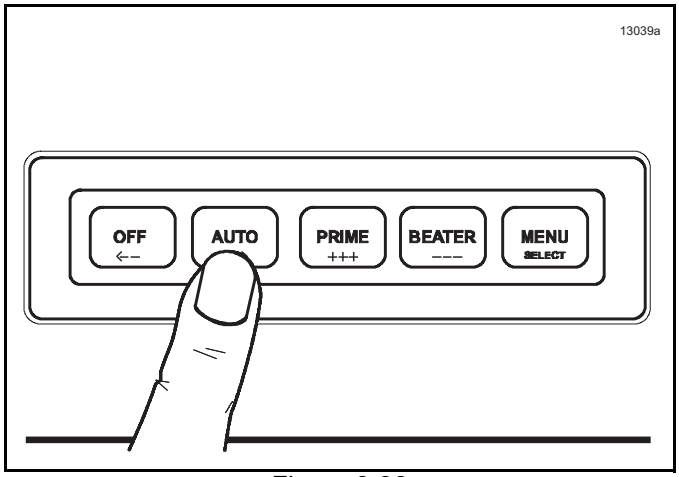

Figure 6-36

18. Close the lighted display when complete. Replace the panels and the hood, and attach with screws. Install the front drip tray and the splash shield on the front of the freezer.

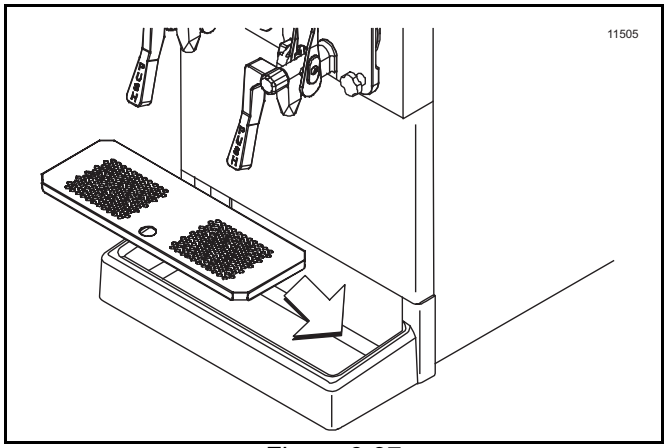

Figure 6-37

120 Day Closing Procedure

We recommend that the machine be completely disassembled and cleaned at least every 120 days.

ALWAYS FOLLOW LOCAL HEALTH CODES.

To disassemble the Model C300, the following items will be needed:

- Two cleaning pails
- Cleaning brushes (provided with freezer)
- Cleaner
- Single-service towels

Draining Product from the Freezing Cylinder

1. With a pail beneath the door spout, press the BEATER (- - -) key. This will allow the beater to operate and CO_2 pressure will be maintained to push the product from the freezing cylinder. Open the draw valve and drain the product from the machine until the CO_2 begins to jet.

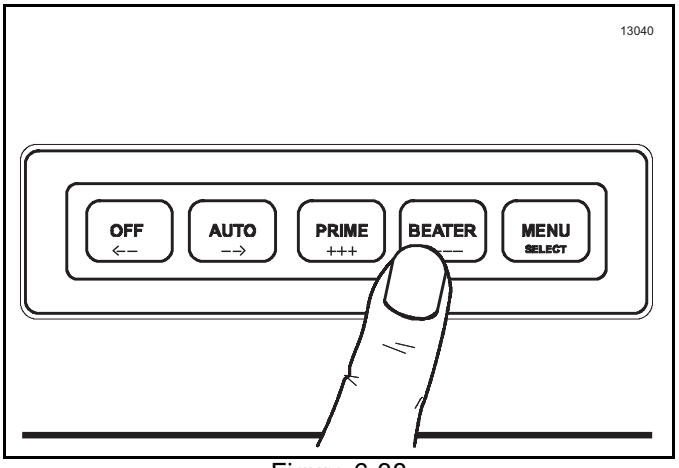

Figure 6-38

2. When all the product has been drained from the freezing cylinder, close the draw valve and press the OFF (<- -) key. Discard this product.

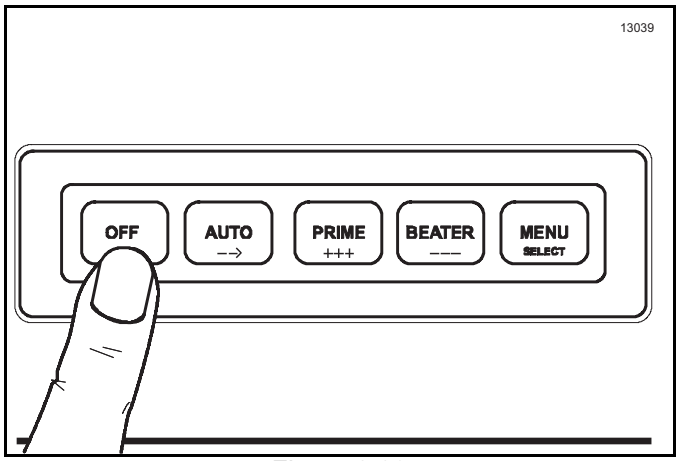

Figure 6-39

3. Repeat steps 1 and 2 for the other freezing cylinder.

Rinsing

1. To place the left cylinder in the Rinse mode, press the MENU (SEL) key. Move the cursor by pressing the AUTO (- ->) key until the third line indicates RINSE / SANITIZE.

```
OPERATOR MENU
A B C D E F G H I
RINSE / SANITIZE
<- - ->                    SEL
```

Press the MENU (SEL) key. Move the cursor under **RINSE** by pressing the OFF (<- -) key twice.

```
RINSE / SANITIZE
RINSE          SANITIZE        EXIT
- - - -
<- - ->                        SEL
```

2. Pressing the MENU (SEL) key will give you the option for rinsing the left freezing cylinder. Move the cursor under the word **YES**. Pressing the MENU (SEL) key at this time will start the beater motor and deliver water and CO_2 to the left cylinder.

```
RINSE
LEFT  SIDE              YES      NO
                        - - -
<- - ->                        SEL
```

3. Allow the rinse water to flow into the cylinder until it is approximately 2/3 full. With a pail under the door spout, open the draw valve and drain the rinse water. Repeat this step until the rinse water being drawn is clear.
4. Repeat steps 2 and 3 for the right side.

RINSE		
RIGHT SIDE	YES - - -	NO
<- - - ->		SEL

5. When draining is complete, press the OFF (<- -) key.

Cleaning

1. Prepare 1 gal. (7.6 L) of an approved cleaning solution (examples: Stera-Sheen® or Kay-5®). Use warm water and follow the manufacturer's specifications.

   Important! *Make sure the cleaner is completely dissolved.*
2. Place the syrup line with the old syrup connector into the pail of cleaner
3. To place the left freezing cylinder in the Sanitize mode, press the MENU (SEL) key. Move the cursor by pressing the AUTO (- ->) key until the third line indicates RINSE / SANITIZE. Press the MENU (SEL) key. Move the cursor under the word **SANITIZE**.

RINSE / SANITIZE		
RINSE	SANITIZE - - - - -	EXIT
<- - - ->		SEL

   Pressing the MENU (SEL) key will give you the option to sanitize the left cylinder. Move the cursor under the word **YES**. Pressing the MENU (SEL) key at this time will start the flow of cleaner/sanitizer through the syrup system into the freezing cylinder.

SANITIZE		
LEFT SIDE	YES - - -	NO
<- - - ->		SEL

4. Repeat steps 1 through 3 for the right side freezing cylinder.
5. Open the prime plugs. Allow each cylinder to fill approximately 2/3 full. Close each prime plug.
6. Continue filling the freezing cylinders with sanitizing solution until the solution purges out of each vent, and begins draining into the front drip tray.
   The relief valves are located at the top of each mix tank. Press the OFF (<- -) key
7. Press the BEATER (- - -) key to agitate the solution in each freezing cylinder for 5 minutes.

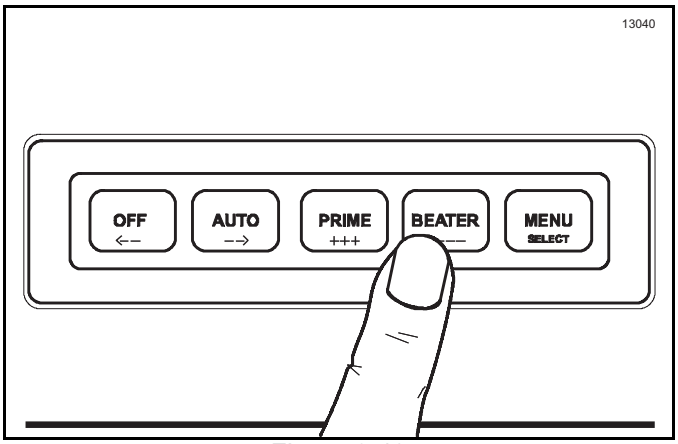

Figure 6-40

8. With a pail beneath the door spouts, open the draw valves and drain all the solution from the freezing cylinders. Press the OFF (<- -) key and close the draw valves.

Disassembly

WARNING! Make sure the control switch is in the OFF position to eliminate the chance of moving parts. Failure to follow this instruction may result in severe personal injury from hazardous moving parts.

1. Make sure the control switch is in the OFF position. Open the draw valves to make sure all pressure has been relieved.
2. Open the prime plug. Leave the prime plug open when removing the freezer door to ensure that all pressure is relieved from the freezing cylinder.

3. Remove the following parts from the freezer and take them to the sink for brush-cleaning:
   - Hand screws
   - Freezer doors
   - Baffle assemblies
   - Beater assemblies and scraper blades
   - Driveshafts
   - Hopper covers
   - Front drip tray
   - Splash shield

Brush-Cleaning

1. Prepare a sink or a pail with an approved cleaning solution. Use warm water and follow the manufacturer's specifications (examples: Stera-Sheen® or Kay-5®).

   Important! *Follow the label directions. Too* ***strong*** *of a solution can cause parts damage, while too* ***mild*** *of a solution will not provide adequate cleaning. Make sure all brushes provided with the freezer are available for brush-cleaning.*

2. Return to the freezer with a small amount of cleaning solution. With a single-service towel, wipe clean the rear shell bearing surface. Brush-clean the rear shell bearings at the back of the freezing cylinders with the black bristle brush.

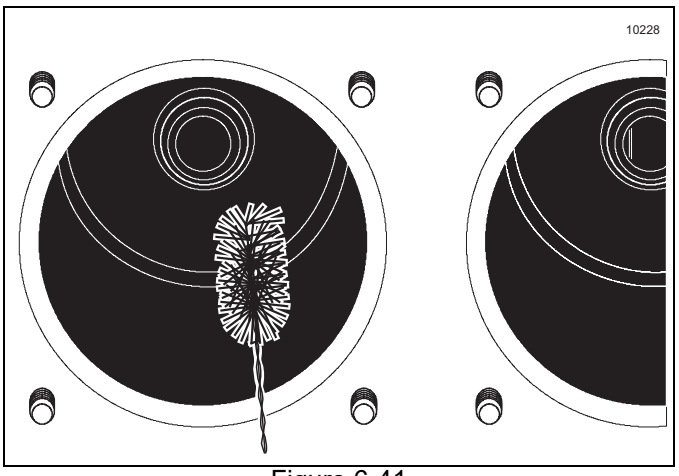

Figure 6-41

3. Remove the:
   - Seals and O-rings from the driveshafts
   - Driveshaft seal bushings from driveshaft seals
   - Caps and springs from freezer doors
   - Screws and draw handle slides from freezer doors
   - Pivot pins from draw valves
   - Draw valve handles from freezer doors
   - Draw valves from freezer doors
   - O-rings from draw valves
   - Prime plugs from freezer doors
   - O-rings from prime plugs
   - O-rings and front bearings from freezer doors

   Discard all O-rings and replace them with new ones.

   Note: *To remove O-rings, use a single-service towel to grasp the O-ring, and apply pressure upward until the O-ring pops out of its groove. With the other hand, push the top of the O-ring forward until it rolls out of the groove and can be removed easily.*

4. Using a single-service towel, wipe the lubricant off the parts. Brush-clean all disassembled parts in the cleaning solution. Make sure all lubricant and syrup is removed. Place all the cleaned parts on a clean, dry surface to air-dry.
5. Wipe clean all the exterior surfaces of the machine.

During Cleaning and Sanitizing

ALWAYS FOLLOW LOCAL HEALTH CODES.

NOTICE! Cleaning and sanitizing schedules are governed by your federal, state, or local regulatory agencies and must be followed accordingly. Please see the cleaning section of this manual for the proper procedure to clean this machine.

Note: *We recommend cleaning and sanitizing every 120 days.*

Troubleshooting Bacterial Count

- ☐ Thoroughly clean and sanitize the machine regularly, including complete disassembly and brush-cleaning.
- ☐ Use all brushes supplied for thorough cleaning. The brushes are specially designed to reach all product passageways
- ☐ Use the black bristle brush to thoroughly clean the rear shell bearing located at the rear of the freezing cylinder. Use a generous amount of cleaning solution on the brush.
- ☐ Using a screwdriver and a cloth towel, clean the rear shell bearing and the female hex drive socket of lubricant and product deposits.
- ☐ Properly prepare the cleaning and sanitizing solutions. Read and follow the label directions carefully. Too **strong** of a solution may damage the parts, and too **weak** of a solution will not do an adequate job of cleaning or sanitizing.
- ☐ Clean and sanitize the syrup lines regularly to prevent syrup residue buildup that would restrict the proper flow of syrup.
- ☐ On a regular basis, take a brix reading to ensure a consistent quality product.

Regular Maintenance Checks

- ☐ Replace scraper blades that are nicked, damaged, or worn down.
- ☐ Before installing the beater, make sure that the scraper blades are properly attached over the pins.
- ☐ Check the rear shell bearing for signs of wear (excessive product leakage from the rear drip pans to the front drip tray).
- ☐ Dispose of O-rings or seals if they are worn, torn, or fit too loosely, and replace them with new ones.
- ☐ Follow all lubricating procedures as outlined in “Assembly” on page 6-1
- ☐ Check the condenser for dirt and lint. A dirty condenser will reduce the efficiency and capacity of the machine. The condenser should be cleaned monthly by removing and cleaning the poly-flo filter.

Winter Storage

If the place of business is to be closed during the winter months, it is important to protect the freezer by following certain precautions, particularly if the building is subject to freezing conditions.

Disconnect the freezer from the main power source to prevent possible electrical damage.

Your local Taylor distributor can perform this service for you.

Wrap detachable parts of the freezer such as the beater, scraper blades, driveshaft, and freezer door. Place these parts in a protected, dry place. Rubber trim parts and gaskets can be protected by wrapping them with moisture-proof paper. All parts should be thoroughly cleaned of dried mix or lubrication, which can attract mice and other vermin.

Note: *It is recommended that a service technician perform winter storage draining, to ensure all water has been removed. This will guard against freezing and rupturing of the components.*

Notes:

Table 8-1

Problem	Probable cause	Remedy	Page ref
1. Product is too stiff.	a. Too much water to syrup ratio. Improper brix adjustment.	a. Adjust the brix accordingly.	6-8
	b. Consistency control needs adjustment.	b. Contact a service technician.	- - -
	c. Torque coupling bound in **warm** position.	c. Contact a service technician.	- - -
2. Product is too soft.	a. Freezer in a defrost cycle.	a. Wait for defrost cycle to end.	- - -
	b. Consistency control needs adjustment.	b. Contact a service technician.	- - -
	c. Torque coupling bound in **cold** position.	c. Contact a service technician.	- - -
	d. Broken springs in torque coupling.	d. Contact a service technician.	- - -
3. No product is being dispensed.	a. Product frozen-up in freezing cylinder.	a. See problem No. 1.	- - -
4. Freezer will not operate in the Beater or Auto modes.	a. Machine is unplugged.	a. Check the plug at wall receptacle.	- - -
	b. Blown fuse, or the circuit breaker is off.	b. Replace the fuse or turn the breaker on.	- - -
	c. Beater motor is out on overload. Check fault description screen.	c. Allow the motor to cool. Press the AUTO (- ->) key. Call a service technician if the beater motor goes out on overload again.	4-2
5. No compressor operation in the Auto mode.	a. Beater motor is out on overload. Check the fault description screen.	a. Allow the motor to cool. Press the AUTO (- ->) key. Call a service technician if the beater motor goes out on overload again.	4-2
	b. Condenser dirty, A/C.	b. Clean condenser monthly.	6-10
	c. Water supply off, W/C.	c. Turn the water on.	- - -
	d. The torque coupling is bound in the cold position.	d. Contact a service technician.	- - -
6. Unable to remove the driveshaft from the rear shell bearing.	a. Rounded corners of hex end of driveshaft, drive coupling, or both.	a. Replace the driveshaft, or call a service technician to replace the direct drive unit.	- - -
	b. Lubrication of hex end of driveshaft.	b. Do not lubricate the hex end. If necessary, contact a service technician for removal.	6-1
7. Excessive loss of CO_2.	a. Leak in the CO_2 system.	a. Contact a service technician.	- - -

Problem	Probable cause	Remedy	Page ref
8. Leakage from rear drip pan(s) into front drip tray.	a. Seal or O-ring on driveshaft is worn, missing, or incorrectly installed.	a. Replace or install correctly on driveshaft.	6-1
	b. Worn rear shell bearing.	b. Contact a service technician.	- - -
9. Excessive mix leakage from door spout.	a. Inadequate lubrication of draw valve O-rings.	a. Lubricate properly.	6-3
	b. Wrong type lubricant on draw valve O-rings.	b. Use food grade lubricant (example: Taylor Lube HP).	6-1
	c. Worn or missing draw valve O-rings.	c. Replace or install O-rings on draw valve.	6-3 / 9-1
10. Unable to adjust brix.	a. Syrup lines need to be cleaned and sanitized.	a. Clean and sanitize syrup lines.	- - -
	b. Blocked flow control.	b. Contact a service technician.	- - -
11. Lack of syrup being supplied to machine.	a. Loss of CO_2 to propel syrup.	a. Contact a service technician.	- - -
	b. Clogged or kinked syrup lines.	b. Sanitize syrup lines regularly. If kinked, repair or replace.	- - -

Table 9-1

Part Description	Every 4 Months	Every 8 Months	Annually
Scraper Blade		X	
Driveshaft Seal	X		
Driveshaft O-ring	X		
Freezer Door Gasket	X		
Draw Valve O-ring	X		
Front Bearing	X		
Prime Plug O-ring	X		
Black Bristle Brush, 1” x 2”		Inspect and replace if necessary.	Minimum
Double-Ended Brush		Inspect and replace if necessary.	Minimum
Brush, 1-1/2” x 2”		Inspect and replace if necessary.	Minimum
Brush, 3” x 7”		Inspect and replace if necessary.	Minimum

Notes:

Section 10 Limited Warranty on Equipment

TAYLOR COMPANY LIMITED WARRANTY ON FREEZERS

Taylor Company, is pleased to provide this limited warranty on new Taylor-branded freezer equipment available from Taylor to the market generally (the “Product”) to the original purchaser only.

LIMITED WARRANTY

Taylor warrants the Product against failure due to defect in materials or workmanship under normal use and service as follows. All warranty periods begin on the date of original Product installation. If a part fails due to defect during the applicable warranty period, Taylor, through an authorized Taylor distributor or service agency, will provide a new or remanufactured part, at Taylor’s option, to replace the failed defective part at no charge for the part. Except as otherwise stated herein, these are Taylor’s exclusive obligations under this limited warranty for a Product failure. This limited warranty is subject to all provisions, conditions, limitations, and exclusions listed below and on the reverse (if any) of this document.

Table 10-1

Product	Part	Limited Warranty Period
Soft Serve	Insulated shell assembly	Five (5) years
Frozen Yogurt	Refrigeration compressor (except service valve)	Five (5) years
Shakes Smoothies	Beater motors	Two (2) years
Frozen Beverage	Beater drive gear	Two (2) years
Batch Desserts	Printed circuit boards and Softech controls beginning with serial number H8024200	Two (2) years
	Parts not otherwise listed in this table or excluded below	One (1) year

LIMITED WARRANTY CONDITIONS

1. If the date of original installation of the Product cannot be verified, then the limited warranty period begins ninety (90) days from the date of Product manufacture (as indicated by the Product serial number). Proof of purchase may be required at time of service.
2. This limited warranty is valid only if the Product is installed and all required service work on the Product is performed by an authorized Taylor distributor or service agency, and only if genuine, new Taylor parts are used.
3. Installation, use, care, and maintenance must be normal and in accordance with all instructions contained in the Taylor Operator’s Manual.
4. Defective parts must be returned to the authorized Taylor distributor or service agency for credit.
5. The use of any refrigerant other than that specified on the Product’s data label will void this limited warranty.

LIMITED WARRANTY EXCEPTIONS

This limited warranty does **not** cover:

1. Labor or other costs incurred for diagnosing, repairing, removing, installing, shipping, servicing, or handling of defective parts, replacement parts, or new Products.
2. Normal maintenance, cleaning, and lubrication as outlined in the Taylor Operator’s Manual, including cleaning of condensers.
3. Replacement of wear items designated as Class “000” parts in the Taylor Operator’s Manual.

4. External hoses, electrical power supplies, and machine grounding.
5. Parts not supplied or designated by Taylor, or damages resulting from their use.
6. Return trips or waiting time required because a service technician is prevented from beginning warranty service work promptly upon arrival.
7. Failure, damage or repairs due to faulty installation, misapplication, abuse, no or improper servicing, unauthorized alteration, or improper operation or use as indicated in the Taylor Operator's Manual, including but not limited to the failure to use proper assembly and cleaning techniques, tools, or approved cleaning supplies.
8. Failure, damage, or repairs due to theft, vandalism, wind, rain, flood, high water, water, lightning, earthquake, or any other natural disaster, fire, corrosive environments, insect or rodent infestation, or other casualty, accident or condition beyond the reasonable control of Taylor; operation above or below the electrical or water supply specification of the Product; or components repaired or altered in any way so as, in the judgment of the Manufacturer, to adversely affect performance, or normal wear or deterioration.
9. Any Product purchased over the Internet.
10. Failure to start due to voltage conditions, blown fuses, open circuit breakers, or damages due to the inadequacy or interruption of electrical service.
11. Electricity or fuel costs, or increases in electricity or fuel costs from any reason whatsoever.
12. Damages resulting from the use of any refrigerant other than that specified on the Product's data label will void this limited warranty.
13. Any cost to replace, refill, or dispose of refrigerant, including the cost of refrigerant.
14. **ANY SPECIAL, INDIRECT, OR CONSEQUENTIAL PROPERTY OR COMMERCIAL DAMAGE OF ANY NATURE WHATSOEVER.** Some jurisdictions do not allow the exclusion of incidental or consequential damages, so this limitation may not apply to you.

This limited warranty gives you specific legal rights, and you may also have other rights which vary from jurisdiction to jurisdiction.

LIMITATION OF WARRANTY

THIS LIMITED WARRANTY IS EXCLUSIVE AND IS IN LIEU OF ALL OTHER WARRANTIES, CONDITIONS, AND/OR REMEDIES UNDER THE LAW, INCLUDING ANY IMPLIED WARRANTIES OR CONDITIONS OF MERCHANTABILITY OR FITNESS FOR A PARTICULAR PURPOSE. THE ORIGINAL OWNER'S SOLE REMEDY WITH RESPECT TO ANY PRODUCTS SHALL BE REPAIR OR REPLACEMENT OF DEFECTIVE COMPONENTS UNDER THE TERMS OF THIS LIMITED WARRANTY. ALL RIGHTS TO CONSEQUENTIAL OR INCIDENTAL DAMAGES (INCLUDING CLAIMS FOR LOST SALES, LOST PROFITS, PRODUCT LOSS, PROPERTY DAMAGES, OR SERVICE EXPENSES) ARE EXPRESSLY EXCLUDED. THE EXPRESS WARRANTIES MADE IN THIS LIMITED WARRANTY MAY NOT BE ALTERED, ENLARGED, OR CHANGED BY ANY DISTRIBUTOR, DEALER, OR OTHER PERSON, WHATSOEVER.

LEGAL REMEDIES

The owner **must** notify Taylor in writing, by certified or registered letter to the following address, of any defect or complaint with the Product, stating the defect or complaint and a specific request for repair, replacement, or other correction of the Product under warranty, mailed at least thirty (30) days before pursuing any legal rights or remedies.

Taylor Company
750 N. Blackhawk Blvd.
Rockton, IL 61072, U.S.A.

TAYLOR COMPANY LIMITED WARRANTY ON TAYLOR GENUINE PARTS

Taylor Company, is pleased to provide this limited warranty on new Taylor genuine replacement components and parts available from Taylor to the market generally (the “Parts”) to the original purchaser only.

LIMITED WARRANTY

Taylor warrants the Parts against failure due to defect in materials or workmanship under normal use and service as follows. All warranty periods begin on the date of original installation of the Part in the Taylor unit. If a Part fails due to defect during the applicable warranty period, Taylor, through an authorized Taylor distributor or service agency, will provide a new or remanufactured Part, at Taylor’s option, to replace the failed defective Part at no charge for the Part. Except as otherwise stated herein, these are Taylor’s exclusive obligations under this limited warranty for a Part failure. This limited warranty is subject to all provisions, conditions, limitations, and exclusions listed below and on the reverse (if any) of this document.

Table 11-1

Parts Warranty Class Code or Part	Limited Warranty Period
Class 103 Parts[1]	Three (3) months
Class 212 Parts[2]	Twelve (12) months
Class 512 Parts	Twelve (12) months No warranty
Class 000 Parts	No warranty
Taylor Part #072454 (Motor- 24VDC *C832/C842*)	Four (4) years

LIMITED WARRANTY CONDITIONS

1. If the date of original installation of the Part cannot be otherwise verified, proof of purchase may be required at time of service.
2. This limited warranty is valid only if the Part is installed and all required service work in connection with the Part is performed by an authorized Taylor distributor or service agency.
3. The limited warranty applies only to Parts remaining in use by their original owner at their original installation location in the unit of original installation.
4. Installation, use, care, and maintenance must be normal and in accordance with all instructions contained in the Taylor Operator’s Manual.
5. Defective Parts must be returned to the authorized Taylor distributor or service agency for credit.
6. This warranty is not intended to shorten the length of any warranty coverage provided pursuant to a separate Taylor Limited Warranty on freezer or grill equipment.
7. The use of any refrigerant other than that specified for the unit in which the Part is installed will void this limited warranty.

[1, 2] Except that Taylor Part #032129SER2 (Compressor-Air-230V SERV) and Taylor Part #075506SER1 (Compressor-Air-115V 60HZ) shall have a limited warranty period of twelve (12) months when used in Taylor freezer equipment and a limited warranty period of two (2) years when used in Taylor grill equipment.

LIMITED WARRANTY EXCEPTIONS

This limited warranty does **not** cover:

1. Labor or other costs incurred for diagnosing, repairing, removing, installing, shipping, servicing, or handling of defective Parts, replacement Parts, or new Parts.
2. Normal maintenance, cleaning and lubrication as outlined in the Taylor Operator's Manual, including cleaning of condensers or carbon and grease buildup.
3. Required service, whether cleaning or general repairs, to return the cooking surface assemblies, including the upper platen and lower plate, to an operational condition to achieve proper cooking or allow proper assembly of release sheets and clips as a result of grease buildup on the cooking surfaces, including but not limited to the platen and plate, sides of the shroud or top of the shroud.
4. Replacement of cooking surfaces, including the upper platen and lower plate, due to pitting or corrosion (or in the case of the upper platen, due to loss of plating) as a result of damage due to the impact of spatulas or other small wares used during the cooking process or as a result of the use of cleaners, cleaning materials, or cleaning processes not approved for use by Taylor.
5. Replacement of wear items designated as Class "000" Parts in the Taylor Operator's Manual, as well as any release sheets and clips for the Product's upper platen assembly.
6. External hoses, electrical power supplies, and machine grounding.
7. Parts not supplied or designated by Taylor, or damages resulting from their use.
8. Return trips or waiting time required because a service technician is prevented from beginning warranty service work promptly upon arrival.
9. Failure, damage, or repairs due to faulty installation, misapplication, abuse, no or improper servicing, unauthorized alteration or improper operation or use as indicated in the Taylor Operator's Manual, including but not limited to the failure to use proper assembly and cleaning techniques, tools, or approved cleaning supplies.
10. Failure, damage, or repairs due to theft, vandalism, wind, rain, flood, high water, water, lightning, earthquake, or any other natural disaster, fire, corrosive environments, insect or rodent infestation, or other casualty, accident or condition beyond the reasonable control of Taylor; operation above or below the gas, electrical or water supply specification of the unit in which a part is installed; or Parts or the units in which they are installed repaired or altered in any way so as, in the judgment of Taylor, to adversely affect performance, or normal wear or deterioration.
11. Any Part purchased over the Internet.
12. Failure to start due to voltage conditions, blown fuses, open circuit breakers, or damages due to the inadequacy or interruption of electrical service.
13. Electricity, gas, or other fuel costs, or increases in electricity or fuel costs from any reason whatsoever.
14. Damages resulting from the use of any refrigerant other than that specified for the unit in which the Part is installed will void this limited warranty.
15. Any cost to replace, refill, or dispose of refrigerant, including the cost of refrigerant.
16. **ANY SPECIAL, INDIRECT OR CONSEQUENTIAL PROPERTY OR COMMERCIAL DAMAGE OF ANY NATURE WHATSOEVER.** Some jurisdictions do not allow the exclusion of incidental or consequential damages, so this limitation may not apply to you.

This limited warranty gives you specific legal rights, and you may also have other rights which vary from jurisdiction to jurisdiction.

LIMITATION OF WARRANTY

THIS LIMITED WARRANTY IS EXCLUSIVE AND IS IN LIEU OF ALL OTHER WARRANTIES, CONDITIONS, AND/OR REMEDIES UNDER THE LAW, INCLUDING ANY IMPLIED WARRANTIES OR CONDITIONS OF MERCHANTABILITY OR FITNESS FOR A PARTICULAR PURPOSE. THE ORIGINAL OWNER'S SOLEREMEDY WITH RESPECT TO ANY PRODUCTS SHALL BE REPAIR OR REPLACEMENT OF DEFECTIVE PARTS UNDER THE TERMS OF THIS LIMITED WARRANTY. ALL RIGHTS TO CONSEQUENTIAL OR INCIDENTAL DAMAGES (INCLUDING CLAIMS FOR LOST SALES, LOST PROFITS, PRODUCT LOSS, PROPERTY DAMAGES, OR SERVICE EXPENSES) ARE EXPRESSLY EXCLUDED. THE EXPRESS WARRANTIES MADE IN THIS LIMITED WARRANTY MAY NOT BE ALTERED, ENLARGED, OR CHANGED BY ANY DISTRIBUTOR, DEALER, OR OTHER PERSON, WHATSOEVER.

LEGAL REMEDIES

The owner **must** notify Taylor in writing, by certified or registered letter to the following address, of any defect or complaint with the Part, stating the defect or complaint and a specific request for repair, replacement, or other correction of the Part under warranty, mailed at least thirty (30) days before pursuing any legal rights or remedies.

Taylor Company
750 N. Blackhawk Blvd.
Rockton, IL 61072, U.S.A.

Notes: