T&S BRASS AND BRONZE WORKS, INC.

2 Saddleback Cove / P.O. Box 1088
Travelers Rest, SC 29690

Travelers Rest, SC: 800-476-4103 • Simi Valley, CA: 800-423-0150 • Fax: 864-834-3518 • www.tsbrass.com

Model No.
002860-40

Item No.

This Space for Architect/Engineer Approval

Job Name_____Date_____

Model Specified_____ Quantity_____

Customer/Wholesaler_____

Contractor_____

Architect/Engineer_____

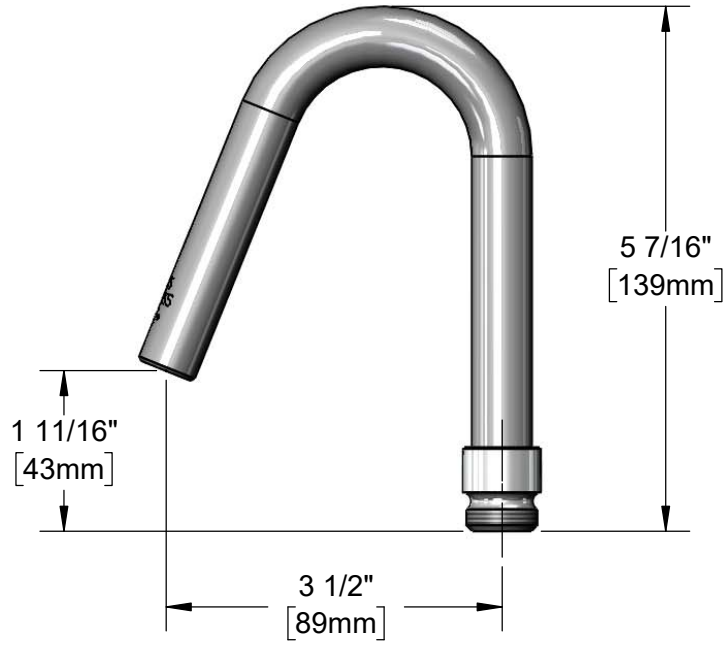

Product Specifications:
Hook Nozzle w/ Plain End Outlet & 3/4-14 UN Male Inlet

Product Compliance:
NSF 61 - Section 9
NSF 372 (Low Lead Content)

Drawn:	Checked:	Approved:	Date:	Scale:	Sheet:
AMG	JRM	JHB	03/21/19	1:2	1 of 2

T&S BRASS AND BRONZE WORKS, INC.

2 Saddleback Cove / P.O. Box 1088
Travelers Rest, SC 29690

Travelers Rest, SC: 800-476-4103 • Simi Valley, CA: 800-423-0150 • Fax: 864-834-3518 • www.tsbrass.com

Model No.
002860-40

Item No.

ITEM NO.	SALES NO.	DESCRIPTION
1	000287-40	Nozzle, B-102A
2	000552-25	Adapter, 5/8-27 Female x 3/4-14 Male

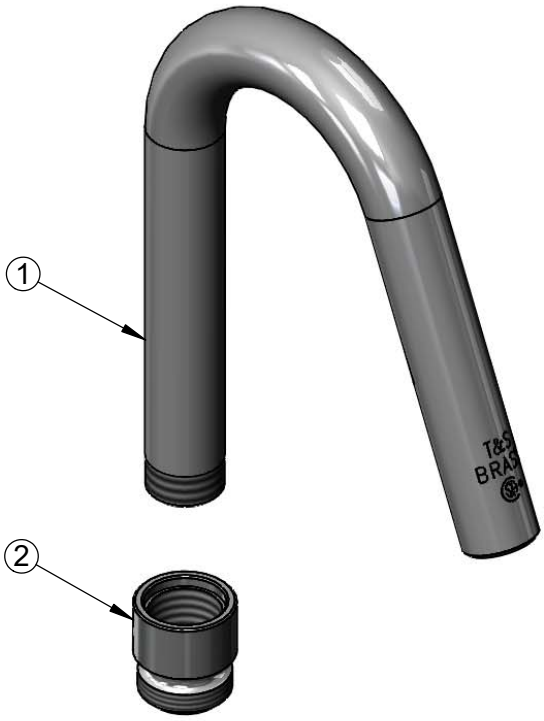

Product Specifications:
Hook Nozzle w/ Plain End Outlet & 3/4-14 UN Male Inlet

Product Compliance:
NSF 61 - Section 9
NSF 372 (Low Lead Content)

Drawn:	Checked:	Approved:	Date:	Scale:	Sheet:
AMG	JRM	JHB	03/21/19	NTS	2 of 2