ADA Compliant

This Space for Architect/Engineer Approval

Job Name_____Date_____

Model Specified_____ Quantity_____

Customer/Wholesaler_____

Contractor_____

Architect/Engineer_____

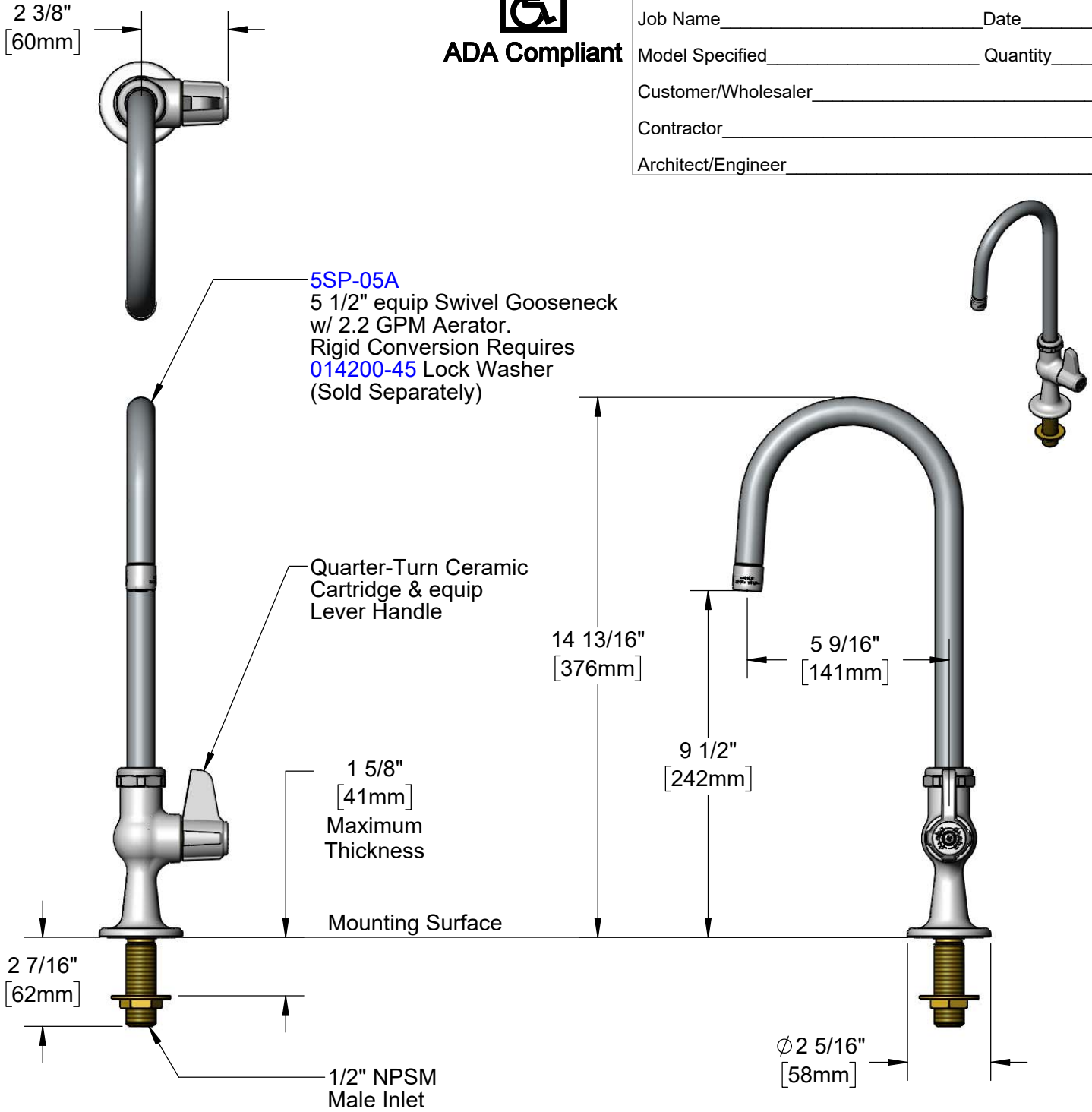

Rough-In Requirement:
∅1" [25mm] Mounting Hole

Model Number

5F-1SLX05A

Product Specifications:

Single Supply Deck Mount Faucet w/ Quarter-Turn Ceramic Cartridge, equip Lever Handle, 5 9/16" equip Swivel Gooseneck, 2.2 GPM Aerator & 1/2" NPSM Male Inlet

Product Compliance:

ASME A112.18.1 / CSA B125.1
NSF 61 - Section 9
NSF 372 (Low Lead Content)
ANSI A117.1 (ADA)

equip Foodservice Accessories

equip by TSB

2 Saddleback Cove, P.O. Box 1088
Travelers Rest, South Carolina 29690
Phone: 800.891.4808 Fax: 800.868.0084
equip.tsbrass.com

Drawn: MRC	Checked: LSA	Approved: JHB	Date: 06/11/21	Scale: 1:4	Sheet: 1 of 2

ITEM NO.	SALES NO.	DESCRIPTION
1	013838-45	2.2 GPM Aerator, 3/4-27 UN Female
2	5SP-05A	5 9/16" equip Swivel Gooseneck w/ 2.2 GPM Aerator
3	013839-25	equip Swivel Nut
4	013848-45	equip Swivel Piece O-Ring
5	5-HDL-L	equip Lever Handle
6	013849-45	Screw, 4mm Metric (10)
7	013787-45	equip Quarter-Turn Ceramic Cartridge, RTC
8	014612-45	Deck Seal
9	000999-45	Brass Lock Washer
10	002954-45	Shank Lock Nut

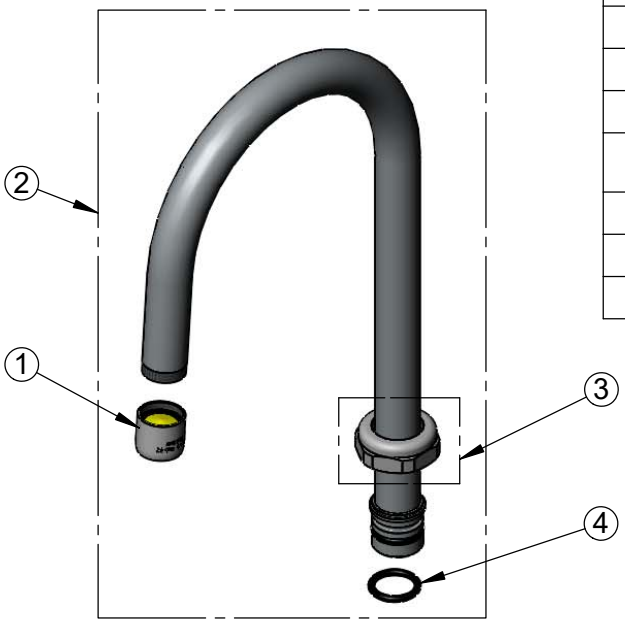

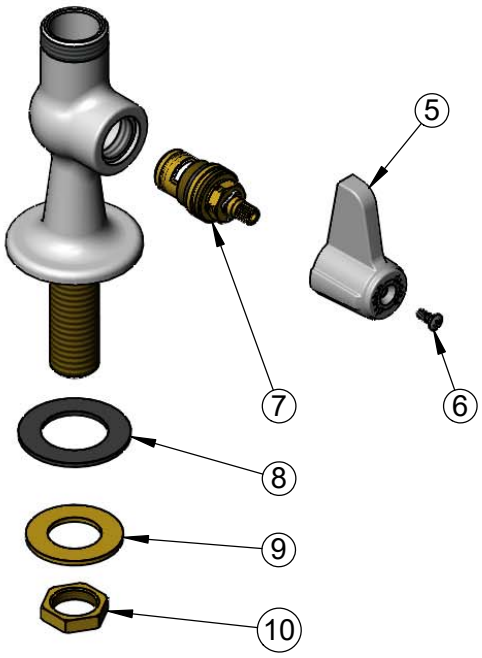

Model Number

5F-1SLX05A

Product Specifications:

Single Supply Deck Mount Faucet w/ Quarter-Turn Ceramic Cartridge, equip Lever Handle, 5 9/16" equip Swivel Gooseneck, 2.2 GPM Aerator & 1/2" NPSM Male Inlet

Product Compliance:

ASME A112.18.1 / CSA B125.1
NSF 61 - Section 9
NSF 372 (Low Lead Content)
ANSI A117.1 (ADA)

equip Foodservice Accessories

equip by TS

2 Saddleback Cove, P.O. Box 1088
Travelers Rest, South Carolina 29690
Phone: 800.891.4808 Fax: 800.868.0084
equip.tsbrass.com

Drawn: MRC	Checked: LSA	Approved: JHB	Date: 06/11/21	Scale: NTS	Sheet: 2 of 2