# T&S BRASS AND BRONZE WORKS, INC.

2 Saddleback Cove / P.O. Box 1088
Travelers Rest, SC 29690

Travelers Rest, SC: 800-476-4103 • Simi Valley, CA: 800-423-0150 • Fax: 864-834-3518 • www.tsbrass.com

Model No.
**B-0156-05**

Item No.

ADA Compliant

This Space for Architect/Engineer Approval

Job Name_____Date_____

Model Specified_____ Quantity_____

Customer/Wholesaler_____

Contractor_____

Architect/Engineer_____

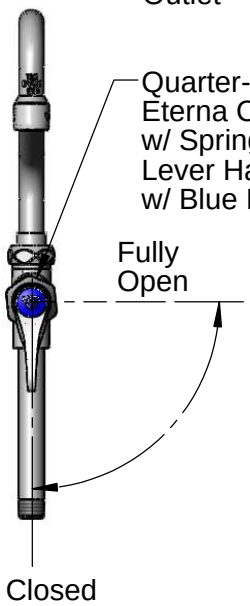


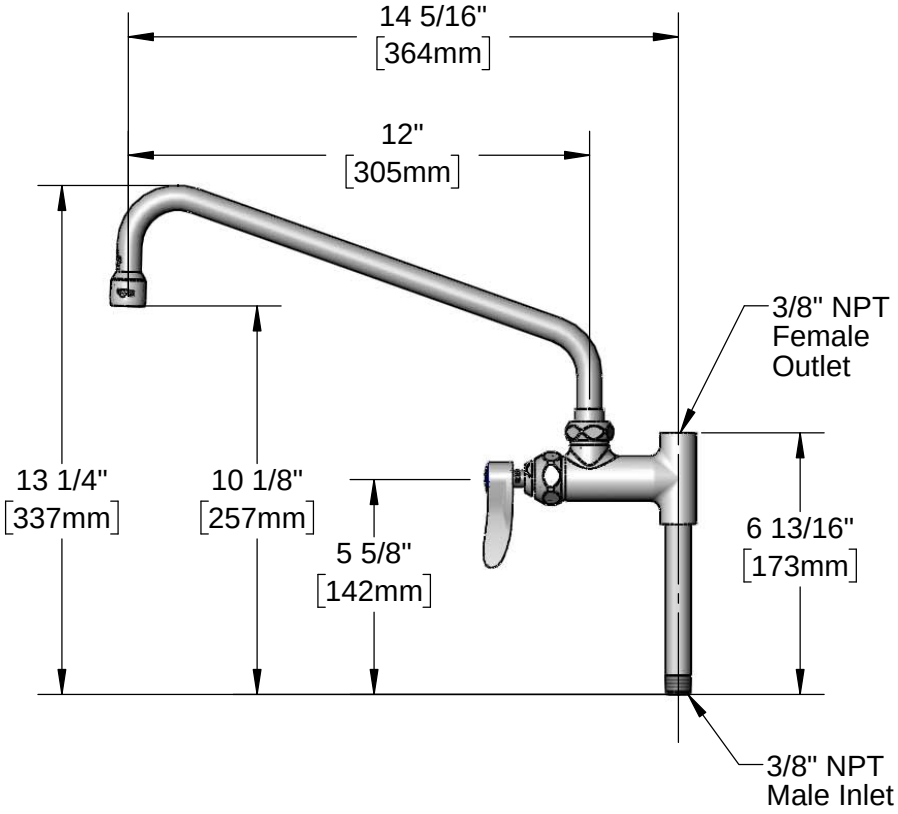


Notes:

1. The Add-On Faucet is an Addition to Pre-Rinse Units and is Installed in Outlets of Base Mixing Faucets of Units Before Fitting Riser Pipes

2. Lever Handle Controls Water On-Off Thru Nozzle Only. Pressure is Always "On" in the Riser Pipe (Controlled by Base Mixing Faucet)

Product Specifications:

Add-On Faucet w/ Quarter-Turn Eterna Cartridge w/ Spring Check, Lever Handle & 12" Swing Nozzle w/ Stream Regulator Outlet

Product Compliance:

ASME A112.18.1 / CSA B125.1
NSF 61 - Section 9
NSF 372 (Low Lead Content)
ANSI A117.1 (ADA)

| Drawn: MRC | Checked: JRM | Approved: JHB | Date: 08/04/17 | Scale: 1:5 | Sheet: 1 of 2 |
|---|---|---|---|---|---|

# T&S BRASS AND BRONZE WORKS, INC.

**2 Saddleback Cove / P.O. Box 1088**
**Travelers Rest, SC 29690**

Travelers Rest, SC: 800-476-4103 • Simi Valley, CA: 800-423-0150 • Fax: 864-834-3518 • www.tsbrass.com

Model No.
**B-0156-05**

Item No.

| ITEM NO. | SALES NO. | DESCRIPTION |
|---|---|---|
| 1 | B-PT | Full Flow Stream Regulator, 55/64-27 |
| 2 | 062X | 12" Swivel Nozzle |
| 3 | 009538-45 | Swivel Washer |
| 4 | 011429-45 | Swivel Sleeves (2) |
| 5 | 001074-45 | O-Ring |
| 6 | 000361-40 | Nipple, 3/8" NPT x 5" |
| 7 | 018506-19NS | Blue Button Index, Press-in |
| 8 | 000925-45 | Lab Handle Screw |
| 9 | 001638-45NS | Lever Handle (New Style) |
| 10 | 012443-40NS | Quarter-Turn Eterna Cartridge w/ Spring Check, RTC |
| 11 | 019639-40 | Quarter-Turn Eterna Cartridge RTC w/ Spring Check, Handle, Blue Index & Screw |

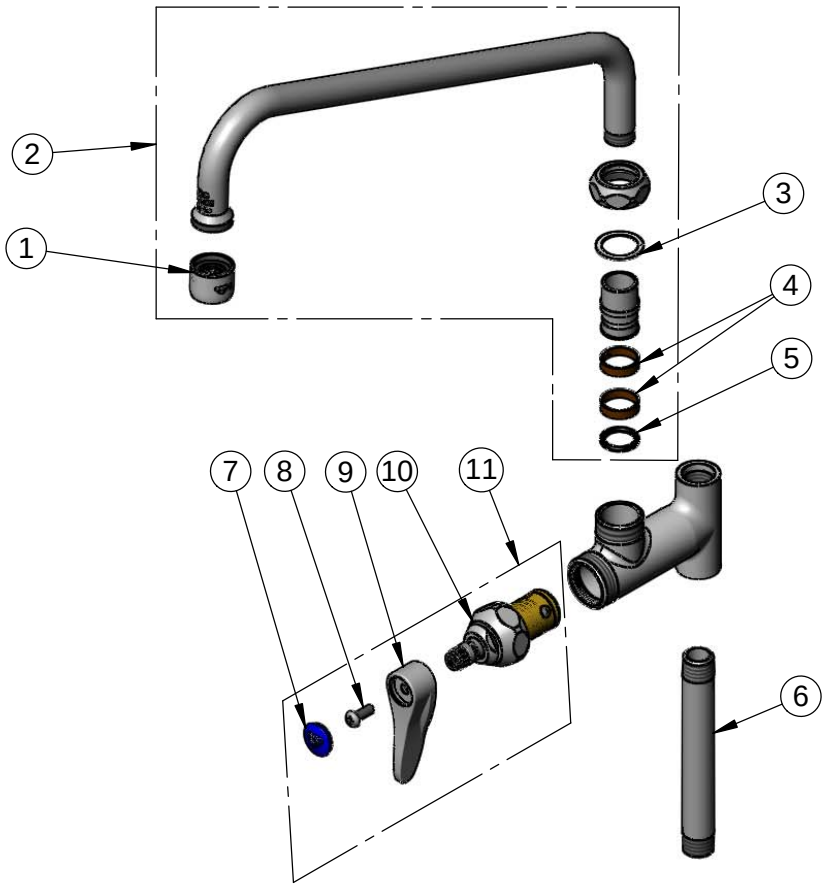


Product Specifications:

Add-On Faucet w/ Quarter-Turn Eterna Cartridge w/ Spring Check, Lever Handle & 12" Swing Nozzle w/ Stream Regulator Outlet

Product Compliance:

ASME A112.18.1 / CSA B125.1
NSF 61 - Section 9
NSF 372 (Low Lead Content)
ANSI A117.1 (ADA)

| Drawn: MRC | Checked: JRM | Approved: JHB | Date: 08/04/17 | Scale: NTS | Sheet: 2 of 2 |
|---|---|---|---|---|---|