# T&S BRASS AND BRONZE WORKS, INC.

2 Saddleback Cove / P.O. Box 1088
Travelers Rest, SC 29690

Travelers Rest, SC: 800-476-4103 • Simi Valley, CA: 800-423-0150 • Fax: 864-834-3518 • www.tsbrass.com

Model No.
**B-0651-POL**

Item No.

This Space for Architect/Engineer Approval

Job Name_____Date_____

Model Specified_____ Quantity_____

Customer/Wholesaler_____

Contractor_____

Architect/Engineer_____

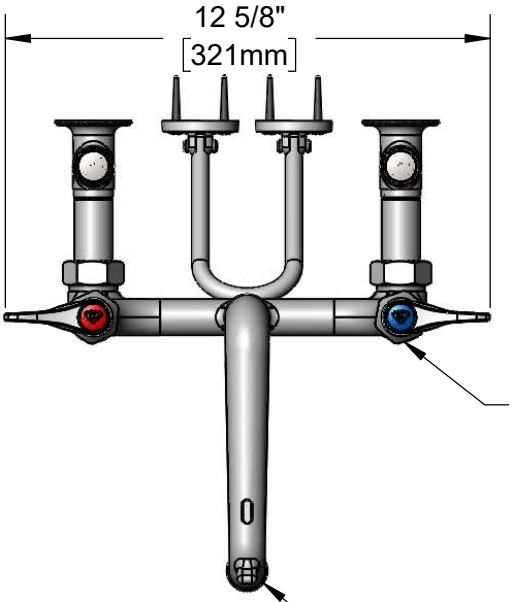


ADA Compliant

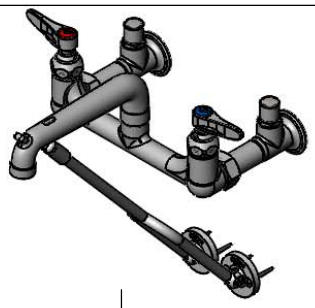

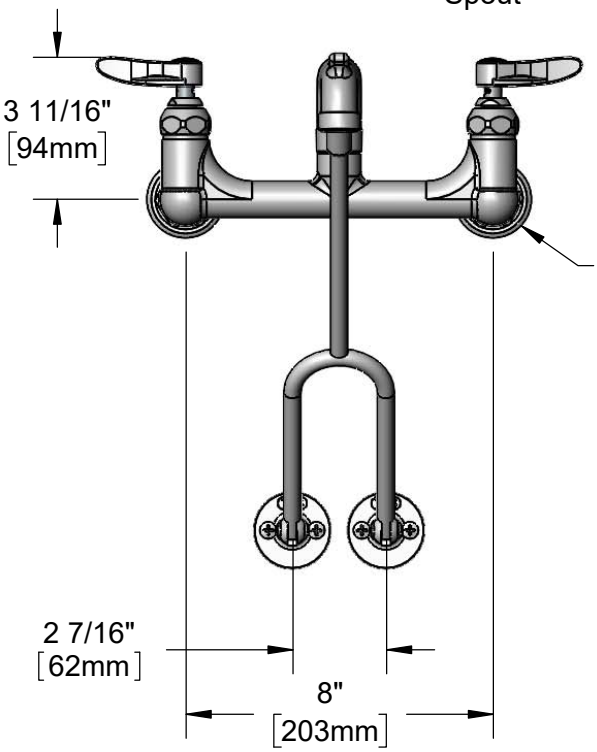


Adjustable From
7 3/4" to 8 1/4"
[197mm to 210mm]

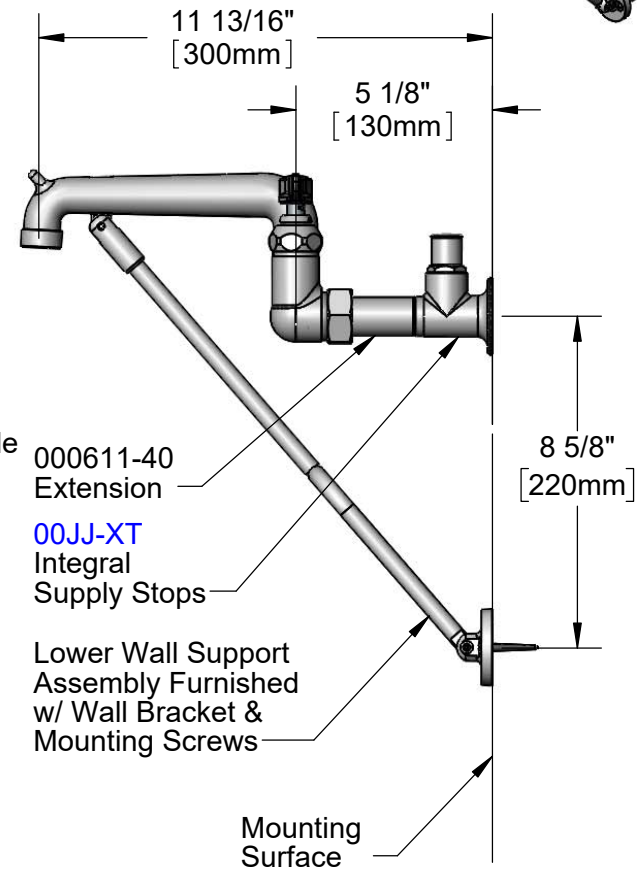


Product Specifications:

8" Wall Support Service Sink, Quarter-Turn Eterna Cartridge w/ Spring Checks, Polish Chrome Finish, Lever Handles, Lower Support Rod, 1/2" NPT Extended Inlets w/ Integral Stops & Plain End Outlet

Product Compliance:

ASME A112.18.1 / CSA B125.1
NSF 61 - Section 9
NSF 372 (Low Lead Content)
ANSI A117.1 (ADA)

| Drawn: KJG | Checked: JRM | Approved: JHB | Date: 01/11/23 | Scale: 1:5 | Sheet: 1 of 2 |
|---|---|---|---|---|---|

# T&S BRASS AND BRONZE WORKS, INC.

2 Saddleback Cove / P.O. Box 1088
Travelers Rest, SC 29690

Travelers Rest, SC: 800-476-4103 • Simi Valley, CA: 800-423-0150 • Fax: 864-834-3518 • www.tsbrass.com

Model No.
**B-0651-POL**

Item No.

| ITEM NO. | SALES NO. | DESCRIPTION |
|---|---|---|
| 1 | 009616-40 | Lower Support Rod Assembly w/ Mounting Screws |
| 2 | 016844-40 | Spout, B-0650 Chrome Polished |
| 3 | 012443-40NS | Quarter-Turn Eterna Cartridge w/ Spring Check, RTC |
| 4 | 002712-40NS | Quarter-Turn Eterna Cartridge w/ Spring Check, Handle, Red Index & Screw, RTC |
| 5 | 001193-19NS | Red Button Index, Press-in |
| 6 | 001638-45NS | Lever Handle (New Style) |
| 7 | 002534-25 | Close Nipple, 1/2" NPT |
| 8 | 018506-19NS | Blue Button Index, Press-in |
| 9 | 000925-45 | Lab Handle Screw |
| 10 | 002711-40NS | Quarter-Turn Eterna Cartridge w/ Spring Check, Handle, Blue Index & Screw, LTC |
| 11 | 012442-40NS | Quarter-Turn Eterna Cartridge w/ Spring Check, LTC |
| 12 | 001019-45 | Coupling Nut Washer |
| 13 | 000721-25 | Flange Coupling Nut |
| 14 | 000611-25 | Extension, 1 3/4" Long |
| 15 | 000763-20 | Seat |
| 16 | 00JJ-XT | 1/2" NPT Female Thread Inlet Assembly w/ Integral Stop & Extension |
| 17 | 002892-45 | Service Stop Spindle Assembly w/ Cap |
| 18 | 001605-45 | Cap |
| 19 | 001802-45 | Handle, Supply Stop "T" |
| 20 | 002432-45 | Screw, Tee Handle |

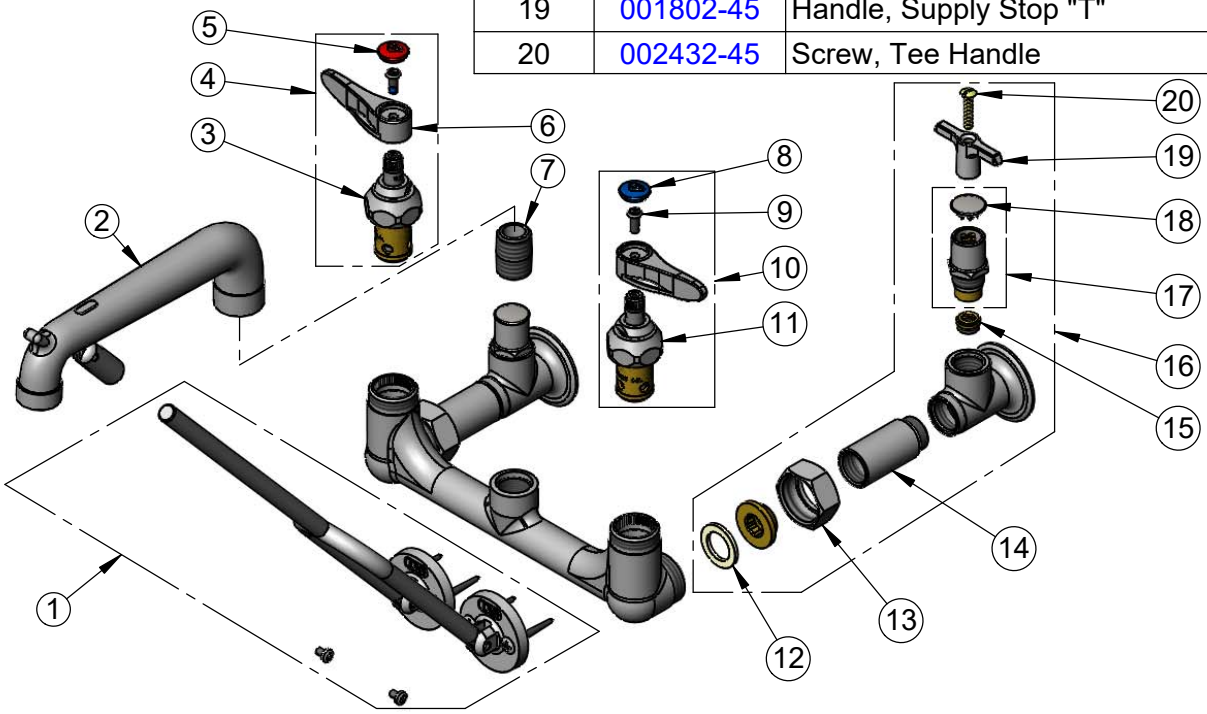


Product Specifications:
8" Wall Support Service Sink, Quarter-Turn Eterna Cartridge w/ Spring Checks, Polish Chrome Finish, Lever Handles, Lower Support Rod, 1/2" NPT Extended Inlets w/ Integral Stops & Plain End Outlet

Product Compliance:
ASME A112.18.1 / CSA B125.1
NSF 61 - Section 9
NSF 372 (Low Lead Content)
ANSI A117.1 (ADA)

| Drawn: KJG | Checked: JRM | Approved: JHB | Date: 01/11/23 | Scale: NTS | Sheet: 2 of 2 |
|---|---|---|---|---|---|