T&S BRASS AND BRONZE WORKS, INC.

2 Saddleback Cove / P.O. Box 1088
Travelers Rest, SC 29690

Travelers Rest, SC: 800-476-4103 • Simi Valley, CA: 800-423-0150 • Fax: 864-834-3518 • www.tsbrass.com

Model No.

B-0665-BSTR

Item No.

ADA Compliant

This Space for Architect/Engineer Approval

Job Name_____Date_____

Model Specified_____ Quantity_____

Customer/Wholesaler_____

Contractor_____

Architect/Engineer_____

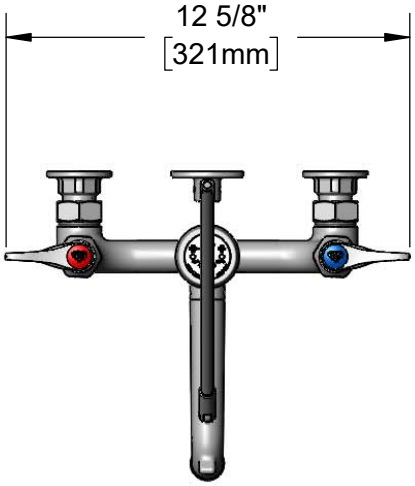

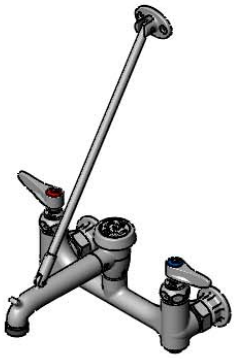

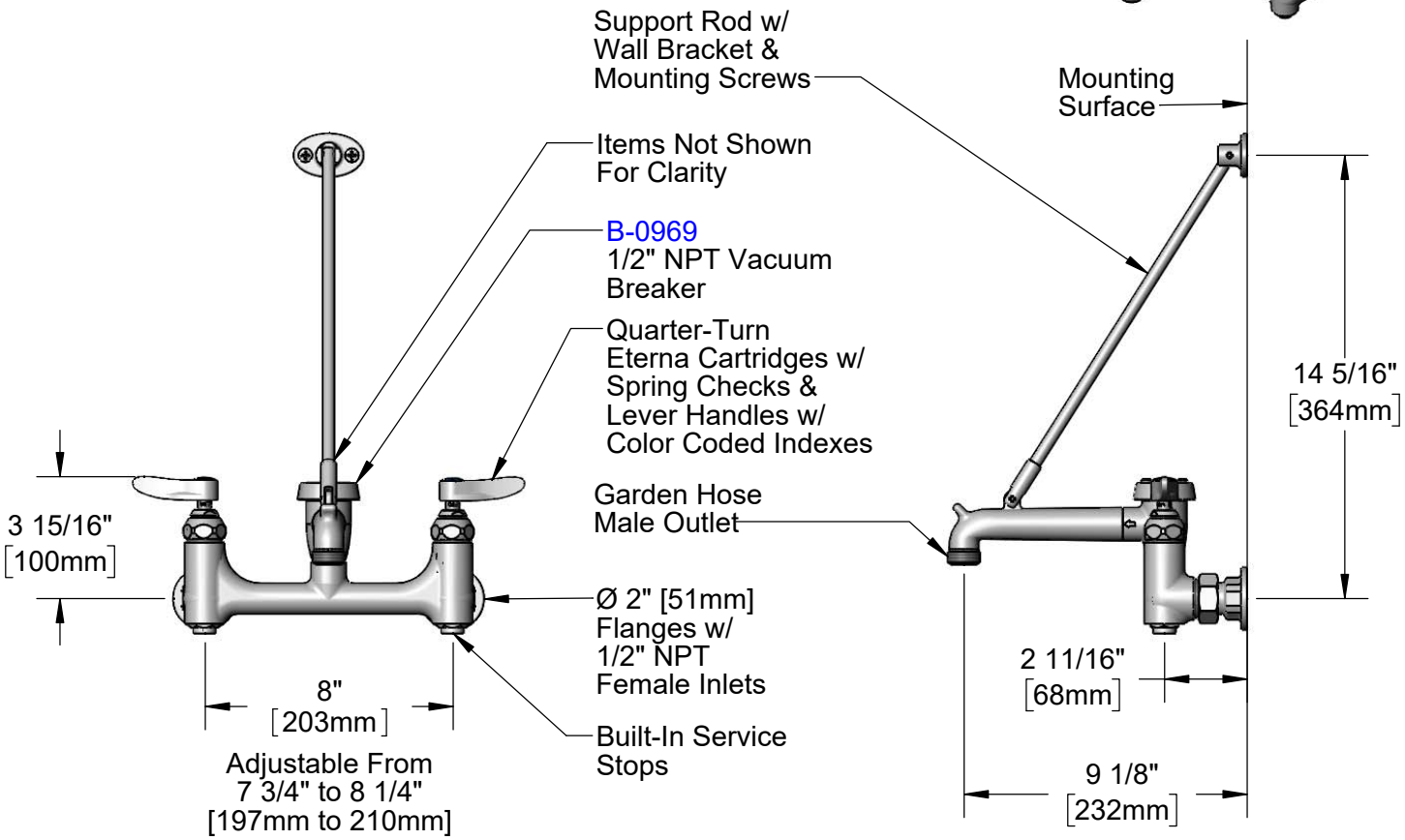

Product Specifications:

8" Wall Mount Service Sink, Quarter-Turn Eterna Cartridges w/ Spring Checks, Lever Handles, Upper Support Rod, Garden Hose Male Outlet, Built-In Service Stops, Rough Chrome Finish, 1/2" NPT Vacuum Breaker & 1/2" NPT Female Inlets

Product Compliance:

ASME A112.18.1 / CSA B125.1
NSF 61 - Section 9
NSF 372 (Low Lead Content)
ANSI A117.1 (ADA)
ASSE 1001 (VB)

Drawn: KJG	Checked: JRM	Approved: JHB	Date: 11/19/19	Scale: 1:6	Sheet: 1 of 2

T&S BRASS AND BRONZE WORKS, INC.

2 Saddleback Cove / P.O. Box 1088
Travelers Rest, SC 29690

Travelers Rest, SC: 800-476-4103 • Simi Valley, CA: 800-423-0150 • Fax: 864-834-3518 • www.tsbrass.com

Model No.
B-0665-BSTR

Item No.

ITEM NO.	SALES NO.	DESCRIPTION
1	009545-25	Spout w/ Male GH Outlet & Upper Clevis - Rough Chrome
2	009546-40	Upper Support Rod
3	001193-19NS	Red Button Index, Press-in
4	B-0969	1/2" NPT Vacuum Breaker
5	002534-25	Close Nipple, 1/2" NPT
6	001638-45NS	Lever Handle (New Style)
7	002712-40NS	Quarter-Turn Eterna Cartridge w/ Spring Check, Handle, Red Index & Screw, RTC
8	012443-40NS	Quarter-Turn Eterna Cartridge w/ Spring Check, RTC
9	018506-19NS	Blue Button Index, Press-in
10	000925-45	Lab Handle Screw
11	002711-40NS	Quarter-Turn Eterna Cartridge w/ Spring Check, Handle, Blue Index & Screw, LTC
12	012442-40NS	Quarter-Turn Eterna Cartridge w/ Spring Check, LTC
13	001019-45	Coupling Nut Washer
14	00AA	1/2" NPT Female Eccentric Flange
15	163A	Built-in Service Stop

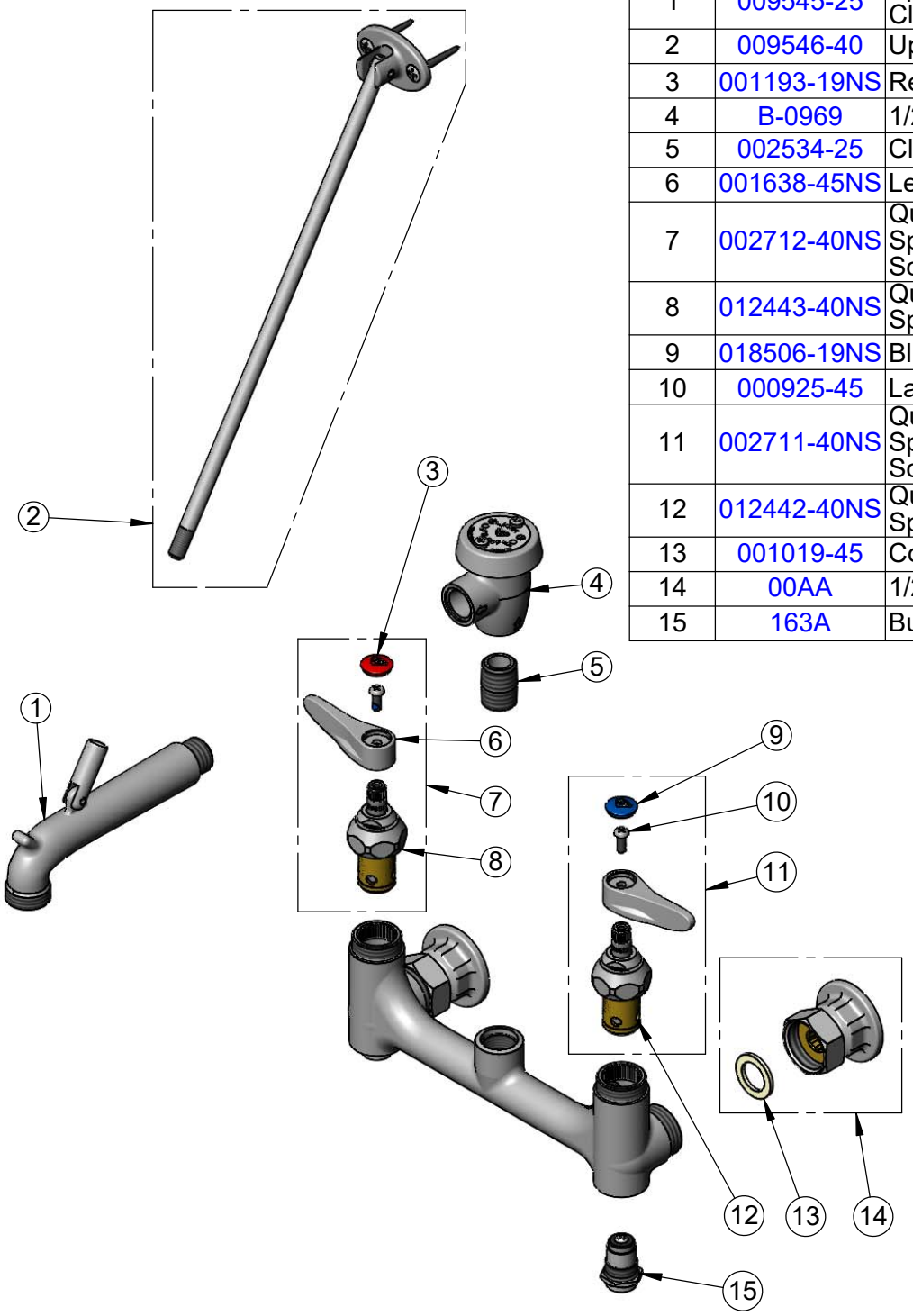

Product Specifications:

8" Wall Mount Service Sink, Quarter-Turn Eterna Cartridges w/ Spring Checks, Lever Handles, Upper Support Rod, Garden Hose Male Outlet, Built-In Service Stops, Rough Chrome Finish, 1/2" NPT Vacuum Breaker & 1/2" NPT Female Inlets

Product Compliance:

ASME A112.18.1 / CSA B125.1
NSF 61 - Section 9
NSF 372 (Low Lead Content)
ANSI A117.1 (ADA)
ASSE 1001 (VB)

Drawn: KJG	Checked: JRM	Approved: JHB	Date: 11/19/19	Scale: NTS	Sheet: 2 of 2