T&S BRASS AND BRONZE WORKS, INC.

2 Saddleback Cove / P.O. Box 1088
Travelers Rest, SC 29690

Travelers Rest, SC: 800-476-4103 • Simi Valley, CA: 800-423-0150 • Fax: 864-834-3518 • www.tsbrass.com

Model No.
EC-3104-VF05

Item No.

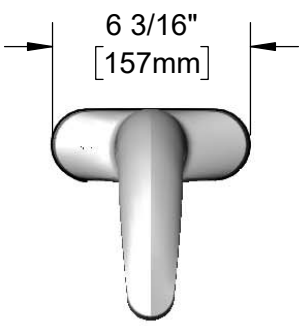

T&S ChekPoint™

ADA Compliant

This Space for Architect/Engineer Approval

Job Name_____Date_____

Model Specified_____ Quantity_____

Customer/Wholesaler_____

Contractor_____

Architect/Engineer_____

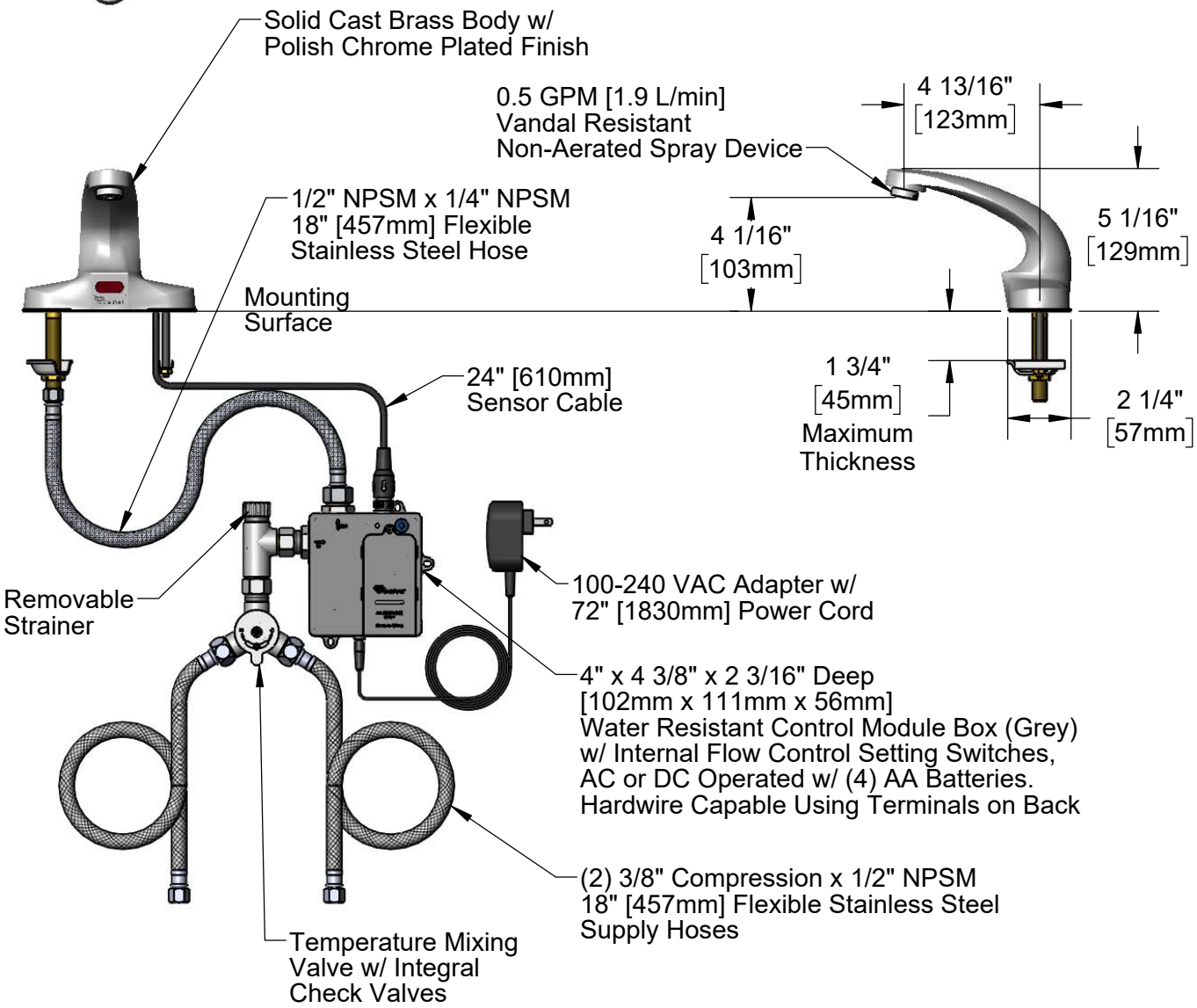

Rough-In Requirement:
(2) ∅1" [25mm] Mounting Holes on 4" [102mm] Centers

Product Specifications:

Chrome Plated Brass Electronic Faucet: 4" c/c Deck Mount, Cast Spout w/ 0.5 GPM VR Non-Aerated Spray Device, AC/DC Control Module w/ Internal Flow Control Setting Switches, Temperature Control Mixing Valve w/ Integral Check Valves & 18" Flexible Stainless Steel Supply Hoses

Product Compliance:

ASME A112.18.1 / CSA B125.1
NSF 61 - Section 9
NSF 372 (Low Lead Content)
ANSI A117.1 (ADA)
UL 1951

Drawn: DMH	Checked: JRM	Approved: JHB	Date: 04/05/22	Scale: 1:6	Sheet: 1 of 2

T&S BRASS AND BRONZE WORKS, INC.

2 Saddleback Cove / P.O. Box 1088
Travelers Rest, SC 29690

Travelers Rest, SC: 800-476-4103 • Simi Valley, CA: 800-423-0150 • Fax: 864-834-3518 • www.tsbrass.com

Model No.
EC-3104-VF05

Item No.

ITEM NO.	SALES NO.	DESCRIPTION
1	B-0199-08-N05	0.5 GPM VR Spray Device, 13/16-27 Male
2	015425-45	Vandal Resistant Key
3	016297-45	Inlet Hose, Faucet, 1/2" NPSM-F x 1/4" NPSM-F
* 4	019174-45	Sensor Cable Assembly
* 5	019944-45	ChekPoint Control Module w/ Filter Tee
* 6	5EF-0002C	AC Adapter - US Plug
7	5EF-0005	Supply Hose, 9/16-24 Female x 1/2" NPSM
8	5EF-0006	Temperature Mixing valve
9	EC-FILTER	Replacement Filter

* For Versions Prior to 2021, Consult with T&S Customer Service

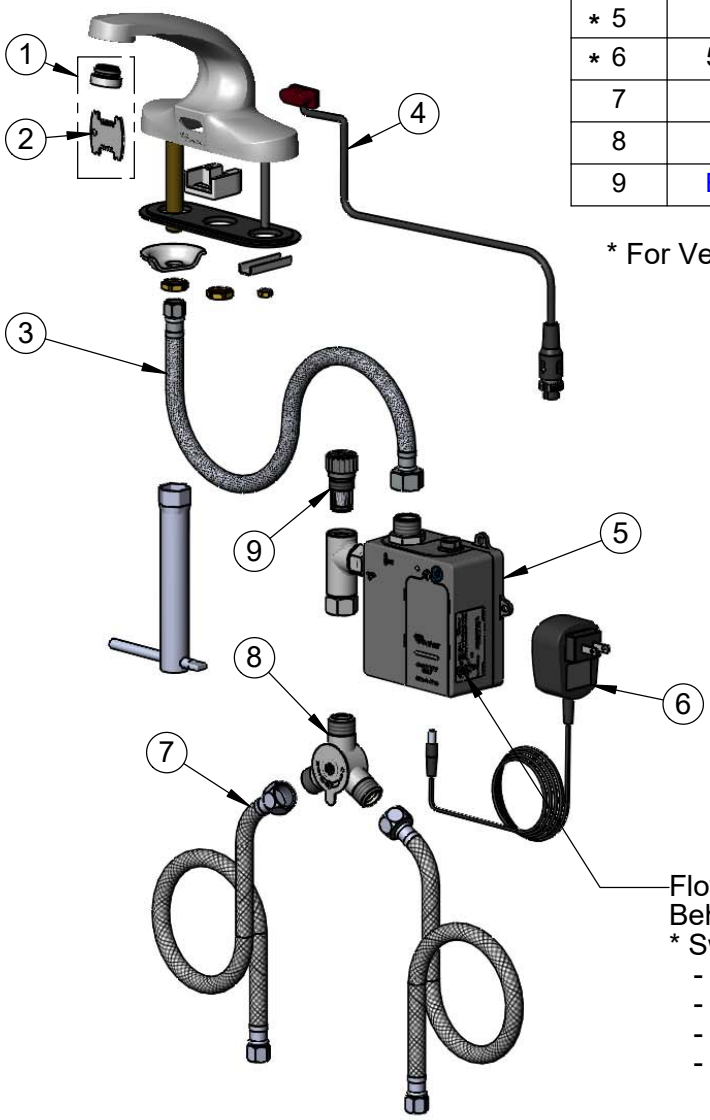

A Maximum of (8) ChekPoint Faucets can be Hardwire Connected and Powered by EC-HARDWIRE ChekPoint Hardwire AC Transformer. (Sold Separately)

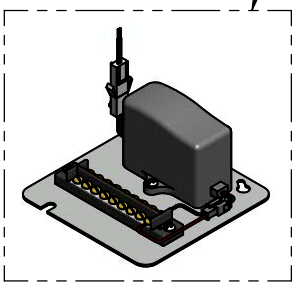

Flow Control DIP Switches are Located Behind Battery Compartment Cover.
* Switches are Set to DEFAULT Position:
- Auto Time Out = 15 Seconds
- Shut Off Delay = 1 Second
- Auto Flush = OFF
- Metering Mode = OFF

*Available Water Flow Control Selections:
- Auto Time Out: 15 sec, 30 sec, 45 sec, 60 sec, 3 min, 20 min
- Shut Off Delay: 1 sec, 10 sec, 15 sec, 30 sec
- Auto Flush (30 Seconds After Every 12 Inactive Hours): ON or OFF
- Metering Mode: ON or OFF

Product Specifications:

Chrome Plated Brass Electronic Faucet: 4" c/c Deck Mount, Cast Spout w/ 0.5 GPM VR Non-Aerated Spray Device, AC/DC Control Module w/ Internal Flow Control Setting Switches, Temperature Control Mixing Valve w/ Integral Check Valves & 18" Flexible Stainless Steel Supply Hoses

Product Compliance:

ASME A112.18.1 / CSA B125.1
NSF 61 - Section 9
NSF 372 (Low Lead Content)
ANSI A117.1 (ADA)
UL 1951

Drawn: DMH	Checked: JRM	Approved: JHB	Date: 04/05/22	Scale: NTS	Sheet: 2 of 2