EXPLODED VIEW: WFAE55F/FC

WFAE-55F (MANUAL CONTROLS) ELECTRICAL COMPONENTS

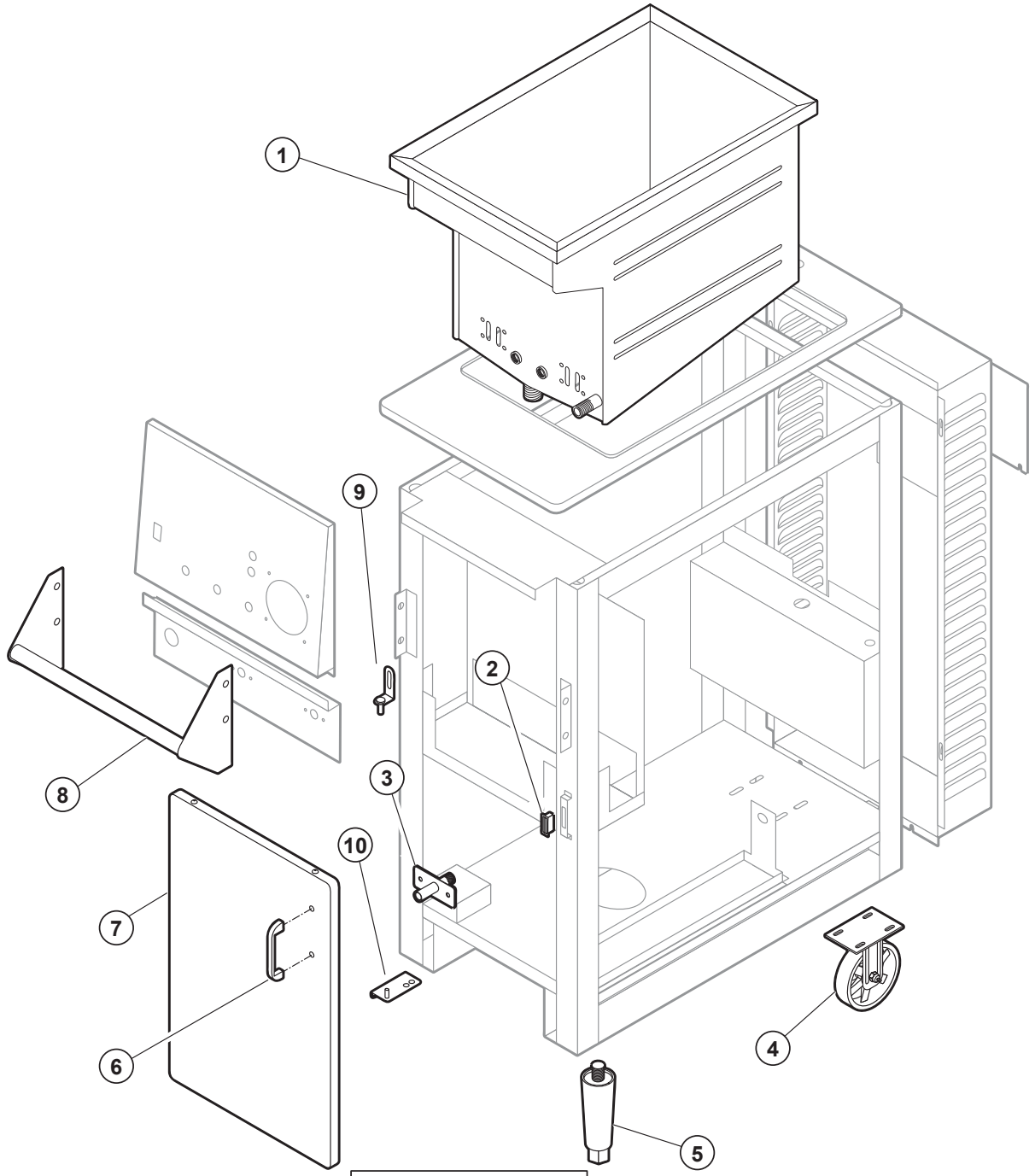

NOT SHOWN
PANEL, RIGHT SIDE E7-46722
PANEL, LEFT SIDE E7-46723

Model: WFAE55F/FC
Free Standing Electric Fryer
Cabinet Components
PL363

IL1764 Rev. C 1/02/15

PARTS LIST: WFAE55F/FC

WFAE-55F/FC ELECTRIC OPEN FRYPOT CABINET COMPONENTS			
Fig No	**Part No**	**Qty**	**Description**
1	E7-49729	1	KETTLE ASSY WFAE55
	M3-301462		KETTLE ASSY WVAE55
2	2R-46502	1	MAGNET DOOR
3	E7-46720	1	SUCTION LINE FITTING ASSY
4	2P-47011	2	CASTER RIGID 5”
5	2A-46480	2	LEG 6-7 1/4” ADJUSTABLE
6	2R-38668	1	HANDLE DOOR
7	E7-41713	1	DOOR ASSY WFE WFAE30/WFPE
8	E7-300527	1	GUARD ROD ASSY WFAE55/30
9	E7-46422	1	BRKT HINGE DOOR TOP
10	E7-46423	1	BRKT HINGE DOOR BOTTOM
NI	E7-46722	1	PANEL SIDE RT WFAE55/30
NI	E7-46723	1	PANEL SIDE LF WFAE55/30

EXPLODED VIEW: WFAE55F (Manual Controls)

WFAE-55F (MANUAL CONTROLS) ELECTRICAL COMPONENTS

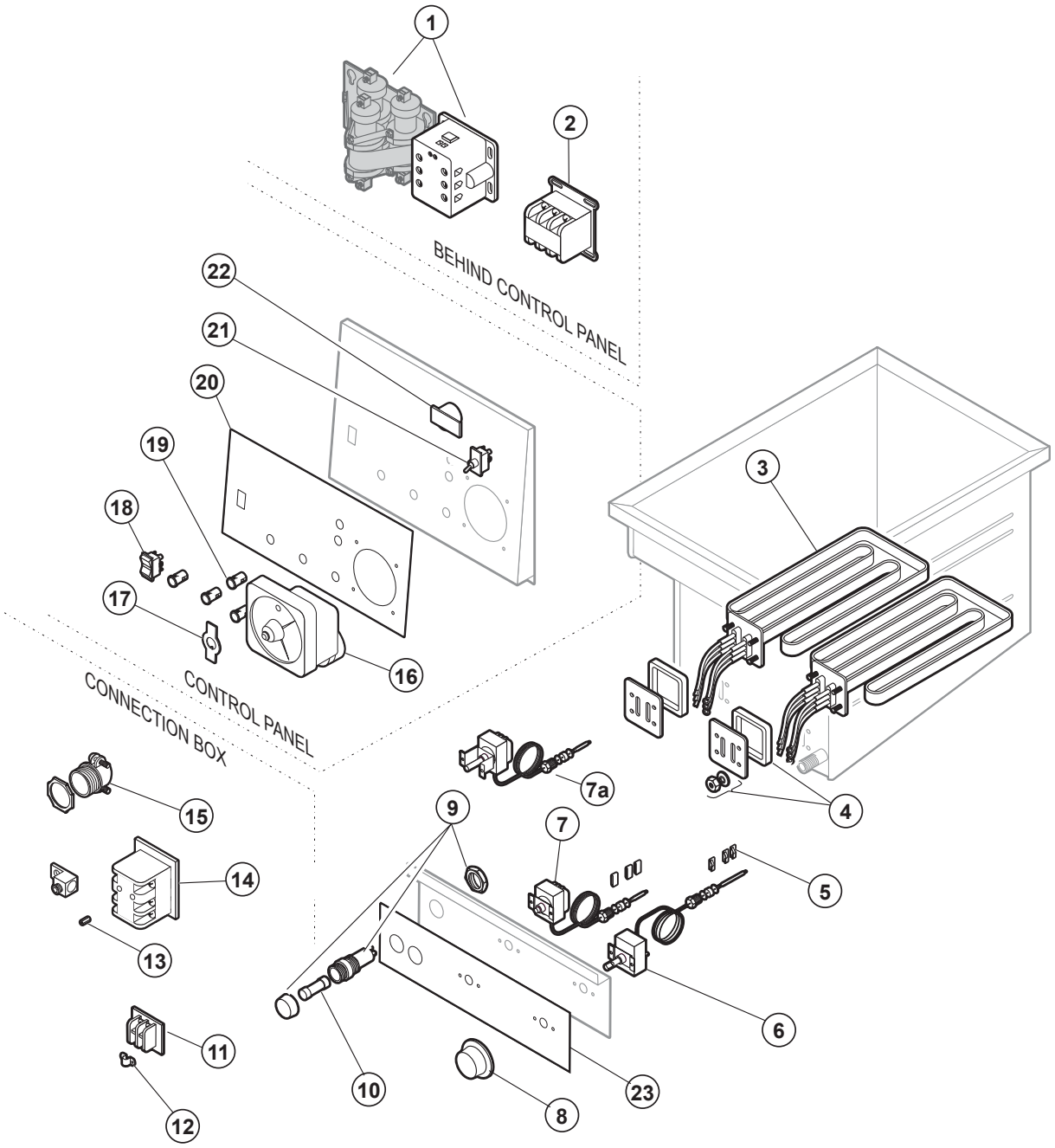

Model: WFAE55F
Free Standing Electric Fryer
Electrical Components (Manual Controls)
PL363

IL1765 Rev. C 10/19/12

PARTS LIST: WFAE55F (Manual Controls)

WFAE55F ELECTRIC OPEN FRYPOT ELECTRICAL COMPONENTS (MANUAL CONTROL)				
Fig No	Part No	Qty	Description	Application
1	DD-306782	1	RELAY ESAFE-CE 208/240V	
2	WS-57779	1	CONTACTOR 3POLE 208V 40A	
3	E7-300009	2	ELEM ASSY 208V 8.5KW	
	2N-300013		ELEM ASSY 240V 8.5KW	
4	WS-66863	1	GASKET KIT ELEM	
5	2C-49689	6	CLAMP BULB SS	
6	WS-66688	1	THERMO TEMP CTRL	
7	WS-66663	1	THERMO HIGH LIMIT	Prior to 2009
7a	2T-307574	1	THERMO SAF MAN RESET	
8	2R-45653	1	KNOB CONTROL 2.25 OD .25	
9	2E-34769	2	FULEHLDR HPG-EE 10A 240V	
10	2E-34768	2	FUSE SC-10 10A 300V	
11	2E-33068	1	TERM BLOCK 2POLE	
12	2E-34005	1	JUMPER FLAME SENSOR TERM	
13	2C-41974	2	NUT 8-32 HEX 7/8 LONG ALU	
14	WS-50131	1	TERM BLOCK KIT (RETRO)	
15	2K-300102	1	STRAIN RELIEF INPT .375-1	
16	2P-Z13854	1	TIMER 40MIN 240V SPDT	
17	2E-33192	1	PANEL, ON & OFF SWITCH	
18	2E-49550	1	SWITCH ROCKER POWER	
19	2J-30516	4	LIGHT SIGNAL AMBERR	
20	2M-302391	1	FACEPLATE CONTROL WELLS	
21	2E-44904	1	SWITCH TOGGLE W/SEAL	
22	2J-44834	1	BUZZER 220V ROHS	
23	2M-Z13237	1	GRAPHIC LOWER 55F	

EXPLODED VIEW: WFAE55FC (Electronic Control)

WFAE-55FC (SOLID-STATE CONTROLLER) ELECTRICAL COMPONENTS

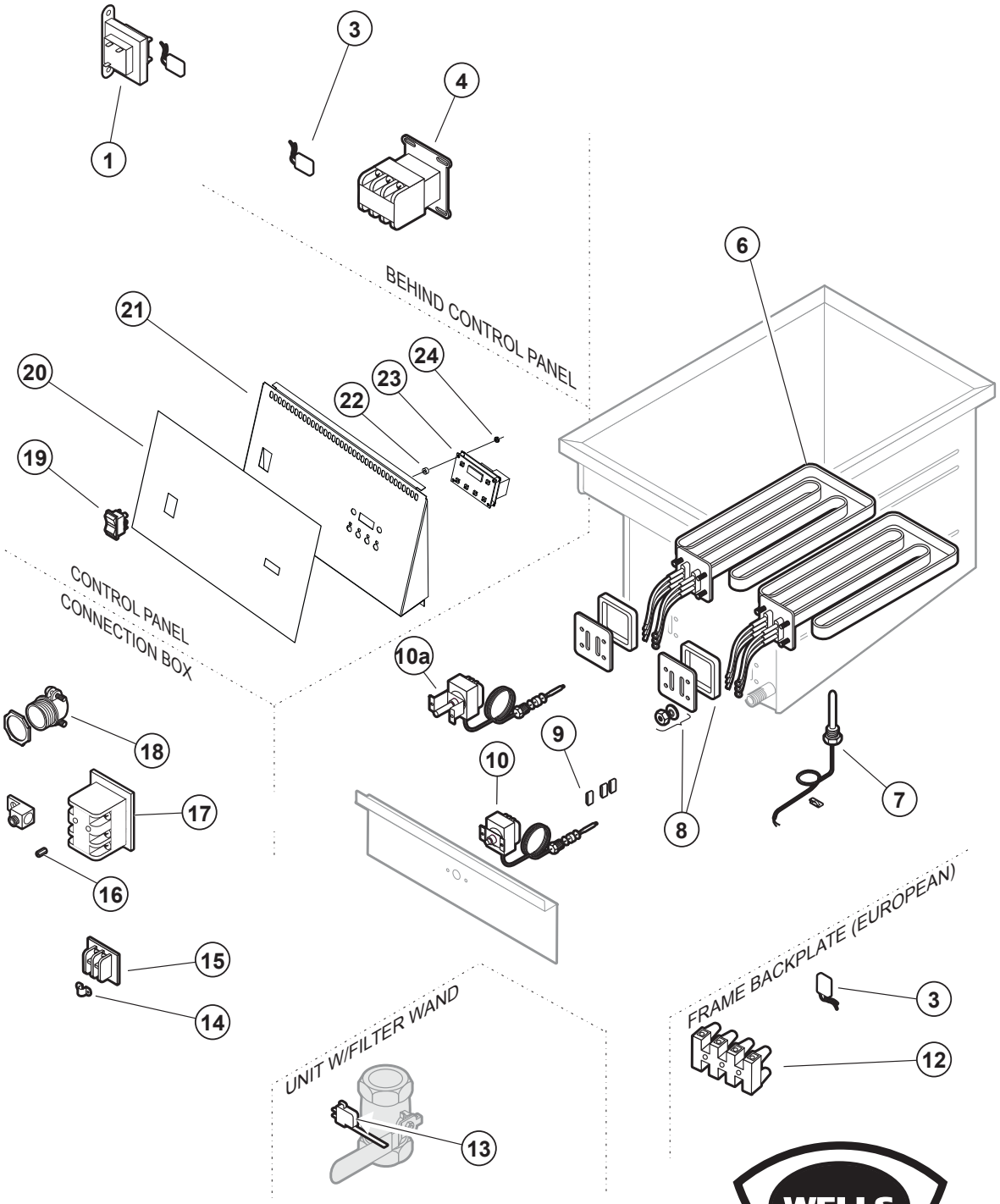

Model: WFAE55FC
Free Standing Electric Fryer
Electrical Components (Solid-State Controller)
PL363

IL2584 Rev. A 11/15/12

PARTS LIST: WFAE55FC (Electronic Control)

WFAE55FC ELECTRIC OPEN FRYPOT ELECTRICAL COMPONENTS (SOLID STATE CONTROL)				
Fig No	**Part No**	**Qty**	**Description**	
1	2E-301454	1	TRANSFORMER 208/240V 24V	
3	2E-300688	1/3	SPARK QUENCHER, 380-415V ONLY	
4	WS-57779	2	CONTACTOR 3POLE 208V 40A	
	WS-57780		CONTACTOR 3POLE 240V 40A	
6	2N-306258UL	2	ELEM 208V 5.67KW WFAE, 1 PH	
	E7-300009		ELEM ASSY 208V 8.5KW, 3 PH	
	2N-306259UL		ELEM 240V 5.67KW WFAE, 1 PH	
	2N-300013		ELEM ASSY 240V 8.5KW WFAE, 3PH	
7	2J-301465	1	THERMISTOR 91K W/LEADS	
8	WS-66863	2	GASKET KIT, ELEMENT	
9	2C-49689	6	CLAMP BULB SS F49RT F58RT	
10	WS-66663	1	THERMO HI-LIMIT	Prior to 2009
10a	WS-66663	1	THERMO SAF MAN RESET	
12	2E-40310	1	TERM BLOCK 4POLE 75AMP	
13	2E-44887	1	SWITCH MICRO 120V 15A	
14	2E-34005	1	JUMPER FLAME SENSOR TERM	
15	WS-53068	1	TERM BLOCK 2POLE	
16	2C-41974	2	NUT 8-32 HEX 7/8 LONG ALU	
17	WS-50131	1	TERM BLOCK KIT (RETRO)	
18	2K-300102	1	STRAIN RELIEF 1NPT .375-1	
19	2E-49550	1	SWITCH ROCKER POWER	
20	2M-Z16212	1	FACEPLATE CONTROLLER 55FC	
21	E7-Z16328	1	CONTROL PANEL	
22	2K-Z1530	4	SPACER	
23	2J-Z16356	1	CONTROL CTT	
24	2C-2553	4	NUT 6-32 HEX STL NO	

EXPLODED VIEW: WFAE55F/FC

WFAE-55F/FS FILTER PUMP COMPONENTS

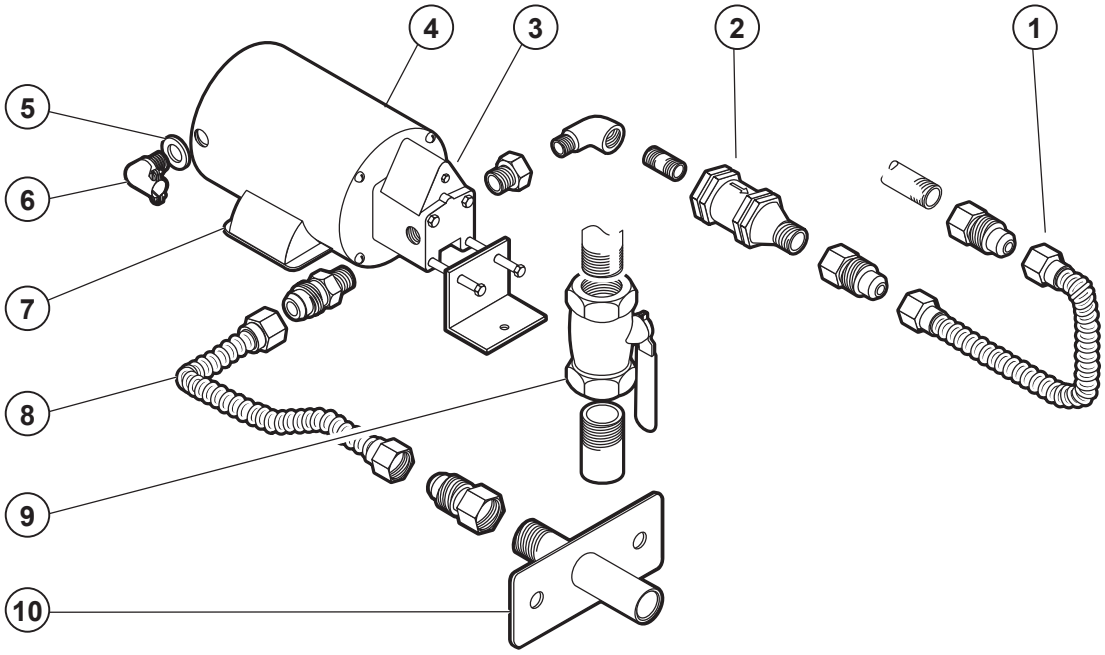

WFAE-55FS WAND COMPONENTS

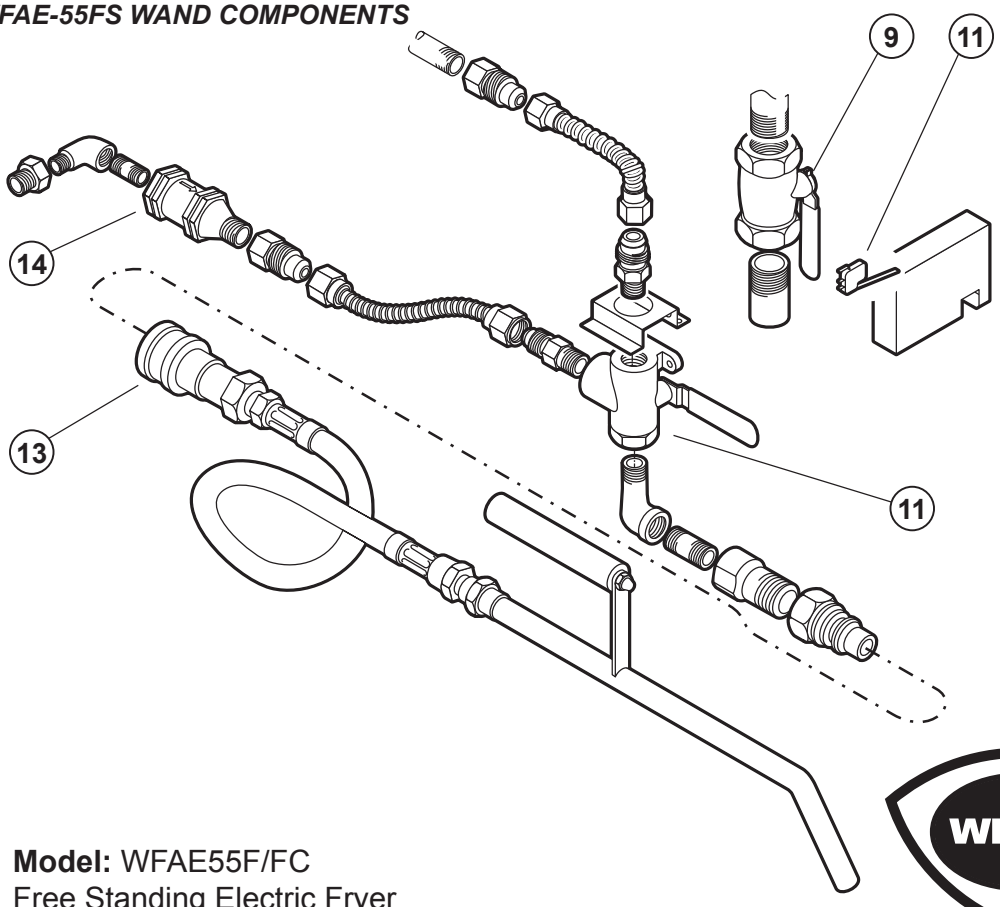

Model: WFAE55F/FC
Free Standing Electric Fryer
Wand & Filter Pump Components
PL363

IL1767 Rev. C 10/19/12

PARTS LIST: WFAE55F/FC

WFAE-55F/FC ELECTRIC OPEN FRYPOT WAND & FILTER PUMP COMPONENTS			
Fig No	**Part No**	**Qty**	**Description**
1	2J-302283	1	HOSE ASSY SS .6 OD X 14
2	2V-46692	1	VALVE CHECK 3/8 NPT WF/WVA
3	WS-501231	1	PUMP ASSY
4	WS-501205	1	MOTOR FILTER 1P 115/230V
5	2I-Z12311	1	GASKET-FIBER WASHER
6	2K-3396X	1	FTG FLEX CONDUIT 90X3/8
7	WS-501205	1	MOTOR FILTER 1P 115/230V
8	2J-302287	1	HOSE ASSY SS 3/4 OD X 16
9	2V-49816	1	VALVE BALL 1-1/4 1500PSIG
10	E7-46720	1	SUCTION LINE FTING ASSY
11	2E-44887	1	SWITCH MICRO 120V 15A
12	DD-304309	1	VALVE 3 WAYS SS
13	DD-304734	1	OIL WAND & HOSE ASSY
14	2V-46692	1	VALVE CHECK 3/8NPT WF/WVA

EXPLODED VIEW: WFAE55F/FC

WFAE-55F/FC AUTO-LIFT COMPONENTS

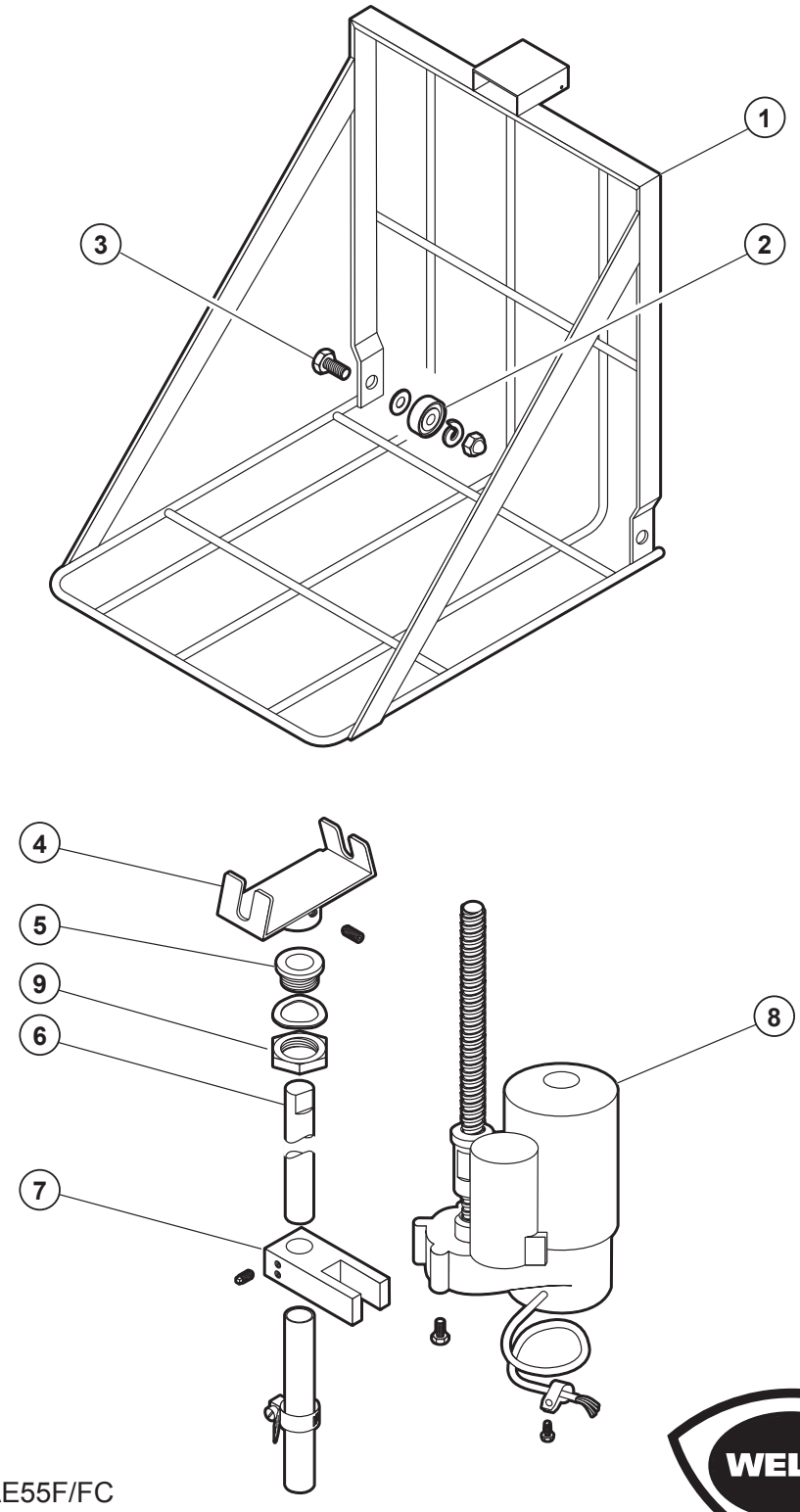

Model: WFAE55F/FC
Free Standing Electric Fryer
AUTO-LIFT COMPONENTS
PL363

IL1769 Rev. C 10/19/12

PARTS LIST: WFAE55F/FC

WFAE-55F/FC ELECTRIC OPEN FRYPOT AUTO-LIFT COMPONENTS			
Fig No	**Part No**	**Qty**	**Description**
1	E7-49961	1	CRADLE LIFT BASKET WFAE55
2	2P-300031	2	BEARING ROLLER .750D X .2
3	2C-41048	2	SCREW 1/4-20-3/4
4	DD-300037	1	PIVOT CRADLE WFAE55
5	2K-49972	1	BUSHING LIFT ROD WFAE55
6	2A-300542	1	ROD LIFT MOTOR WFAE55
7	2V-49812	1	YOKE ROD LIFT MOTOR WFAE55
8	2U-300513	1	MOTOR LIFT 1/10HP 230V 50
9	2C-49843	1	NUT 1-14 FINISH HEX JAM

EXPLODED VIEW: WFAE55F/FC

WFAE-55F/FS ACCESSORIES & REMOVABLE COMPONENTS

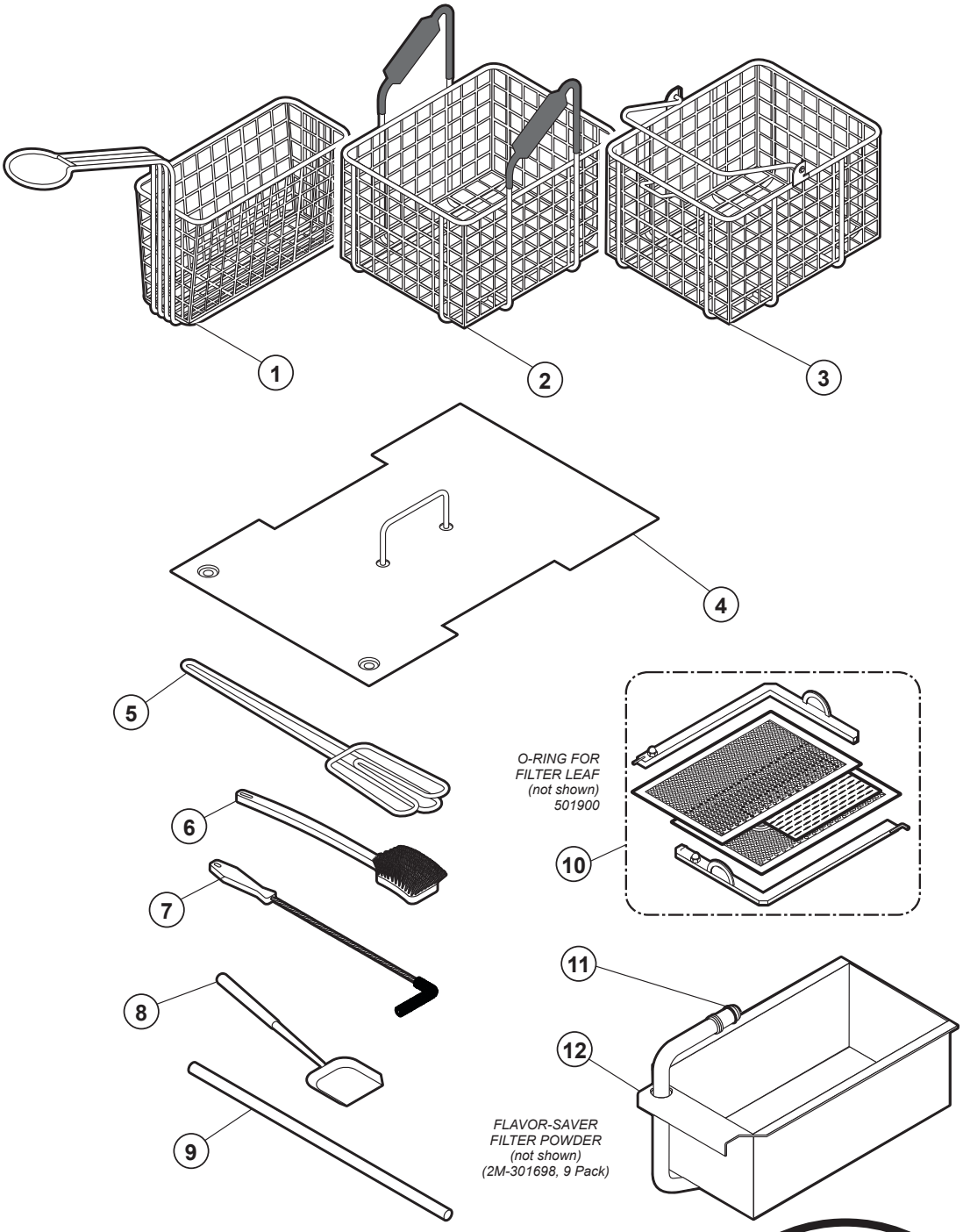

Model: WFAE55F/FC
Free Standing Electric Fryer
ACCESSORIES & REMOVABLE COMPONENTS
PL363

IL1768 Rev. B 10/19/12

PARTS LIST: WFAE55F/FC

WFAE-55F/FC ELECTRIC OPEN FRYPOT ACCESSORIES & REMOVABLE COMPONENTS			
Fig No	**Part No**	**Qty**	**Description**
1	2B-305097	2	BASKET WIRE TWIN WFAE55
2	2B-301667	1	BASKET FRYER WFA55
3	2B-306245	1	BASKET FRYER WFAE WVAE
4	E7-300235	1	COVER KETTLE WFAE55
5	2B-302203	1	PADDLE STIRRING CHICKEN
6	2P-302204	1	BRUSH CLEANING FRYERS
7	2P-46479	1	BRUSH CLEANING ELEMENT
8	2R-301901	1	SHOVEL STAINLESS STEEL
9	2C-49752	1	DOWEL CLEANOUT DRAIN
10	2I-301847	1	FILTER LEAF
11	2I-46474	5	O-RING .5 ID X .63 OD VIT
12	E7-301845	1	RESERVOIR ASSY WFAE55
NI	WS-501900	1	O-RING FILTER LEAF
NI	2M-301698	1	POWDER FILTER 9 PACK WFAE